OVERRUN DEVICE TYPE 161 R/Q AK 160

ETI- No. 811519 (Specify the order with the ETI No.)

AL-KO Spare Parts

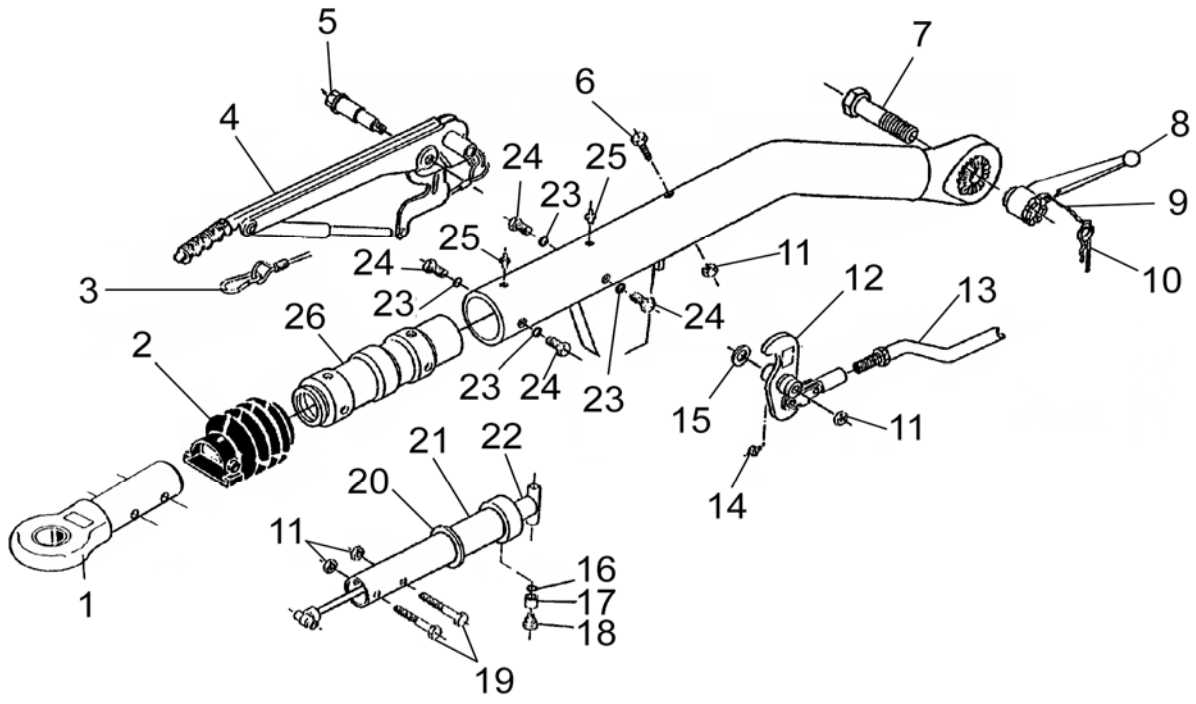

Item	Description	Drawing No.
1	DRAWBAR EYE DIN 161/251S	357419
2	BELLOW	366356
3	BRAKE AWAY CABLE	368605
4	HAND BRAKE LEVER CPL	220096
5	BEARING BOLT M12X1,5X106,5	581145
6	BOLT HEX M12X110 DIN931	700313
7	BOLT HEX M24	2025780004
8	LOCKING HANDLE M24X1,5	2488350002
9	CHAIN	2020920004
10	SPRING COTTER	701970
11	NUT HEX M12 DIN980	704065
12	BELL CRANK UNI 90:27	380487
13	BOWDEN CABLE 550/840	217738
14	GREASE NIPPLE AS 6X1 CONUS	700203
15	WASHER 19,2X34X2	370693
16	FAN WASHER A8,4 DIN6798 *	703466
17	BUSH *	583043
18	BEARING BOLT *	583042
19	BOLT HEX M12X60 DIN931	702749
20	PROFILRING RUBBER	371372
21	DRAW TUBE WELDED	380507
22	SHOCK ABSORBER	370558
23	FAN WASHER A10,5 DIN6798	704095
24	BOLT HEX M10X16 DIN933	703783
25	GREASE NIPPLE AS 8X1 CONUS	368461

Item	Description	Drawing No.
26	BEARING CARTRIDGE DRILLED	583046

*** not at rotatable model**

Drawbar with connection drilling customer-specific (order see drawing no. OD)

OD = overrun device

provided	ETI-No.	changed	Change No.	Reason of the change	Revisons-No.
25.02.08	811519_en	08.07.2009	FREIGABE		A