OVERRUN DEVICE 161S-SQUARE 70 ROTATABLE

ETI- No. 811464 (Specify the order with the ETI No.)

Spare Parts

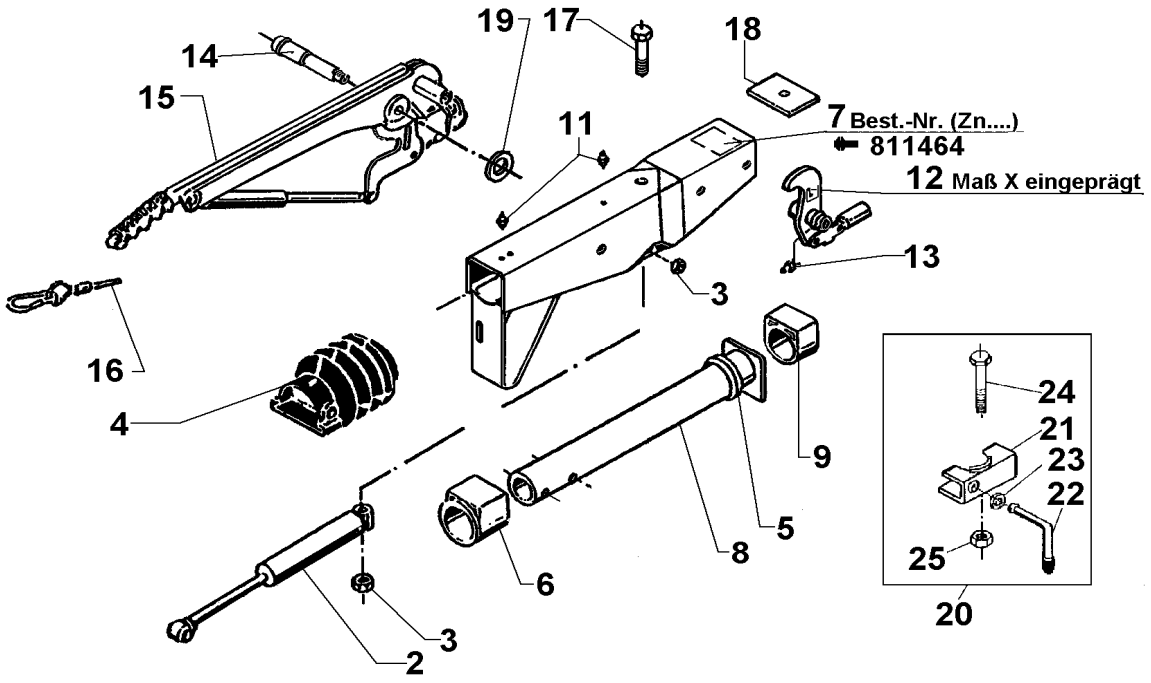

Item	Description	Drawing No.
2	SHOCK ABSORBER	583528
3	NUT HEX DIN980	704065
4	BELLOW	366356
5	DAMPING RUBBER	371372
6	FLANGE BUSH (not rubbed out)	353943
7	BODY CPL with pressed in bushes	*
8	DRAWBAR ROTATABLE	380413
9	PLAIN BUSH (not rubbed out)	353942
11	GREASE NIPPLE AS 8X1 CONUS	375900
12	BELL CRANK 105 : 31,5 WITH JOINT HEAD AND GREASE NIPPLE (POS.16)	648132
13	GREASE NIPPLE AS 6X1 CONUS	700203
14	BEARING BOLT	581145
15	HAND BRAKE LEVER incl. pos. 16	220094
16	BREAKAWAY CABLE	368605
17	BOLT HEX M12X120 DIN931	701670
18	END STOP PLATE	581699
19	WASHER 19,4X34X3	370693
20	MOUNTING CLAMP WELDED	
21	CLAMPING PART	20531802
22	LOCKING HANDLE CPL	20531703
23	WASHER A13 DIN125	700140
24	BOLT HEX M8X65 DIN931	701127
25	NUT HEX M8 DIN6925	700643

Item	Description	Drawing No.

*** For order look engraved drawing-number on the OD**

OD = Overrun device

provided	ETI-No.	changed	Change No.	Reason of the change	Revisons-No.
07.03.05	811464_en	30.07.2009	FREIGABE		A