OD 161 S (BELOW-ASSEMBLY, 700KG - 1350KG)

ETI- No. 811460 (Specify the order with the ETI No.)

Spare Parts

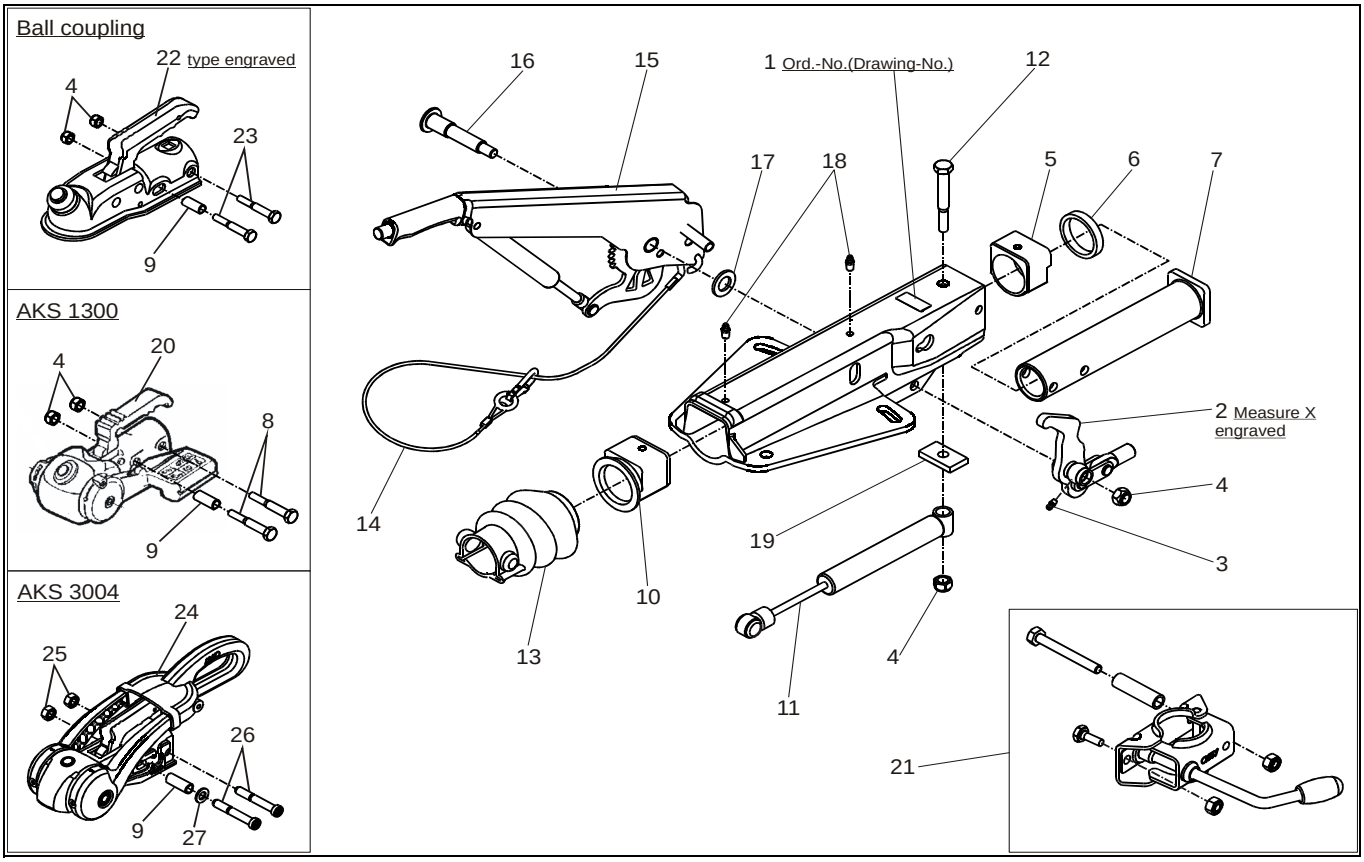

Item	Description	Drawing No.
1	BODY CPL. WITH PRESSED IN BUSHES FOR OD	*
2	BELL CRANK 90 : 27 WITH JOINT HEAD AND GREASE NIPPLE (POS.3)	380265
3	GREASE NIPPLE AS 6X1 CONUS	700203
4	NUT HEX M12 DIN 985	702750
5	PLAIN BUSH (not rubbed out)	353942
6	DAMPING RUBBER	371372
7	DRAWBAR WELDED	571873
8	BOLT HEX M12X75 DIN 931	701959
9	BUSH	370559
10	FLANGE BUSH (not rubbed out)	353943
11	SHOCK ABSORBER	583529
12	BOLT HEX M12X90 DIN 931	702823
13	BELLOW	366356
14	BREAKAWAY CABLE	368605
15	HAND BRAKE LEVER CPL. incl. pos. 14	220095
16	BEARING BOLT	581145
17	WASHER 19,4X34X3 DIN 125	370693
18	GREASE NIPPLE AS 8X1 CONUS	375900
19	END STOP PLATE	581699
20	BALL COUPLING AKS 1300 (without mounting material)	245795
21	CLAMP FOR TUBE 48 (upgrade could be mounted optionally)	293020

Item	Description	Drawing No.
22	BALL COUPLING (order due to type, without mounting material)	
23	BOLT HEX M12X70 DIN931	700061
24	BALL COUPLING AKS 3004 (without mounting material)	1220840
25	SAFETY NUT M12	371932
26	BOLT M12X78	692034
27	WASHER A13 DIN125	700140

*** look engraved drawing-number on the OD**

OD = overrun device

provided	ETI-No.	changed	Change No.	Reason of the change	Revisons-No.
04.07.05	811460_en	28.07.2009	15688	AKS 3004 and picture of ball coupling added	B