OD 161 S V-VERSION WITH DRAWBAR-EYE

ETI- No. 811452 (Specify the order with the ETI No.)

Spare Parts

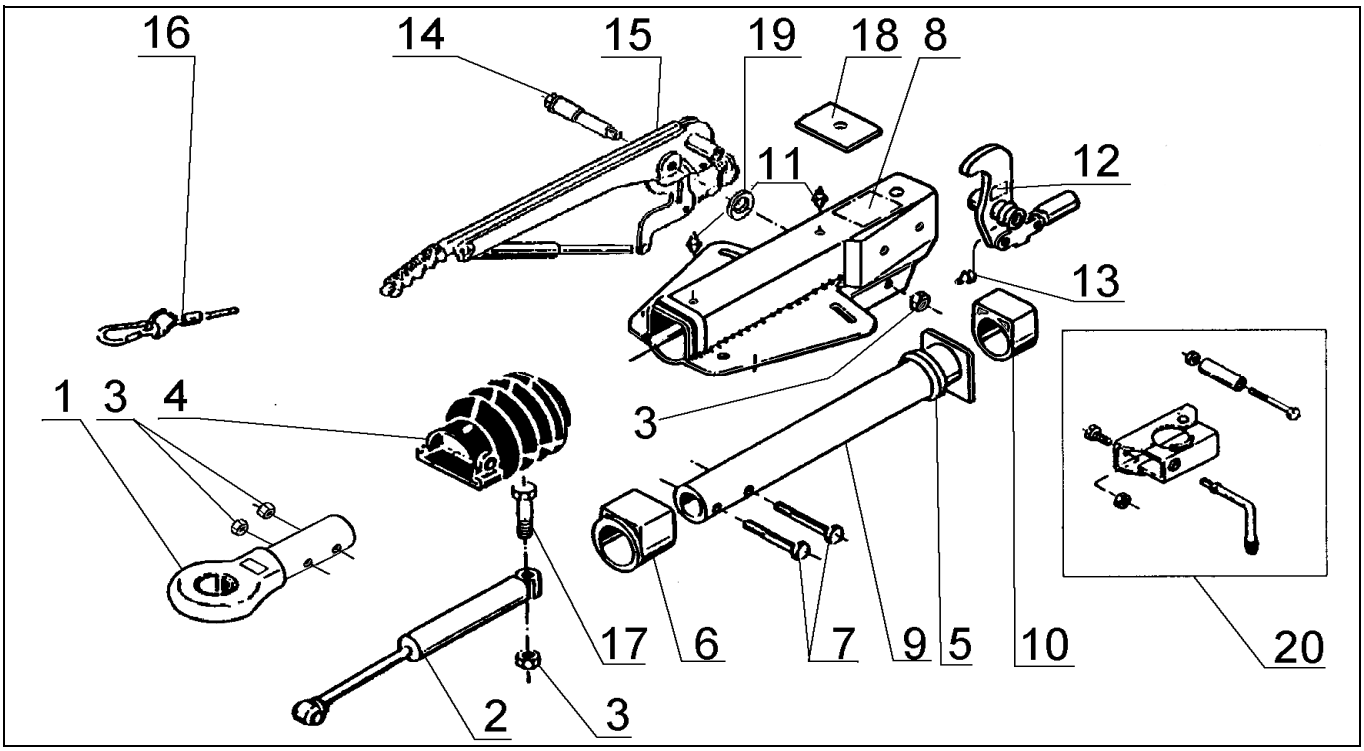

Item	Description	Drawing No.
1	DRAWBAR-EYE NATO (withou fastening mat.)	357420
2	SHOCK ABSORBER	583528
3	NUT HEX M12 DIN 980	704065
4	BELLOW	366356
5	DAMPING RUBBER	371372
6	FLANGE BUSH (not rubbed out)	353943
7	BOLT HEX M12X60 DIN 931	702749
8	BODY CPL. WITH BUSHES FOR OD	*
9	DRAWBAR WELDED	380309
10	PLAIN BUSH (not rubbed out)	353942
11	GREASE NIPPLE AS 8X1 CONUS	375900
12	BELL CRANK 90 : 27 WITH JOINT HEAD AND NIPPLE (POS.13) (measure X engraved)	380265
13	GREASE NIPPLE AS 6X1 CONUS	700203
14	BEARING BOLT	581145
15	HAND BRAKE LEVER CPL. incl. pos. 16	220094
16	BREAKAWAY CABLE	368605
17	BOLT HEX M12X90 DIN 931	702823
18	END STOP PLATE	581699
19	WASHER 19,4X34X3 DIN125	370693
20	CLAMP FOR TUBE 48 (upgrade could be mounted optionally)	293020

Item	Description	Drawing No.

*** look engraved drawing-number on the OD**

OD = overrun device

provided	ETI-No.	changed	Change No.	Reason of the change	Revisons-No.
24.03.04	811452_en	10.08.2009	FREIGABE		A