OVERRUN DEVICE 161 S SQUARE 70 ROTATABLE

ETI- No. 811450 (Specify the order with the ETI No.)

AL-KO Spare Parts

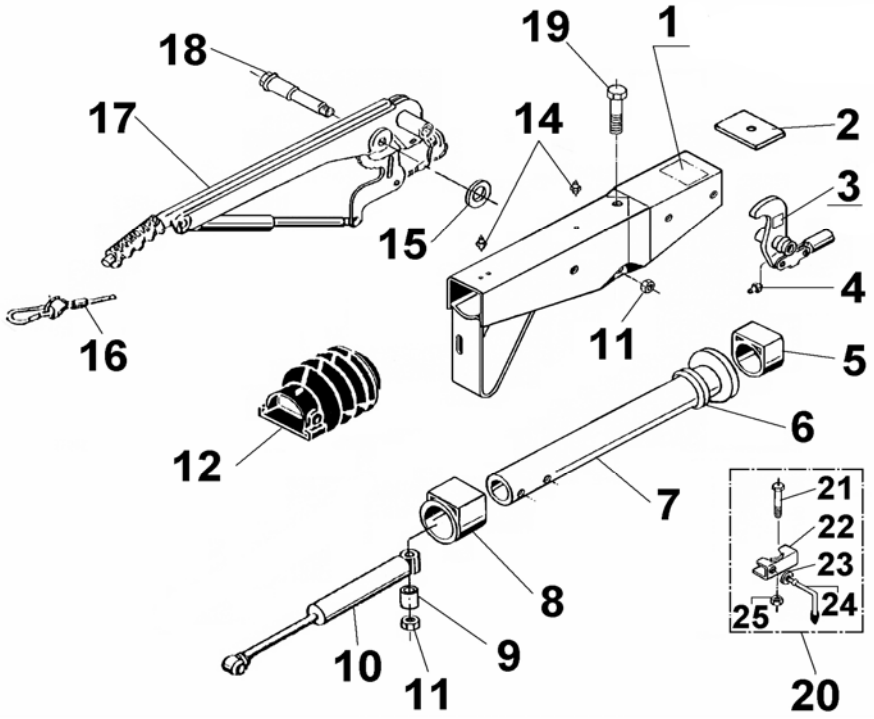

Item	Description	Drawing No.
1	BODY CPL with pressed in bushes	*
2	END STOP PLATE	581 699
3	BELL CRANK WITH JOINT HEAD AND NIPPLE (POS.4) (measure X engraved)	648 132
4	GREASE NIPPLE AS 6X1 CONUS	700 203
5	PLAIN BUSH (not rubbed out)	353 942
6	DAMPING RUBBER	371 372
7	DRAWBAR ROTATABLE	380 413
8	FLANGE BUSH (not rubbed out)	353 943
9	BUSH	625 660
10	SHOCK ABSORBER	370 558
11	NUT HEX M12 DIN980	704 065
12	BELLOW	366 356
14	GREASE NIPPLE AS 8X1 CONUS	375 900
15	WASHER 19,4X34X3	370 693
16	BREAKAWAY CABLE	368 605
17	HAND BRAKE LEVER incl. pos. 16	220 096
18	BEARING BOLT	581 145
19	BOLT HEX M12X120 DIN931	701 670
20	MOUNTING CLAMP WELDED	
21	BOLT HEX M8X65 DIN931	701 127
22	CLAMPING PART	205 318 02
23	WASHER A13 DIN125	700 140
24	LOCKING HANDLE CPL	205 317 03
25	NUT HEX M8 DIN6925	700 643

Item	Description	Drawing No.

*** For order look engraved drawing-number on the OD**

OD = Overrun device

provided	ETI-No.	changed	Change No.	Reason of the change	Revisons-No.
14.02.05	811450_en	10.08.2009	FREIGABE		A