OVERRUN DEVICE 161 S HYDR. / SQUARE 100

ETI- No. 811440 (Specify the order with the ETI No.)

AL-KO Spare Parts

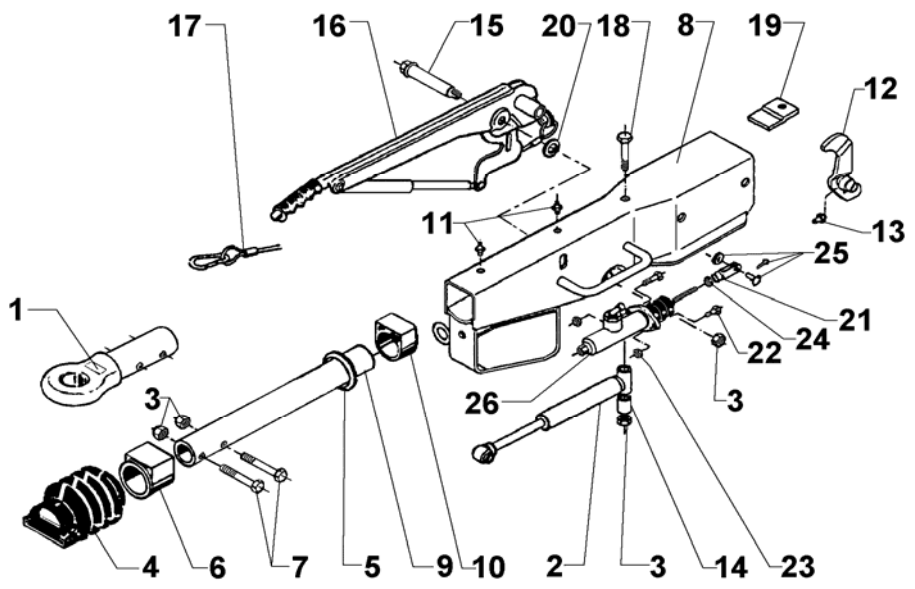

Item	Description	Drawing No.
1	DRAWBAR EYE (order according to type, without fastening material)	
2	SHOCK ABSORBER	370 558
3	NUT HEX M12 DIN980	704 065
4	BELLOW	366 356
5	DAMPING RUBBER	371 372
6	FLANGE BUSH (not rubbed out)	353 943
7	BOLT HEX M12X60 DIN931	702 749
8	BODY CPL WITH BUSHES FOR OD	*
9	DRAWBAR	571 875
10	PLAIN BUSH (not rubbed out)	353 942
11	GREASE NIPPLE AS 8X1 CONUS	375 900
12	UNI-BELL CRANK 90 : 30 WITH GREASE NIPPLE (POS.13)	690 105
13	GREASE NIPPLE AS 6X1 CONUS	700 203
14	BUSH	625 660
15	BEARING BOLT	581 145
16	HAND BRAKE LEVER CPL incl. pos. 17	1250058
17	BREAKAWAY CABLE	368 605
18	BOLT HEX M12X120 DIN931	701 670
19	END STOP PLATE	647 011
20	WASHER 19,4X34X3	370 693
21	FORK HEAD 10X40 DIN71752	700 739
22	BOLT HEX M8X30 DIN933	700 511
23	NUT HEX M8 DIN 985	700 121

Item	Description	Drawing No.
24	NUT HEX M10 DIN 934	700 109
25	BOLT 10X28X24 DIN1434	701 470
25	WASHER A 10,5 DIN125	700 139
25	SPLINT 3,2X20 DIN94	702 004
26	HYDRAULIC CYLINDER	1311411

*** For order look engraved drawing-number on the OD**

OD = Overrun device

provided	ETI-No.	changed	Change No.	Reason of the change	Revisons-No.
03.02.04	811440_en	05.08.2009	FREIGABE		A