OVERRUN DEVICE CPL 131R/A TURNABLE

ETI- No. 811430 (Specify the order with the ETI No.)

AL-KO Spare Parts

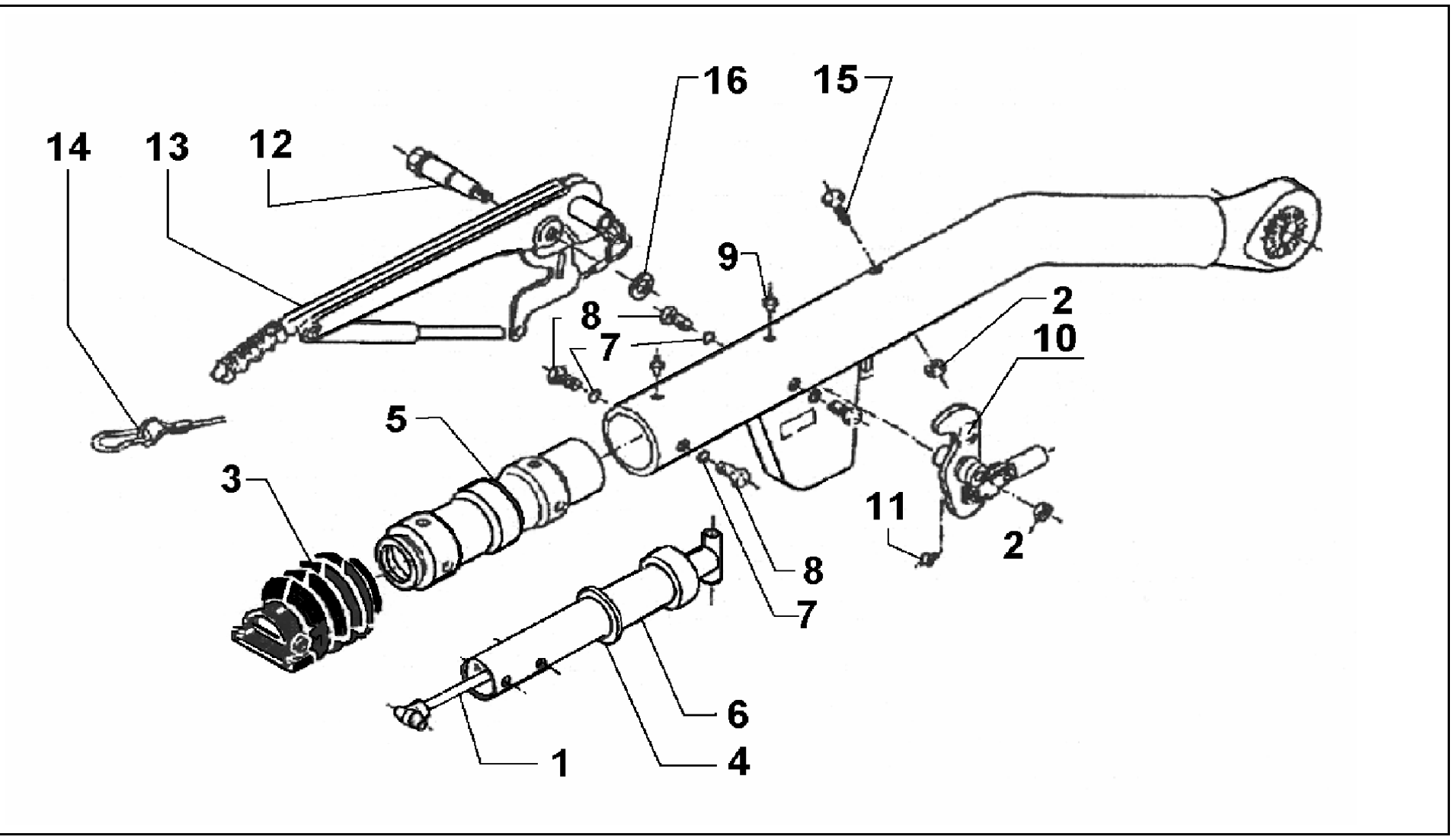

Item	Description	Drawing No.
1	SHOCK ABSORBER	583528
2	NUT HEX 12 980-V- 8A3C	704065
3	BELLOWS	366356
4	PROFILE RING	371372
5	BEARING CARTRIDGE WELDED	583046
6	DRAW TUBE WELDED	380507
7	FAN WASCHER A 10,5 6798 A3C	704095
8	BOLT 10X 16 933- 8.8A3C	703783
9	GREASE NIPPLE AS 8X1 KEG 71412	368461
10	BELL CRANK CPL	384655
11	GREASE NIPPLE AS 6X1 KEG 71412	700203
12	BEARING BOLT M12X1,5X106,5 VZ	581145
13	HAND BRAKE LEVER CPL WITH BRAKE AWAY CABLE	220096
14	BRAKE AWAY CABLE	368605
15	BOLT 12X110 931- 8.8A3C	700313
16	WASHER	370693

Item	Description	Drawing No.

DRAWBAR CUSTOMIZED - REPRESENT LENGHT AND TYPE BY PURCHASE ORDER

provided	ETI-No.	changed	Change No.	Reason of the change	Revisons-No.
26.11.03	811430_en	29.06.2009	FREIGABE		A