OVERRUN DEVICE 161S / SQUARE 100

ETI- No. 811411 (Specify the order with the ETI No.)

AL-KO Spare Parts

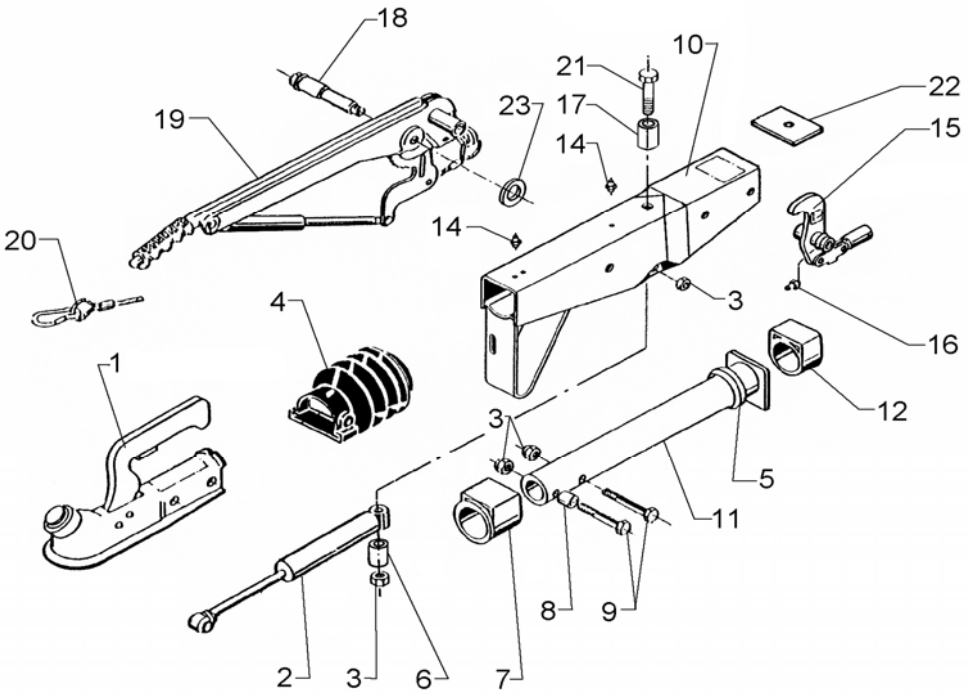

Item	Description	Drawing No.
1	BALL COUPLING (order due to engraved type, without mounting material)	
2	SHOCK ABSORBER	583 529
3	NUT HEX M12 DIN 985	704 065
4	BELLOW	366 356
5	DAMPING RUBBER	371 372
6	BUSH	647 572
7	FLANGE BUSH (not rubbed out)	353 943
8	BUSH	370 559
9	BOLT HEX M12X70 DIN931	700 061
10	BODY CPL WITH BUSHES FOR OD	*
11	DRAWBAR WELDED	571 873
12	PLAIN BUSH (not rubbed out)	353 942
14	GREASE NIPPLE AS 8X1 CONUS	375 900
15	BELL CRANK 90 : 27 WITH JOINT HEAD AND NIPPLE (POS.16) (Measure X engraved)	626 632
16	GREASE NIPPLE AS 6X1 CONUS	700 203
17	BUSH	625 660
18	BEARING BOLT	581 145
19	HAND BRAKE LEVER CPL. incl. pos. 20	220 094
20	BREAKAWAY CABLE	368 605
21	BOLT HEX M12X120 DIN 931	701 670
22	END STOP PLATE	581 699
23	WASHER	370 693

Item	Description	Drawing No.

*** for order look engraved drawing-number on the OD**

OD = overrun device

provided	ETI-No.	changed	Change No.	Reason of the change	Revisons-No.
15.07.03	811411_en	31.07.2009	FREIGABE		A