OVERRUN DEVICE 161S

ETI- No. 811405 (Specify the order with the ETI No.)

AL-KO Spare Parts

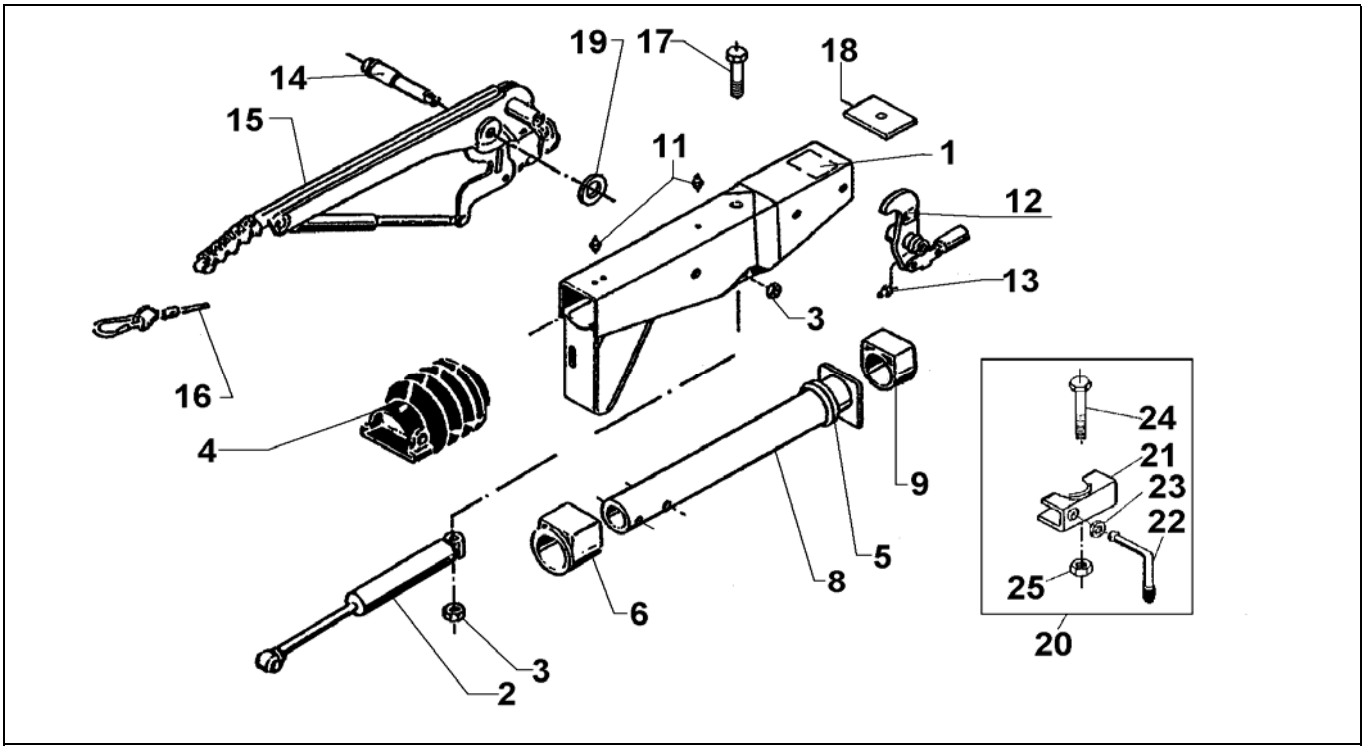

Item	Description	Drawing No.
1	BODY CPL WITH PRESSED IN BUSHES FOR OD	*
2	SHOCK ABSORBER	583 528
3	NUT HEX M12 DIN980	704 065
4	BELLOW	366 356
5	DAMPING RUBBER	371 372
6	FLANGE BUSH (not rubbed out)	353 943
8	DRAWBAR	571 874
9	PLAIN BUSH (not rubbed out)	353 942
11	GREASE NIPPLE AS 8X1 CONUS	375 900
12	BELL CRANK 90 : 27 WITH JOINT HEAD AND NIPPLE (POS.13) (Measure X engraved)	380 265
13	GREASE NIPPLE AS 6X1 CONUS	700 203
14	BEARING BOLT	581 145
15	HAND BRAKE LEVER incl. pos. 16	220 094
16	BREAKAWAY CABLE	368 605
17	BOLT HEX M12X120 DIN931	701 670
18	END STOP PLATE	581 699
19	WASHER 19,4X34X3	370 693
20	MOUNTING CLAMP WELDED	
21	CLAMPING PART	205 318 02
22	LOCKING HANDLE CPL	205 317 03
23	WASHER A13 DIN125	700 140
24	BOLT HEX M8X65 DIN931	701 127
25	NUT HEX M8 DIN6925	700 643

Item	Description	Drawing No.

*** For order look engraved drawing-number on the OD**

OD = Overrun device

provided	ETI-No.	changed	Change No.	Reason of the change	Revisons-No.
19.03.03	811405_en	31.07.2009	FREIGABE		A