OD 161S V WITH HBL-DEAD CENTRE AND DRAWBAR EYE

ETI- No. 811404 (Specify the order with the ETI No.)

AL-KO Spare Parts

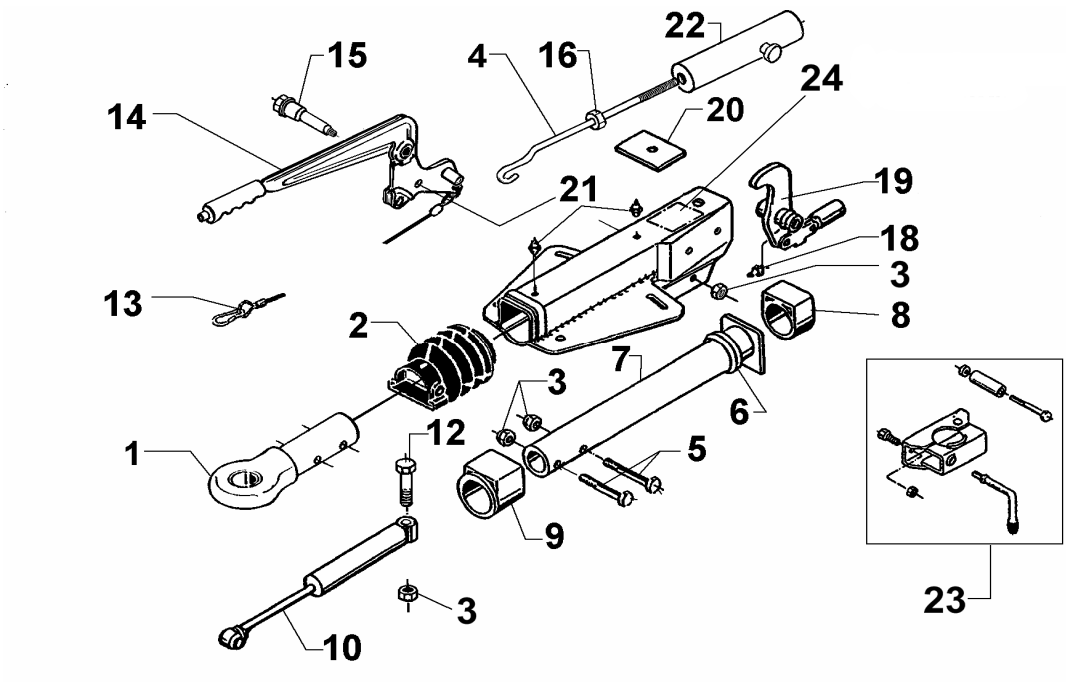

Item	Description	Drawing No.
1	DRAWBAR EYE DIN	357419
	DRAWBAR EYE NATO	357420
2	BELLOW	366356
3	NUT HEX M12 DIN980	704065
4	HOOK BAR	607013
5	BOLT HEX M12X60 DIN931	702749
6	DAMPING RUBBER	371372
7	DRAWBAR	571875
8	PLAIN BUSH (not rubbed out)	353942
9	FLANGE BUSH (not rubbed out)	353943
10	SHOCK ABSORBER	370558
12	BOLT HEX M12X90 DIN931	702823
13	BREAKAWAY CABLE	368605
14	HAND BRAKE LEVER incl. pos. 13	645420
15	BEARING BOLT	581145
16	NUT HEX M12 DIN985	702750
18	GREASE NIPPLE AS 6X1 CONUS	700203
19	BELL CRANK UNI 90 : 27	380525
20	END STOP PLATE	581699
21	GREASE NIPPLE AS 8X1 CONUS	375900
22	SPRING CYLINDER CPL	645388
23	CLAMP FOR TUBE 48 (upgrade could be mounted optionally)	293020
24	BODY CPL WITH BUSHES FOR OD	*

Item	Description	Drawing No.

*** For order look engraved drawing-number on the OD**

OD = OVERRUN DEVICE
HBL = HANDBRAKELEVER

provided	ETI-No.	changed	Change No.	Reason of the change	Revisons-No.
26.03.03	811404_en	31.07.2009	FREIGABE		A
	811404_en	02.12.2011 BB	16817	POS 1 DRAWBAR EYE NATO NEW	B