# OVERRUN DEVICE 161S VKT WITH DRAWBAR EYE

ETI- No. 811395 (Specify the order with the ETI No.)

AL-KO Spare Parts

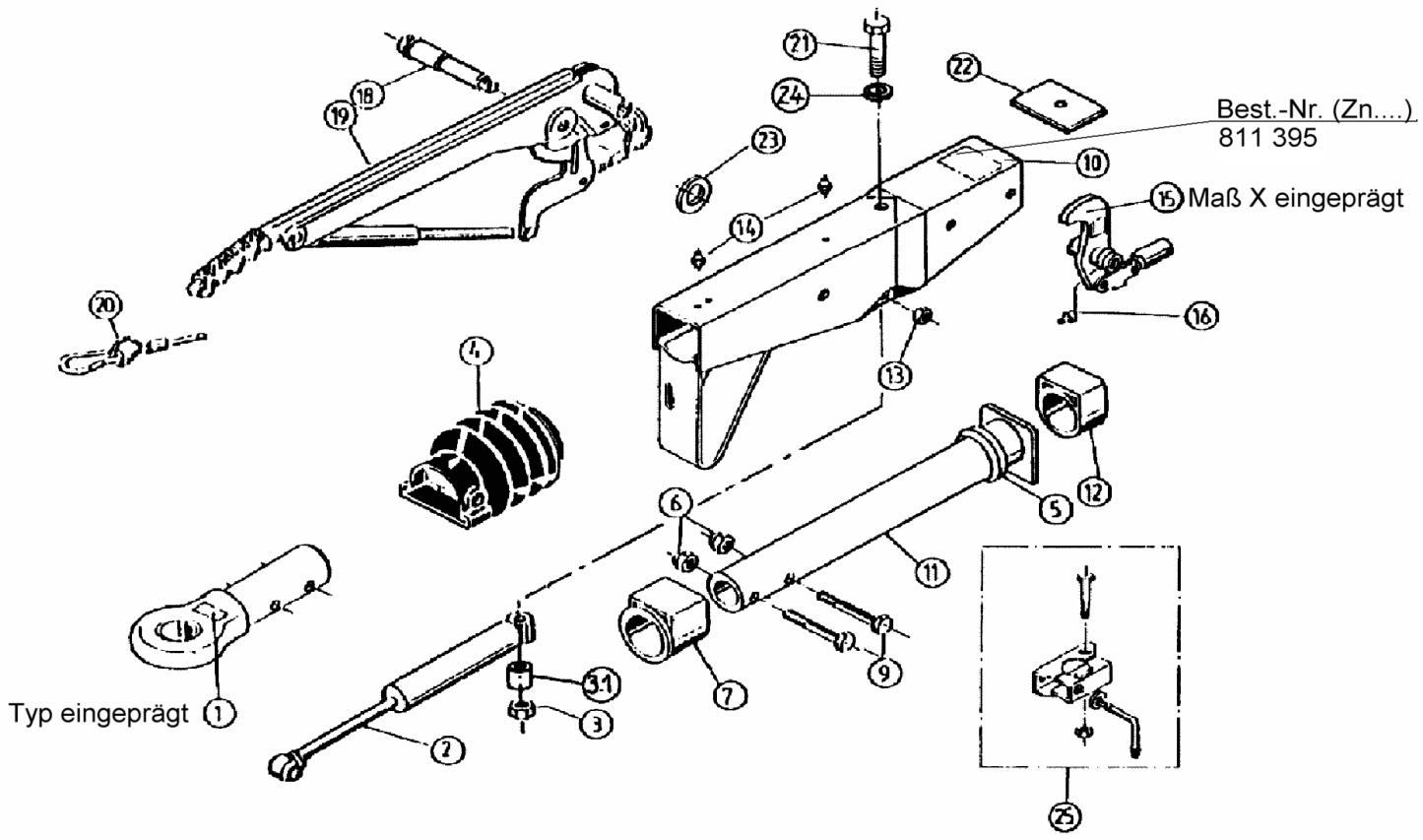


| Item | Description | Drawing No. |
|---|---|---|
| 1 | DRAWBAR EYE DIN (WITHOUT FIXING MATERIAL) | 357419 |
| 2 | SHOCK ABSORBER | 370558 |
| 3 | NUT HEX M12 DIN 985-10 A3C | 704065 |
| 3.1 | BUSH | 625660 |
| 4 | BELLOWS | 366356 |
| 5 | PROFILE RING | 371372 |
| 6 | NUT HEX M12 DIN 985-10 A3C | 704065 |
| 7 | BUSH (NOT RUB OUT) | 353943 |
| 8 | BUSH | 370559 |
| 9 | BOLT HEX M12x60 DIN 931 | 702749 |
| 10 | BODY CPL. WITH BUSHS OVERRUN DEVICE | * |
| 11 | DRAWTUBE | 571875 |
| 12 | BUSH (NOT RUB OUT) | 353942 |
| 13 | NUT HEX M12 DIN 985-10 A3C | 704065 |
| 14 | GREASE NIPPLE AM 8x1 CONUS | 375900 |
| 15 | BELL CRANK WITH FORK HEAD AND GREAASE NIPPLE (POS 16) MONT. | |
| | iH = 105:35 | 380319 |
| | iH = 105:31,5 | 648132 |
| 16 | GREASE NIPPLE AM 6 CONUS | 700203 |
| 18 | BEARING BOLT | 581145 |
| 19 | HAND BRAKE LEVER CYL. WITH HOOK | 220096 |
| 20 | BOLT HEX M12x120 DIN 931 | 368605 |
| 21 | BOLT HEX M12x120 DIN 931 | 701670 |

| Item | Description | Drawing No. |
|---|---|---|
| 22 | END STOP PLATE | 581699 |
| 23 | WASHER (19,4x34x3) | 370693 |
| 25 | IN CASE OF MONT. CLAMP (CLAMP WELDED) | |
| 25.1 | CLAMP | 20531802 |
| 25.2 | LOCKING HANDLE CPL. | 20531703 |
| 25.3 | WASHER A13 | 700140 |
| 25.4 | BOLT HEX M8x65 DIN 931 | 701127 |
| 25.5 | NUT HEX M8 DIN 6925-8 | 700643 |

* AT THE TIME OF ORDER SEE GRAVE DRAWING-NO. OVERRUN DEVICE

AT THE TIME OF ORDER ALWAYS INDICATE ETI-NO.

| provided | ETI-No. | changed | Change No. | Reason of the change | Revisons-No. |
|---|---|---|---|---|---|
| 18.09.02 | 811395_en | 18.10.2010 BB | FREIGABE | | A |