OVERRUN DEVICE 131 R VKT 100 WITH DIN-DRAWBAR EYE

ETI- No. 811340 (Specify the order with the ETI No.)

Spare Parts

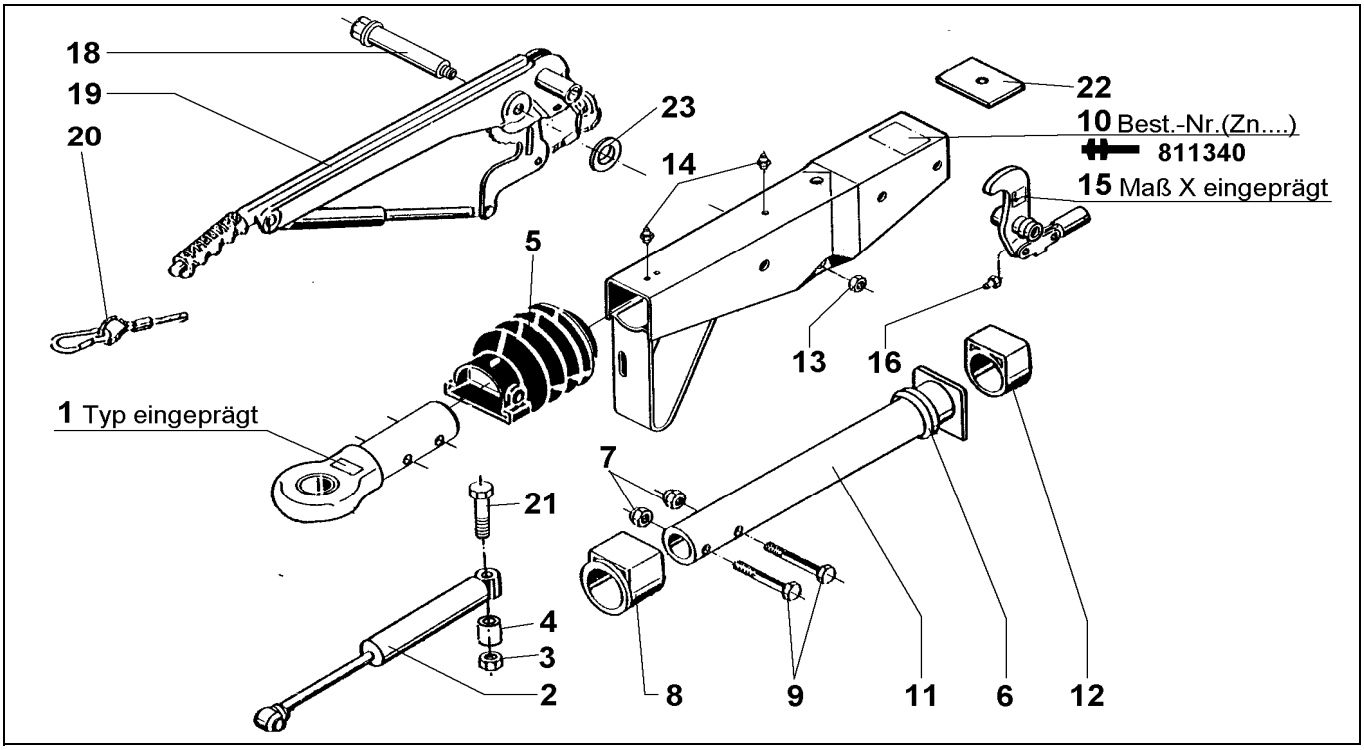

Item	Description	Drawing No.
1	DIN DRAWBAR EYE (PURCHASE ORDER BY TYPE; WITHOUT FIXING MATERIAL)	
2	SHOCK ABSORBER	583528
3	NUT HEX M12 DIN 985-10 A3C	702750
4	BUSH	625660
5	BELLOWS	366356
6	PROFILE RING	371372
7	NUT HEX M12 DIN 980-V8 A3C	704065
8	BUSH (NOT RUB OUT)	353943
9	BOLT HEX M12x60 DIN 931	702749
10	BODY CPL. WITH BUSHES OVERRUN DEVICE	*
11	DRAWTUBE WELDED	571875
12	PLAIN BEARING (NOT RUB OUT)	353942
13	NUT HEX M12 DIN 980-V8 A3C	704065
14	GREASE NIPPLE AM 8x1 CONUS	375900
15	BELL CRANK iH = 90,27	626632
16	GREASE NIPPLE CONUS	700203
18	BEARING BOLT	581145
19	HAND BRAKE LEVER CPL. WITH BRAKE AWAY CABLE	220094
20	BRAKE AWAY CABLE WITH HOOK	368605
21	BOLT HEX M12x120 DIN 931	701670
22	END STOP PLATE	581699
23	WASHER	370693

Item	Description	Drawing No.

* AT THE TIME OF ORDER SEE GRAVE DRAWING-NO. OVERRUN DEVICE

AT THE TIME OF ORDER ALWAYS INDICATE ETI-NO.

provided	ETI-No.	changed	Change No.	Reason of the change	Revisons-No.
22.05.01	811340_en	28.02.2011 BB	FREIGABE		A