OVERRUN DEVICE 131 R VKT 100

ETI- No. 811317 (Specify the order with the ETI No.)

AL-KO Spare Parts

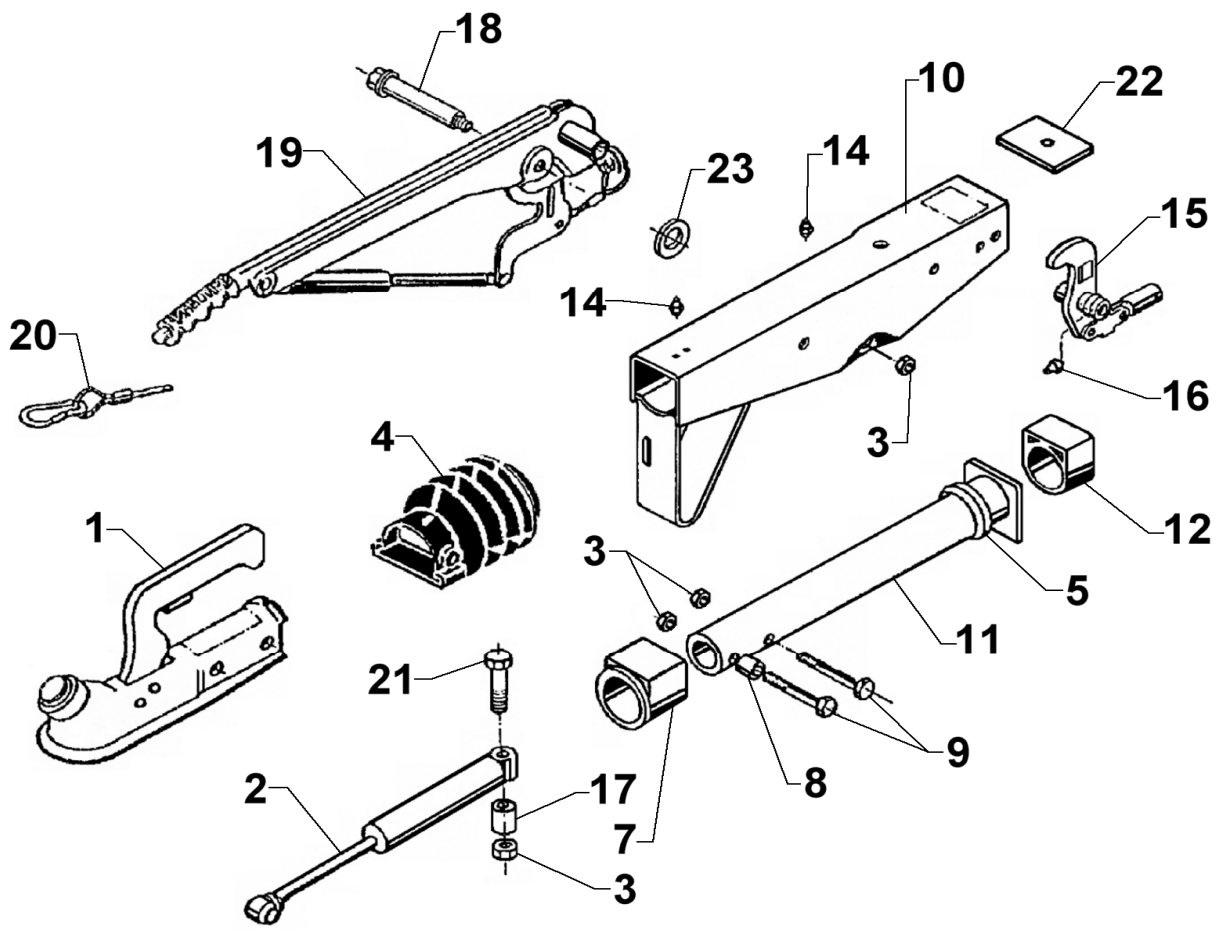

Item	Description	Drawing No.
1	COUPLING (PURCHASE ORDER BY TYPE, WITHOTU FIXING MATERIAL)	
2	SHOCK ABSORBER	583529
3	NUT HEX M12 DIN 980-8 A3C	704065
4	BELLOWS	366356
5	PROFILE RING	371372
7	BUSH (NOT RUB OUT)	353943
8	BUSH	370559
9	BOLT HEX M12x70 DIN 931	700061
10	BODY CPL. WIHT BUSHS OVERRUN DEVICE	AT THE TIME OF ORDER SEE GRAVE DRAWING-NO. OVERRUN DEVICE
11	DRAWTUBE WELDED	571873
12	BUSH (NOT RUB OUT)	353942
14	GREASE NIPPLE AM 8x1 CONUS	2171710001
15	BELL CRANK iH = 90:27	626632
16	GREASE NIPPLE AM 6 CONUS	700203
17	BUSH	625660
18	BEARING BOLT	581145
19	HAND BRAKE LEVER CPL. WITH BRAKE AWAY CYABLE	220094
20	BRAKE AWAY CABLE WITH HOOK	368605
21	BOLT HEX M2x120 DIN 931 8.8 A3C	701670
22	END STOP PLATE	581699
23	WASHER A17 DIN 125	700625

Item	Description	Drawing No.