OVERRUN DEVICE VERSION 161 R/D TUBE 88,9x5,6

ETI- No. 811316 (Specify the order with the ETI No.)

AL-KO Spare Parts

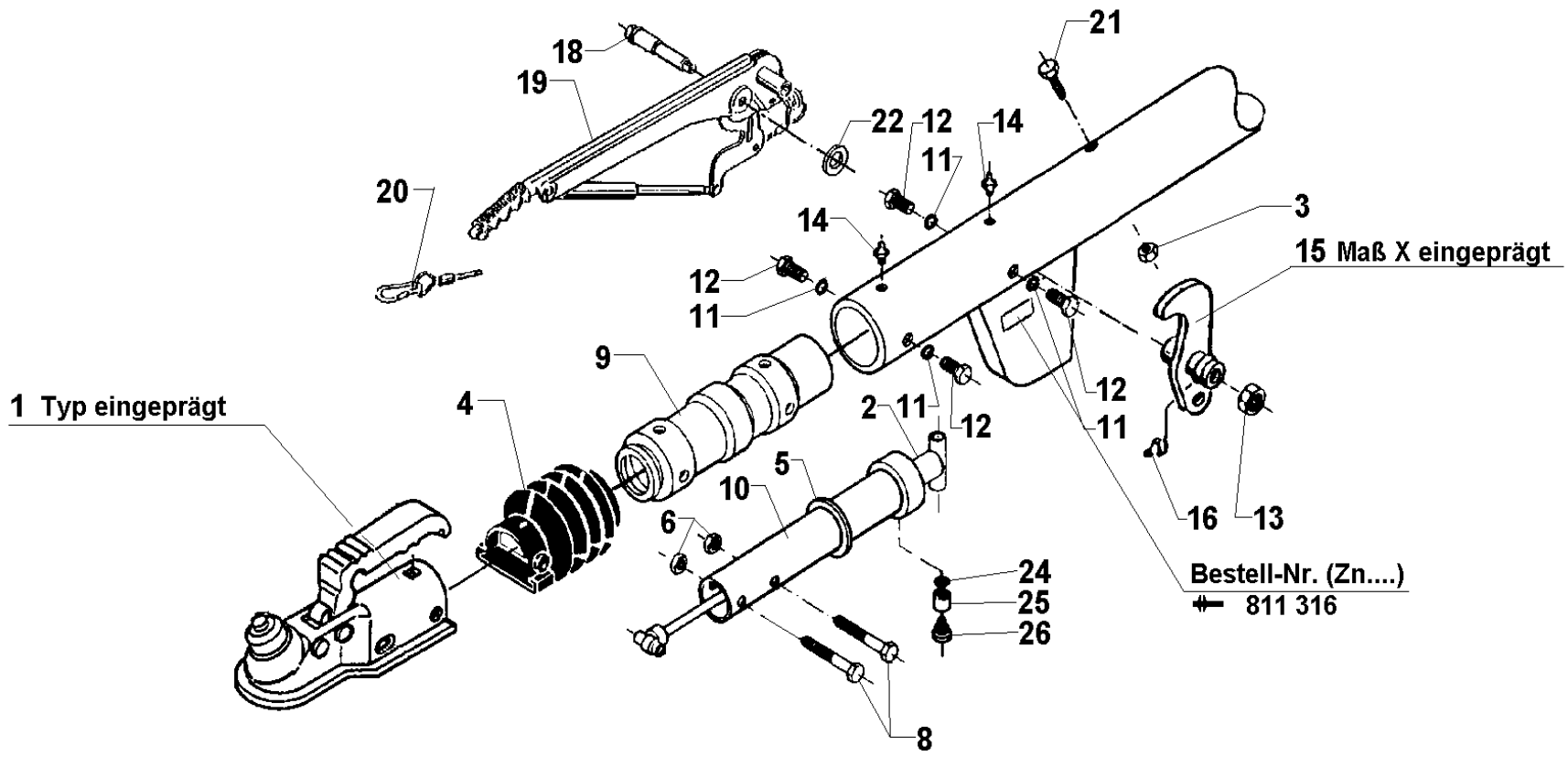

Item	Description	Drawing No.
1	COUPLING AK 160 (WITHOUT FIXING MATERIAL)	247163
2	SHOCK ABSORBER	583529
3	NUT HEX M12 DIN 980-V-8 A3C	704065
4	BELLOWS	366356
5	PROFILE RING	371372
6	NUT HEX M12 DIN 980-V-A3C	704065
8	BOLT HEX M12x70 DIN 931	700061
9	CAST- BEARING CARTRIDGE	583046
10	DRAWTUBE WELDED	380440
11	WASHER A10,5 DIN 6798 A3C	704095
12	BOLT HEX M10x16 DIN 933 A3C	703783
13	NUT HEX M 12 DIN 980-V-8 A3C	704065
14	GREASE NIPPLE AM 8x1 CONUS	368461
15	BELL CRANK CPL. WIHT JOINT HEAD AND GREASE NIPPLE MONT. iH = 90:27	384655
16	GREASE NIPPLE AS 6 CONUS	700203
18	BEARING BOLT	581145
19	HAND BRAKE LEVER CPL. WITH BRAKE AWAY CABLE	220094
20	BRAKE AWAY CABLE WITH HOOK	368605
21	BOLT HEX M12x10 DIN 931 A3C	700313
22	WASHER (19,2x34x3)	370693
24*	WASHER A8,4 DIN 6798 A3C	703466
25*	BUSH	583043
26*	BEARING BOLT	583042

Item	Description	Drawing No.

*NOT AT THE ROTATABLE TYPE

AT THE TIME OF ORDER ALWAYS INDICATE ETI-NO.

DRAWBAR WITH FOLLOW-UP BORE HOLES CLIENT SPECIFIC.
(AT THE TIME OF ORDER SEE GRAVE DRAWING-NO. OVERRUN DEVICE)

provided	ETI-No.	changed	Change No.	Reason of the change	Revisons-No.
13.11.01	811316_en	23.09.2010 BB	FREIGABE		A