# HUB 650KG (WHEEL LOAD) AXLE TYPE 1300 KG

ETI- No. 811302 (Specify the order with the ETI No.)

AL-KO Spare Parts

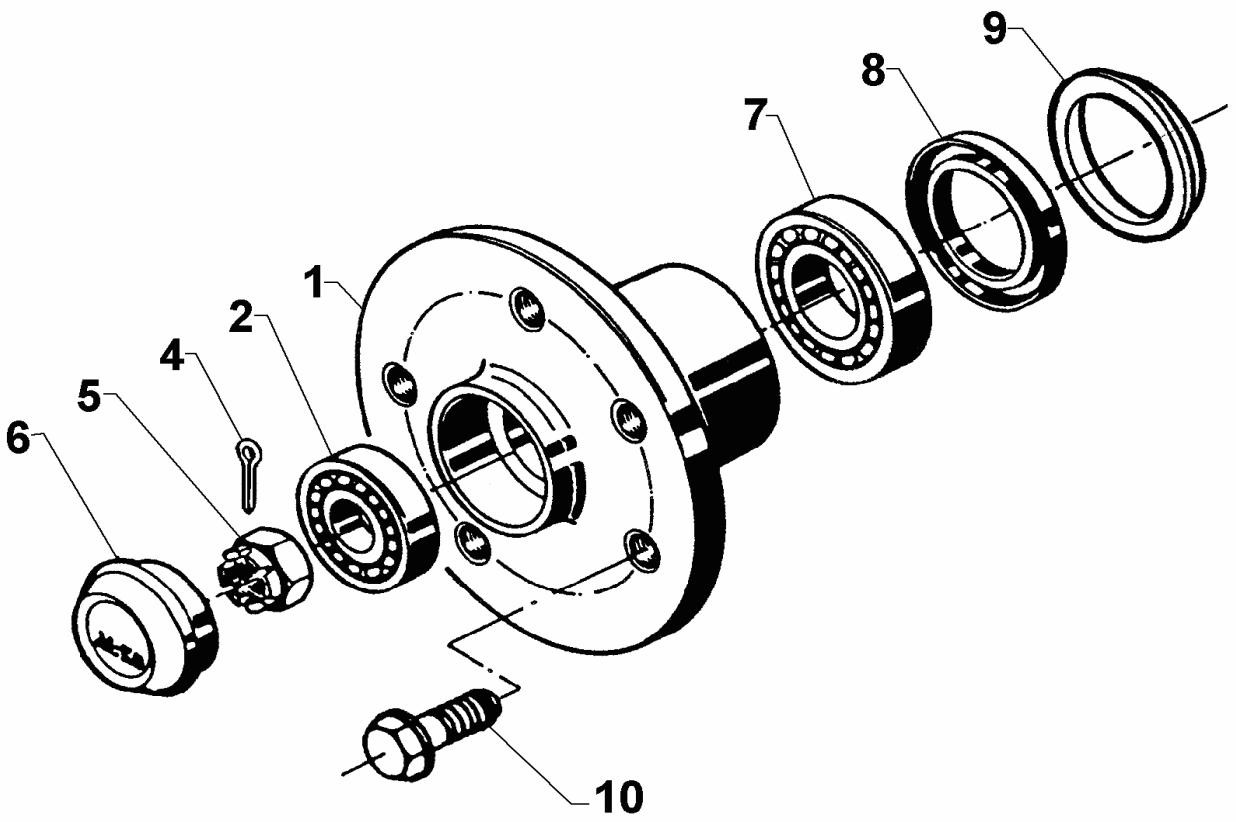


| Item | Description | Drawing No. |
|---|---|---|
| 1 | HAB DRILLED | |
| | 98x4/M12x1,5 | 357723 |
| | 100x4/M12x1,5 | 357724 |
| | 112x5/M12x1,5 | 357741 |
| | 114,3x5 | 1303691 |
| | 130x4/M14x1,5 | 1310922 |
| 2 | BEARING 67048/010 | 700771 |
| 4 | SPLINT 4x30 DIN 94 | 700194 |
| 5 | CASTELLATED NUT M18x1,5 DIN 937 | 700117 |
| 6 | END CAP | 2083990002 |
| 7 | BEARING KM 11949/910 | 700764 |
| 8 | SHAFT SEALING RING AS 42x62x NB | 700272 |
| 9 | COVER DISC | 2388750003 |
| 10 | WHEEL BOLT | |
| | M12x1,5 CONUS | 2081670018 |
| | M12x1,5 SPHERIC | 2081670020 |
| | M14x1,5 SPHERIC | 2081670002 |

| Item | Description | Drawing No. |
|---|---|---|
| | | |
| | _ | |

| provided | ETI-No. | changed | Change No. | Reason of the change | Revisons-No. |
|---|---|---|---|---|---|
| 18.04.00 | 811302_en | 18.02.2010 | FREIGABE | | A |