OVERRUN DEVICE 162 S

ETI- No. 811263 (Specify the order with the ETI No.)

AL-KO Spare Parts

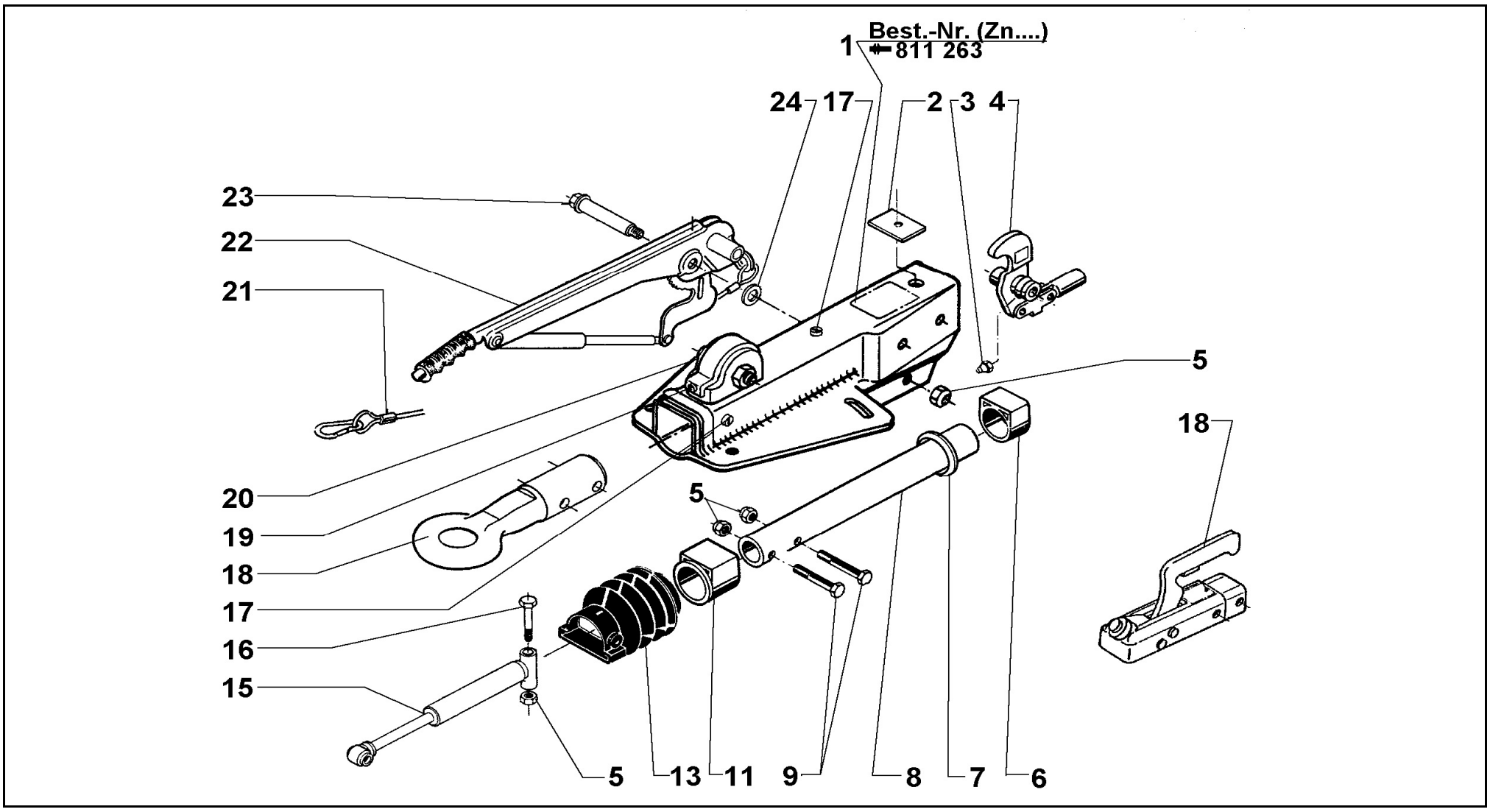

Item	Description	Drawing No.
1	BODY CPL WITH BUSHS OVERRUN DEVICE	AT THE TIME OF ORDER SEE GRAVE DRAWING-NO. OVERRUN DEVICE
2	END STOP PLATE	370557
3	GREASE NIPPLE AM 6 CONUS	700203
4	BELL CRANK WITH JOINT HEAD AND GREASE NIPPLE iH = 90:27	380265
5	NUT HEX M12 DIN 985 – 10 A3C	704065
6	BUSH (NOT RUB OUT)	353942
7	PROFILE RING	371372
8	DRAW TUBE WELDED	571875
9	BOLT HEX 12x60 DIN 931	702749
	BOLT HEX M12x85 (bei AK 301)	703551
11	BUSH (NOT RUB OUT)	353943
13	BELLOWS	366356
15	SHOCK ABSORBER	370558
16	BOLT HEX M12x90 DIN 931	700312
17	BOLT CYLINDER 5x8 DIN 84	700797
18	DRAWBAR EYE WITHOUT FIXING MATERIAL	357419
	COUPLING AK 350	247621
19	BOLT CYLINDER 3x6 DIN 84	702424
20	COVER PLATE	375841
21	BRAKE AWAY CABLE WITH HOOK	368605
22	HAND BRAKE LEVER CPL WITH BRAKE AWAY CABLE	220096
23	BEARING BOLT	581145

Item	Description	Drawing No.
24	WASHER (19,2x34x3)	370693

provided	ETI-No.	changed	Change No.	Reason of the change	Revisons-No.
21.04.99	811263_en	11.01.2010	FREIGABE		A