OVERRUN DEVICE 161 S VKT 70 WITH DRAWBAR EYE

ETI- No. 811261 (Specify the order with the ETI No.)

AL-KO Spare Parts

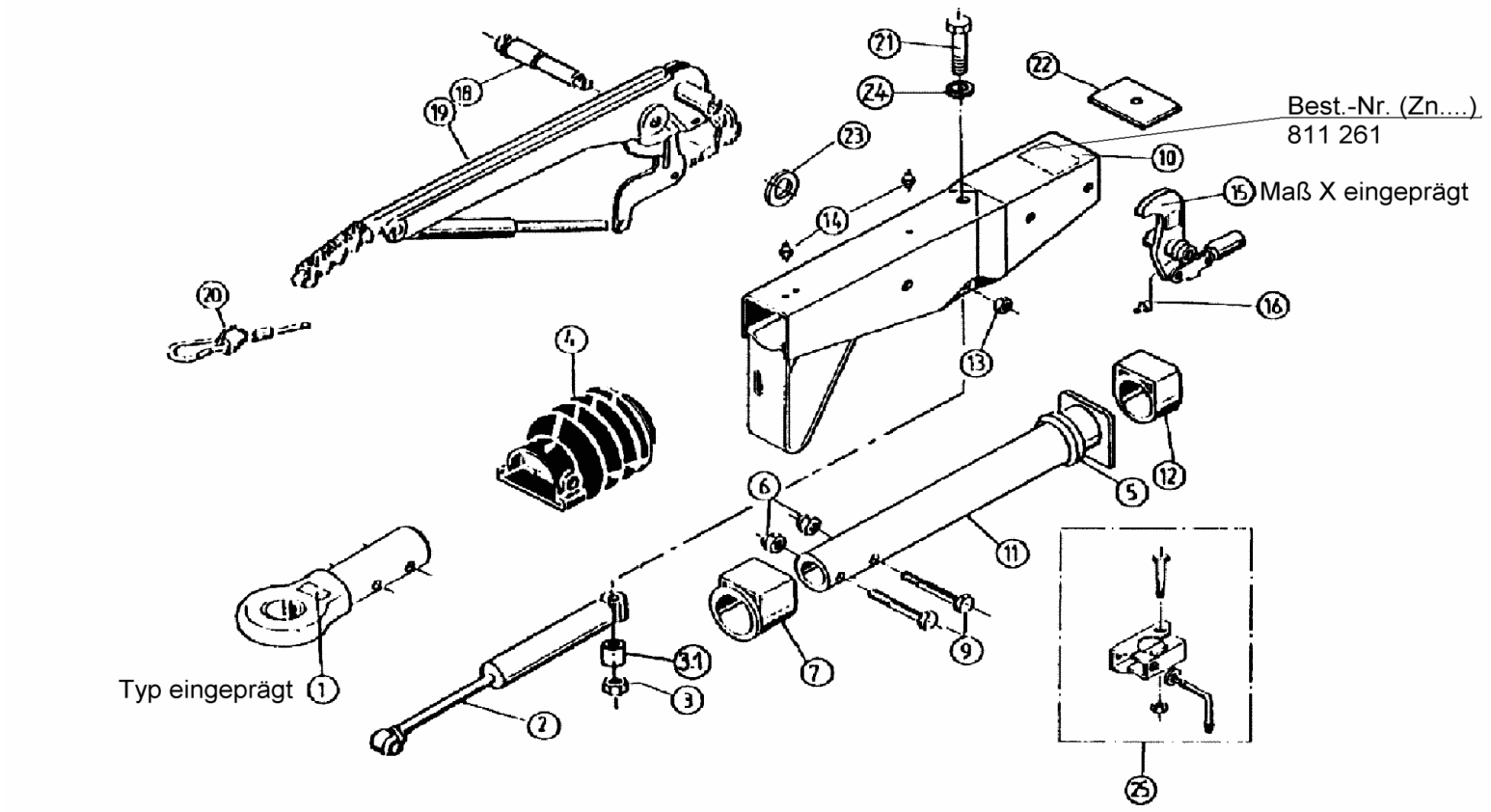

Item	Description	Drawing No.
1	DRAWBAR EYE WITHOUT FIXING MATERIAL	DIN 357419 NATO 357420 Italy 370999
2	SHOCK ABSORBER	370 558
3	NUT HEX M12 DIN 985-10 A3C	704065
3.1	BUSH	625660
4	BELLOWS	366356
5	PROFILE RING	371372
6	NUT HEX M12 DIN 985-10 A3C	704065
7	BUSH (NOT RUB OUT)	353943
9	BOLT HEX M12x60 DIN 931	702749
10	BODY CPL WITH BUSHS OVERRUN DEVICE	AT THE TIME OF ORDER SEE GRAVE DRAWING-NO. OVERRUN DEVICE
11	DRAW TUBE FOR DRAWBAR EYE DIN	571875
	DRAW TUBE FOR DRAWBAR EYE NATO/ ITALY	380309
12	BUSH (NOT RUB OUT)	353942
13	NUT HEX M12 DIN 985-10 A3C	704065
14	GREASE NIPPLE AM 8X1 CONUS	375900
15	BELL CRANK WITH JOINT HEAD AND GREASE NIPPLE (Pos.16) iH=90 : 30	380265
16	GREASE NIPPLE AM 6 CONUS	700203
18	BOLT HEX	581145

Item	Description	Drawing No.
19	HAND BRAKE LEVER CPL WITH BRAKE AWAY CABLE	220096
20	BRAKE AWAY CABLE WITH HOOK	368605
21	BOLT HEX M12x120 DIN 931	701670
22	END STOP PLATE	581699
23	WASHER (19,4x34x3)	370693
24	WASHER	700140
25	CLAMP (CLAMP WELDED)	
25.1	CLAMP PART	20531802
25.2	LOCKING HANDLE CPL	20531703
25.3	WASHER A13	700140
25.4	BOLT HEX M8x65 DIN 931	701127
25.5	NUT HEX M8 DIN 6925-8	700643

provided	ETI-No.	changed	Change No.	Reason of the change	Revisons-No.
15.04.99	811261_en	11.01.2010	FREIGABE		A