OVERRUN DEVICE 161 S / Vkt. 70

ETI- No. 811258 (Specify the order with the ETI No.)

AL-KO Spare Parts

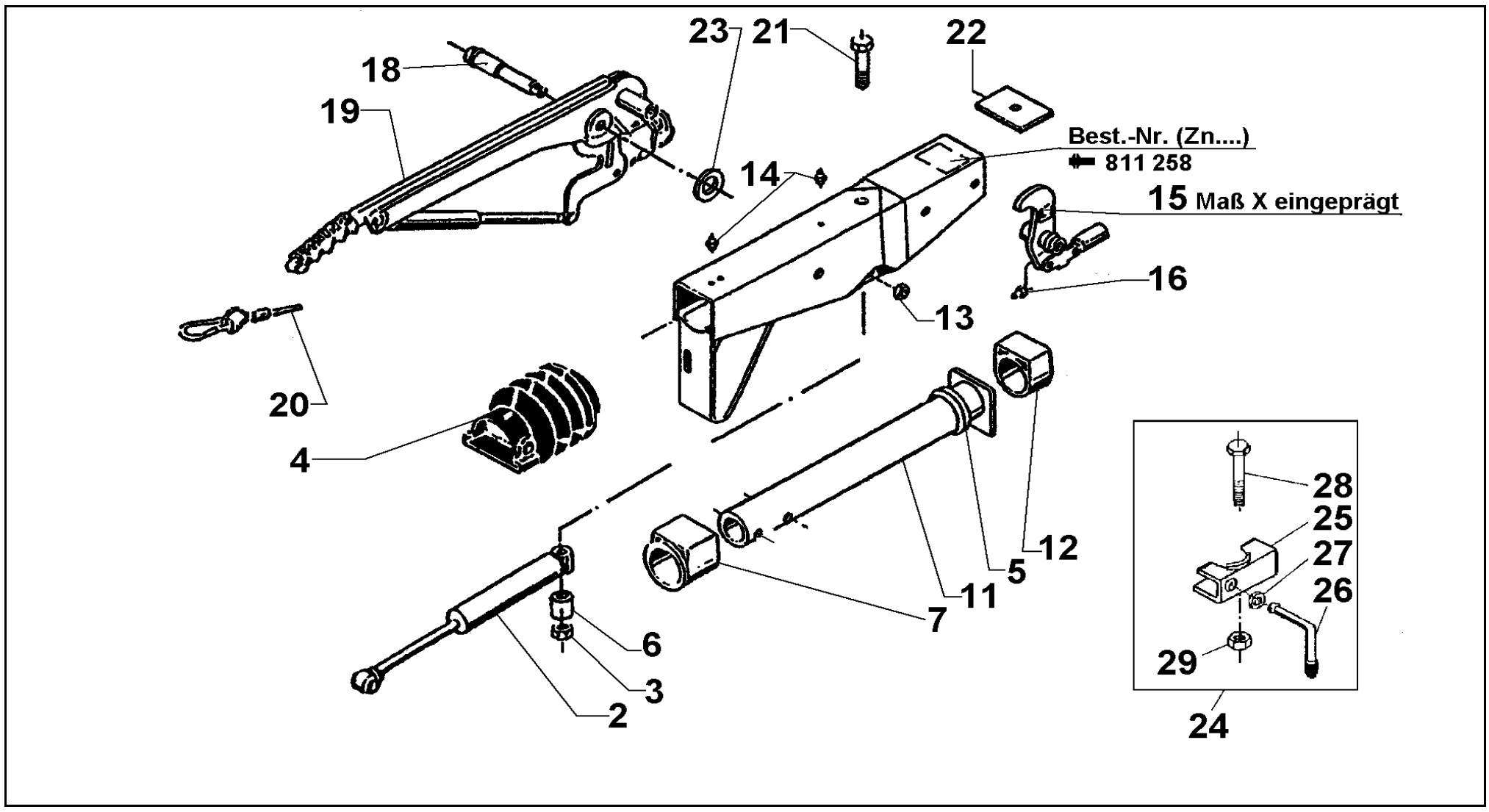

Item	Description	Drawing No.
2	SHOCK ABSORBER	370558
3	NUT HEX M12 DIN 980 A3C	704065
4	BELLOWS	366356
5	PROFILE RING	371372
6	BUSH (NOT RUB OUT)	625660
7	BUSH (NOT RUB OUT)	353943
10	BODY CPL WITH BUSHS OVERRUN DEVICE	AT THE TIME OF ORDER SEE GRAVE DRAWING-NO. OVERRUN DEVICE
11	DRAW TUBE WELDED	571874
12	BUSH (NOT RUB OUT)	353942
13	NUT HEX M12 DIN 985-10 A3C	701966
14	GREASE NIPPLE AM 8X1 CONUS	2171710001
15	BELL CRANK WITH JOINT HEAD AND GREASE NIPPLE iH = 90:27	380265
16	GREASE NIPPLE AM 6 CONUS	700203
18	BEARING BOLT	581145
19	HAND BRAKE LEVER CPL WITH BRAKE AWAY	220096
20	BRAKE AWAY CABLE WITH HOOK	368605
21	BOLT HEX M12x120 DIN 931	701670
22	END STOP PLATE	581699
23	WASHER (19,4x34x3)	370693
24	CLAMP (CLAMP WELDED)	
25	CLAMP PART	20531802

Item	Description	Drawing No.
26	LOCKING HANDLE CPL	20531703
27	WASHER A13	700140
28	BOLT HEX M8x65 DIN 931	701127
29	NUT HEX M8 DIN 6925-8	700643

provided	ETI-No.	changed	Change No.	Reason of the change	Revisons-No.
15.04.99	811258_en	11.01.2010	FREIGABE		A