OVERRUN DEVICE 161S V WITH DRAWBAR EYE

ETI- No. 811244 (Specify the order with the ETI No.)

Spare Parts

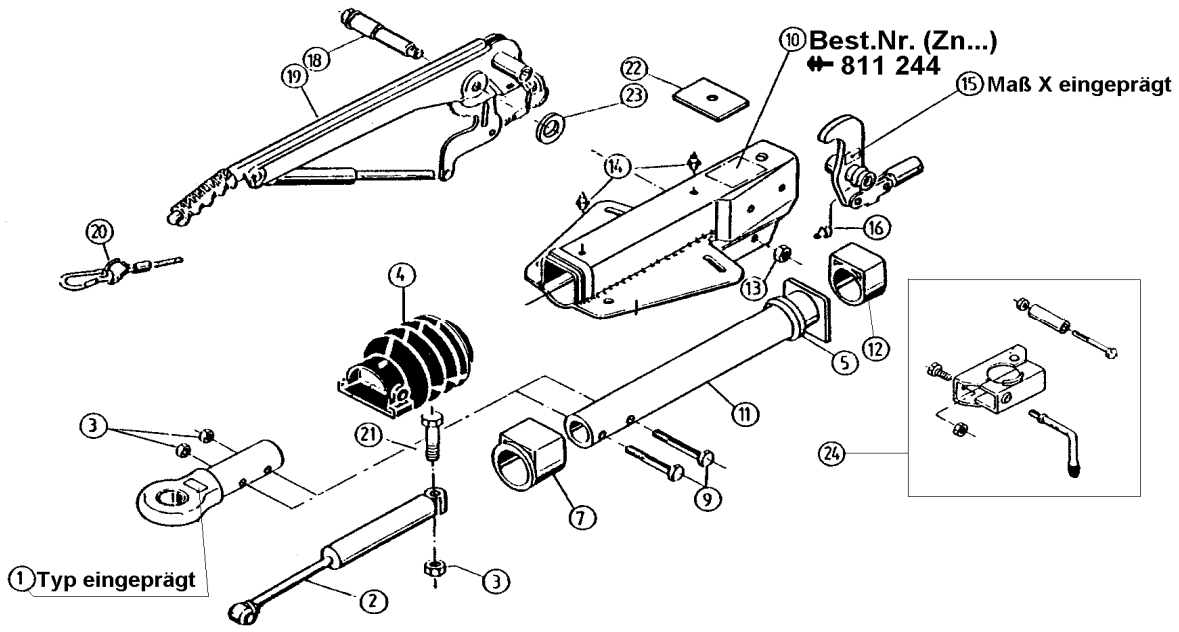

Item	Description	Drawing No.
1	DRAWBAR EYE (WITHOUT FIXING MATERIAL)	
	DIN	357419
	NATO	357420
	ITALY	370999
2	SHOCK ABSORBER	370 558
3	NUT HEX M12 DIN 980-V8 A3C	704 065
4	BELLOWS	366 356
5	PROFILE RING	371 372
6	NUT HEX M12 DIN 980-V8 A3C	704 065
7	BUSH (NOT RUB OUT)	353 943
9	BOLT HEX M12x60 DIN 931	702 749
10	BODY CPL. WITH BUSHS OVERRUN DEVICE	*
11	DRAW TUBE WELDED	380 309
12	BUSH (NOT RUB OUT)	353 942
13	NUT HEX M12 DIN 980-V8 A3C	704 065
14	GREASE NIPPLE AM 8x1 CONUS	375 900
15	BELL CRANK WITH JOINT HEAD AND GREASE NIPPLE (POS 16)	
	iH = 90:27	380265
	iH = 90:30	380285
16	GREASE NIPPLE AM 6 CONUS	700 203
18	BEARING BOLT	581 145
19	HAND BRAKE LEVER WITH BRAKE AWAY CABLE	220 097

Item	Description	Drawing No.
20	BRAKE AWAY CABLE WITH HOOK	368 605
21	BOLT HEX M12x90 DIN 961 8.8 A3C	700 312
22	END STOP PLATE	581 699
23	WASHER (19,4x34x3) DIN 125	370 693
24	CLAMP FOR TUBE 48 (RETROFIT KIT COULD ADD ON OPTIONALLY)	293 020

* AT THE TIME OF ORDER SEE GRAVE DRAWING-NO. OVERRUN DEVICE

AT THE TIME OF ORDER ALWAYS INDICATE ETI-NO.

provided	ETI-No.	changed	Change No.	Reason of the change	Revisons-No.
05.02.98	811244_en	01.10.2010 BB	FREIGABE		A