OVERRUN DEVICE TUBE 70x4/TYPE 131R VERSION A

ETI- No. 811242 (Specify the order with the ETI No.)

Spare Parts

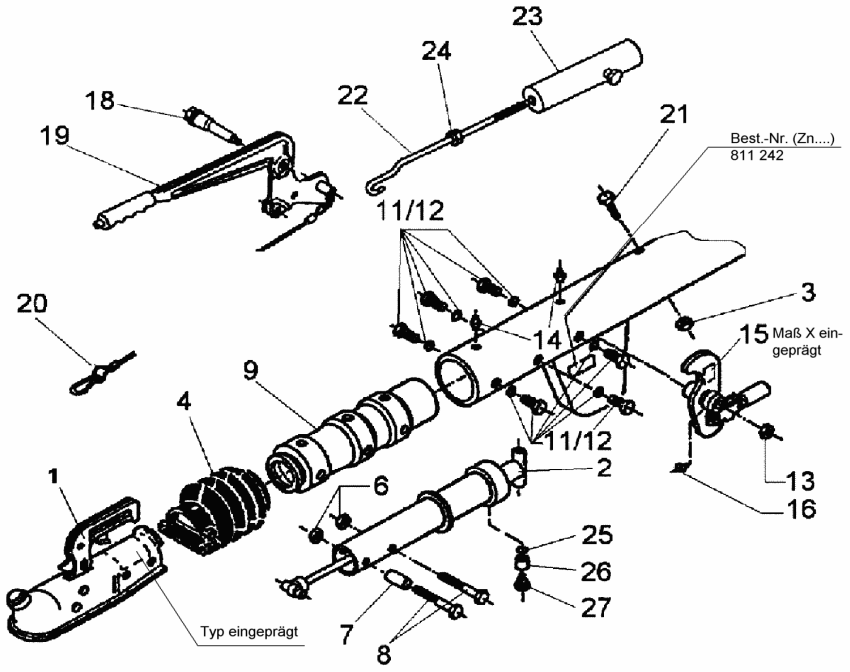

Item	Description	Drawing No.
1	COUPLING (PURCHASE ORDER BY TYPE; WITHOUT FIXING MATERIAL)	
2	SHOCK ABSORBER	583 529
3	NUT HEX M12 DIN 980-V8 A3C	704 065
4	BELLOWS	366 356
5	PROFILE RING	371 372
6	NUT HEX M12 DIN 980-V8 A3C	704 065
7	BUSH	370 559
8	BOLT HEX M12x70 DIN 931	700 061
9	CAST- BEARING CARTRIDGE	583 367
10	DRAW TUBE WELDED	380 365
11	WASCHER A8,4 DIN 6798 A3C	703 466
12	BOLT HEX M8x9 DIN 933 A3C	703 194
13	NUTHEX M12 DIN 980 V8 A3C	704 065
14	GREASE NIPPLE AM 8x1 CONUS	368 461
15	BELL CRANK CPL. (WITH JOINT HEAD AND GREASE NIPPLE MONT.) iH = 90:27	384 655
16	GREASE NIPPLE AM 6 CONUS	700 203
18	BEARING BOLT	647 473
19	HAND BRAKE LEVER CPL. WITH BRAKE AWAY CABLE	645 420
20	BRAKE AWAY CABLE WITH HOOK	368 605
21	BOLT HEX M12x90 DIN 931 ZINCED	702 823
22	HOOK ROD	607 013
23	SPRINGCYLINDER CPL.	645 388

Item	Description	Drawing No.
24	NUT HEX M12 DIN 980-V8 A3C	704 065
25	WASHER A8,4 DIN 6798 A3C	703 466
26	BUSH	583 463
27	BEARING BOLT	583 042

AT THE TIME OF ORDER ALWAYS INDICATE ETI-NO.

DRAWBAR WITH FOLLOW-UP BORE HOLES CLIENT SPECIFIC
(AT THE TIME OF ORDER SEE GRAVE DRAWING-NO. OVERRUN DEVICE)

provided	ETI-No.	changed	Change No.	Reason of the change	Revisons-No.
24.04.01	811242_en	01.10.2010 BB	FREIGABE		A