OD VKT100 161S GAS SP EYE

ETI- No. 811191 (Specify the order with the ETI No.)

AL-KO Spare Parts

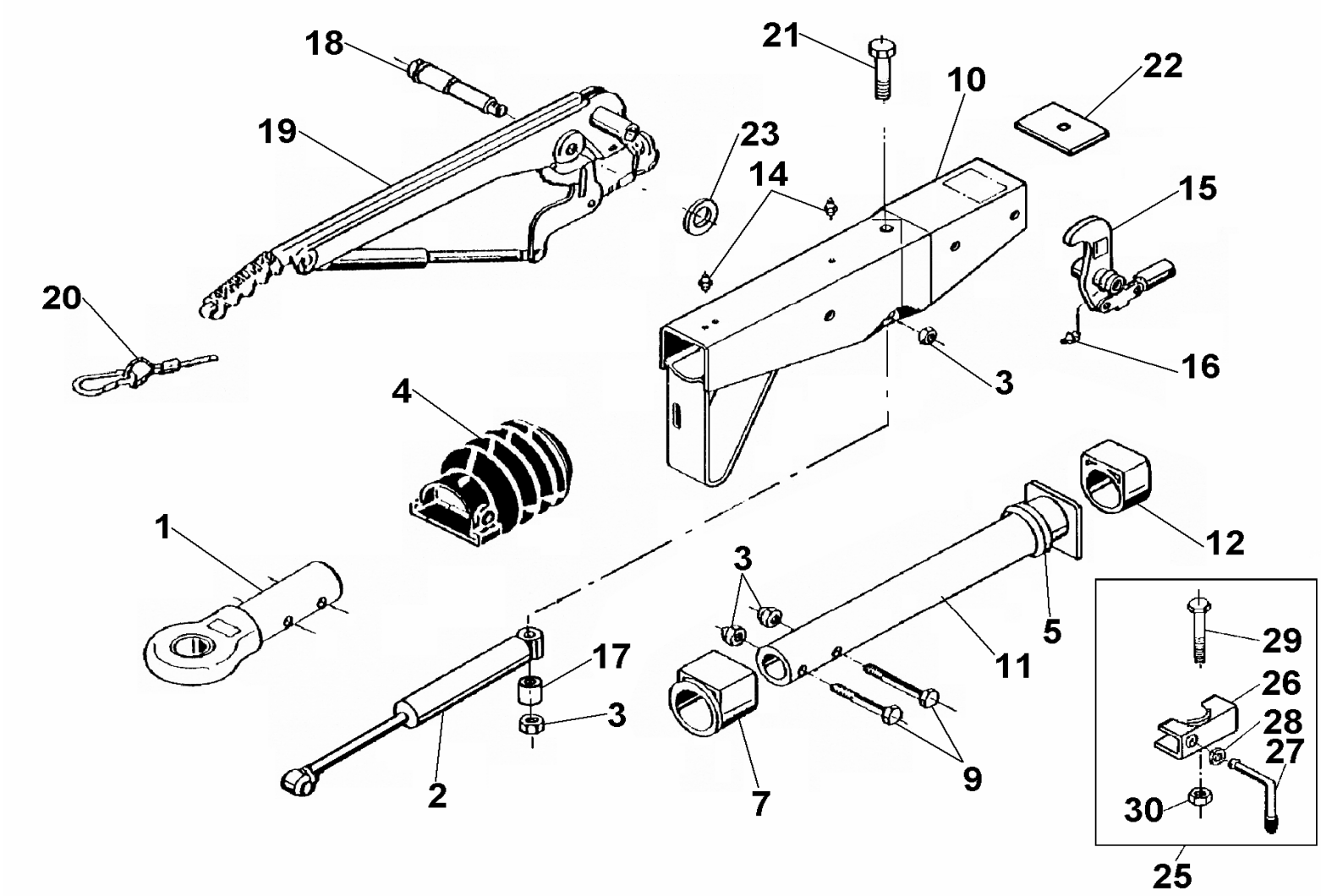

Item	Description	Drawing No.
1	DRAWBAR EYE (WITHOUT FIXING MATERIAL)	
	DIN	357419
	NATO	357420
	ITALY	370999
	ENGLAND	1302125
2	SHOCK ABSORBER	170558
3	NUT HEX M12 DIN 985-10 A3C	704065
4	BELLOWS	366356
5	PROFILE RING	371372
7	BUSH (NOT RUB OUT)	353943
9	BOLT HEX M12x60 DIN 931	702749
10	BODY CPL. WITH BUSHS OVERRUN DEVICE	AT THE TIME OF ORDER SEE GRAVE DRAWING-NO. OVERRUN DEVICE
11	DRAW TUBE FOR DRAWBAR EYE DIN	571875
	DRAW TUBE FOR DRAWBAR EYE NATO/ITALY	380309
12	BUSH (NOT RUB OUT)	353942
14	GREASE NIPPLE AM 8x1 CONUS	2171710001
15	BELL CRANK WITH JOINT HEAD AND GREASE NIPPLE (POS. 16) MONT.	
	iH = 90:30	626665
16	GREASE NIPPLE AM 6 CONUS	700203
17	BUSH	625660
18	BEARING BOLT	581145

Item	Description	Drawing No.
19	HAND BRAKE LEVER CPL. WITH BRAKE AWAY CABLE	220096
20	BRAKE AWAY CABLE	368605
21	BOLT HEX M12x120 DIN 931	701670
22	END STOP PLATE	581699
23	WASHER (19,4x34x3)	370693
25	IN CASE OF MONT CLAMP (CLAMP WELDED)	
26	CLAMPPART	20531802
27	LOCKING HANDLE CPL.	20531703
28	WASHER A13	700140
29	BOLT HEX M8x65 DIN 931	701127
30	NUT HEX M8 DIN 6925-8	700643

AT THE TIME OF ORDER ALWAYS INDICATE ETI-NO.

provided	ETI-No.	changed	Change No.	Reason of the change	Revisons-No.
31.07.97	811191_en	10.02.2010	FREIGABE		A