OD V 161S SP STO ST AKS ABOVE

ETI- No. 811123 (Specify the order with the ETI No.)

AL-KO Spare Parts

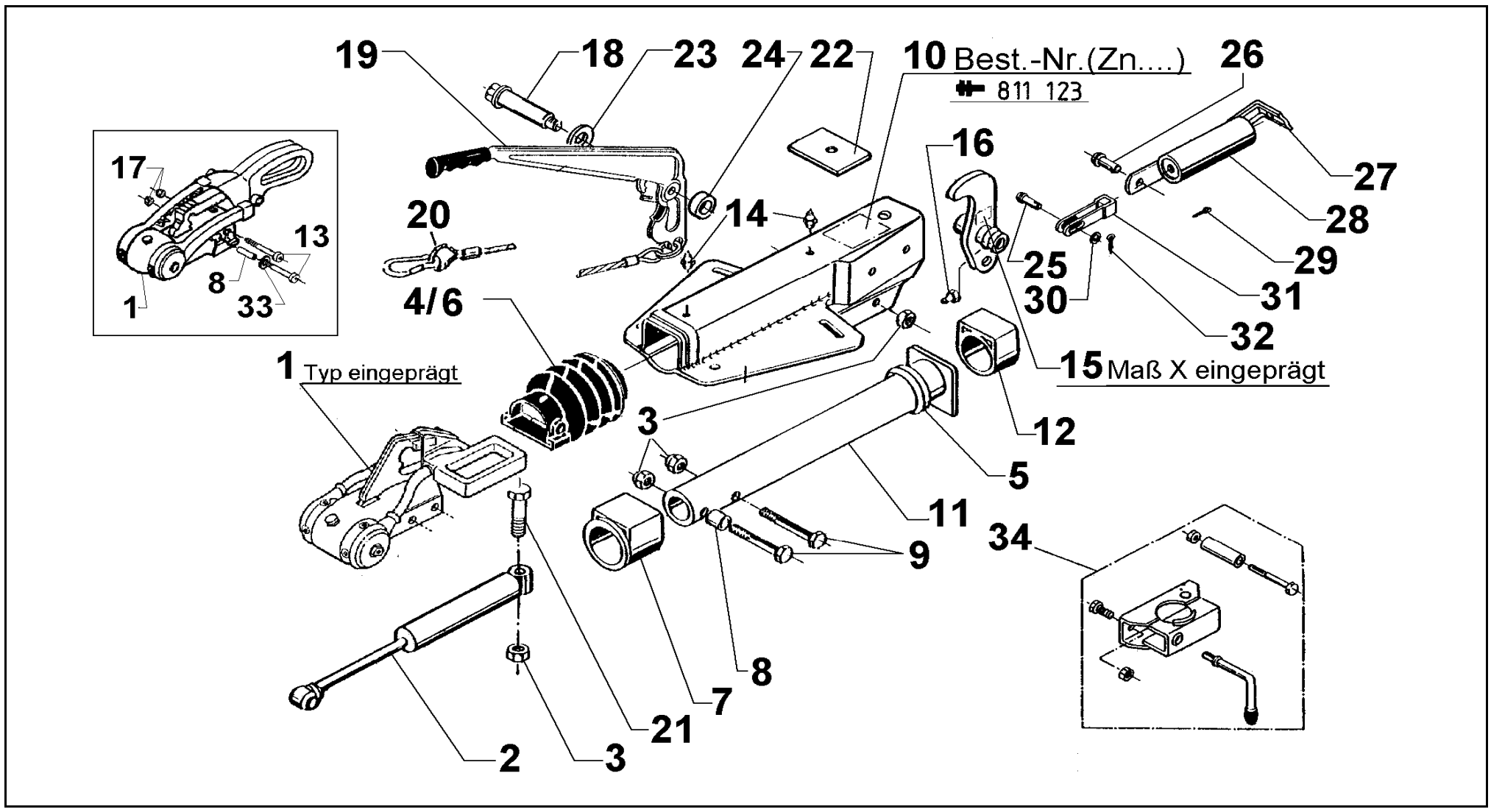

Item	Description	Drawing No.
1	COUPLING AKS 2000 / AKS2004 / AKS3004	
2	SHOCK ABSORBER	370556
3	NUT HEX M12 DIN 985-10 A3C	702750
4	BELLOWS FOR AKS 2000	366356
5	PROFILE RING	371372
6	BELLOWS FOR AKS 2004 / AKS 3004	607133
7	BUSH (NOT RUB OUT)	353943
8	BUSH	370559
9	BOLT HEX M12x70 DIN 931	700061
10	BODY CPL. WITH BUSHS OVERRUN DEVICE	SEE GRAVE DRAWING-NO OVERRUN DEVICE
11	DRAW TUBE WELDED	571873
21	BUSH (NOT RUB OUT)	353942
13	BOLT HEX M12x75 DIN 7984-10.9	692034
14	GREASE NIPPLE AM 8x1 CONUS	375900
15	BELL CRANK WITH JOINT HEAD AND GREASE NIPPLE MONT. iH = 90:27 iH = 90:30	 380310 380468
16	GREASE NIPPLE AM 6 CONUS	700203
17	SAFETY NUT BIW M12 3AC	371932
18	BEARING BOLT	2077710503
19	HAND BRAKE LEVER CPL. WITH BRAKE AWAY CABLE AND GEAR SEGMENT	204549
20	BRAKE AWAY CABLE WITH HOOK	368605

Item	Description	Drawing No.
21	BOLT HEX M12x90 DIN 931	700312
22	END STOP PLATE	581699
23	WASHER (17,2x304x3) DIN 125	700625
24	BUSH	358470
25	RIVET 10x25	647287
26	BOLT HEX M12x90 DIN 931	2076810609
27	TENSION BINDER	2170110608
28	SPRING CYLINDER	2075020601
29	SPLINT 4x20 DIN 94	700192
30	WASHER 10,5 DIN 125	700139
31	FORK HEAD	2073890606
32	SPLINT 3,2x20 DIN 94	700191
33	WASHER A13 DIN 125-ST A3C	700140
34	CLAMP FOR TUBE 48 (RETROFIT KIT COULD ADD ON OPTIONALLY)	293020

AT THE TIME OF ORDER ALWAYS INDICATE ETI-NO.

provided	ETI-No.	changed	Change No.	Reason of the change	Revisons-No.
33662	811123_en	13.09.2010 BB	16151	Pos 19 WAS 354259, Pos 25 WAS 642287,	B