OD TUBE70,0X4,0 131R/A GAS SP EYE

ETI- No. 811059 (Specify the order with the ETI No.)

AL-KO Spare Parts

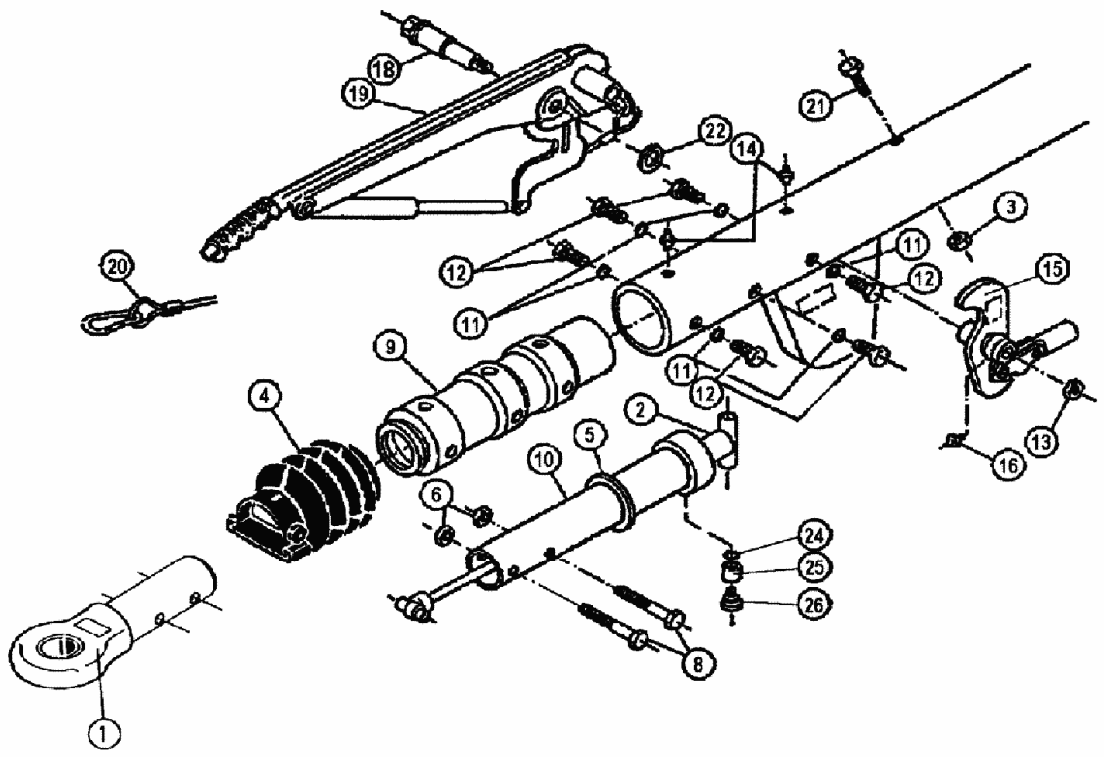

Item	Description	Drawing No.
1	DRAWBAR EYE (WITHOUT FIXING MATERIAL)	
	DIN	357419
	NATO	357420
	RING 68	241024
2	SHOCK ABSORBER	583528
3	NUT HEX M12 DIN 980 V 8A3C	704065
4	BELLOWS	366356
5	PROFILE RING	371372
6	NUT HEX M12 DIN 985-10 A3C	702750
7	BUSH	370559
8	BOLT HEX M12x60 DIN 931	700222
9	CAST- BEARING CARTRIDGE	583367
10	DRAW TUBE WELDED	380533
11	WASHER A8,4 DIN 6798 A3C	703466
12	BOLT HEX M8x9 DIN 933 8.8 A3C	703177
13	NUT HEX AM12 DIN 980-V 8A3C	704065
14	GREASE NIPPLE AM8x1 CONUS	368461
15	BELL CRANK WITH JOINT HEAD AND GREASE NIPPLE MONT.	384655

Item	Description	Drawing No.
16	GREASE NIPPLE AM6 CONUS	700203
18	BEARING BOLT	581145
19	HAND BRAKE LEVER CPL WITH BRAKE AWAY CABLE	220094
20	BRAKE AWAY CABLE WITH HOOK	368605
21	BOLT HEX M12x90 DIN 931 V 8A3C	702823
22	WASHER (19,2x34x2)	370693
24*	WASHER A 8,4 DIN 6798 ZINC-PLATED	703466
25*	BUSH	583463
26*	BEARING BOLT	583042

* NOT AT THE ROTATABLE TYPE

AT THE TIME OF ORDER ALWAYS INDICATE ETI-NO.

AT THE TIME OF ORDER SEE GRAVE DRAWING-NO. OVERRUN DEVICE)

provided	ETI-No.	changed	Change No.	Reason of the change	Revisons-No.
03.09.93	811059_en	20.01.2010	FREIGABE		A