OD VKT 161S GAS SP EYE TILL 09/96

ETI- No. 811055 (Specify the order with the ETI No.)

AL-KO Spare Parts

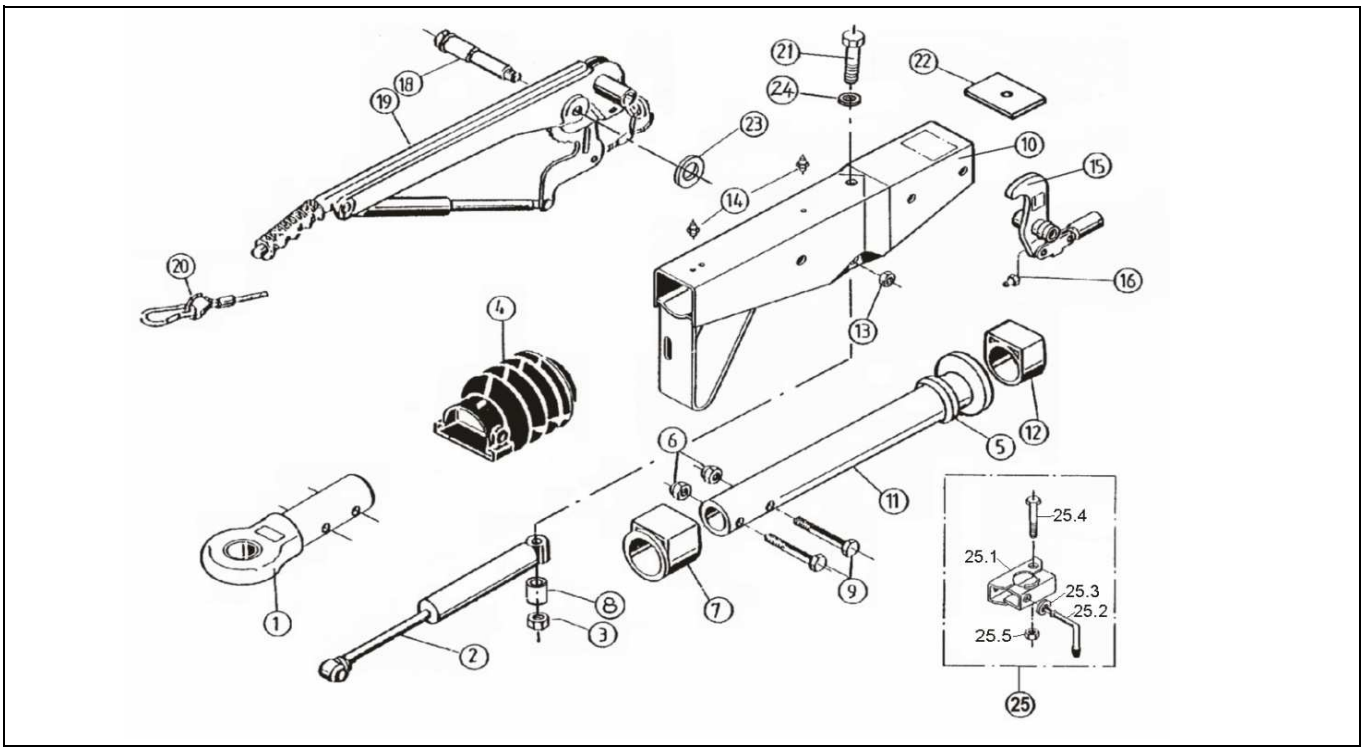

Item	Description	Drawing No.
1	DRAWBAR EYE (WITHOUT FIXING MATERIAL)	
	DIN	357419
	NATO	357420
	ITALY	370999
2	SHOCK ABSORBER	370558
3	NUT HEX M12 DIN 985-10 A3C	371932
4	BELLOWS	366356
5	PROFILE RING	371372
6	NUT HEX M12 DIN 985-10 A3C	702750
7	BUSH (NOT RUB OUT)	353943
8	BUSH	370580
9	BOLT HEX M12x60 DIN 931	700222
10	BODY CPL WITH BUSHS OVERRUN DEVICE	AT THE TIME OF ORDER SEE GRAVE DRAWING-NO. OVERRUND DEVICE
11	DRAW TUBE WELDED	380413
12	BUSH (NOT RUB OUT)	353942
13	NUT HEX M12 DIN 985-10 A3C	702750
14	GREASE NIPPLE AM 9x1 CONUS	375900
15	BELL CRANK WITH JOINT HEAD AND GREASE NIPPLE MONT.	
	iH = 90:27	380265
16	GREASE NIPPLE AM 6 CONUS	700203

Item	Description	Drawing No.
18	BEARING BOLT	581145
19	HAND BRAKE LEVER CPL. WITH BRAKE AWAY CABLE	220096
20	BRAKE AWAY CABLE WITH HOOK	368605
21	BOLT HEX M12x105 DIN 931	703134
22	END STOP PLATE	581699
23	WASHER (19,2x34x3)	370693
24	WASHER	700140
25	IN CASE OF MONT. CLAMP (CLAMP WELDED)	
25.1	CLAMP PART	20531802
25.2	LOCKING HANDLE CPL.	20531703
25.3	WASHER A13	700140
25.4	BOLT HEX M12x65 DIN 931	701127
25.5	NUT HEX M8 DIN 6925-8	700643

AT THE TIME OF ORDER ALWAYS INDICATE ETI-NO.

provided	ETI-No.	changed	Change No.	Reason of the change	Revisons-No.
19.03.93	811055_en	19.01.2010	FREIGABE		A