OD TUBE70,0X4,0 131R/A D F GAS SP COUPL

ETI- No. 811043 (Specify the order with the ETI No.)

AL-KO Spare Parts

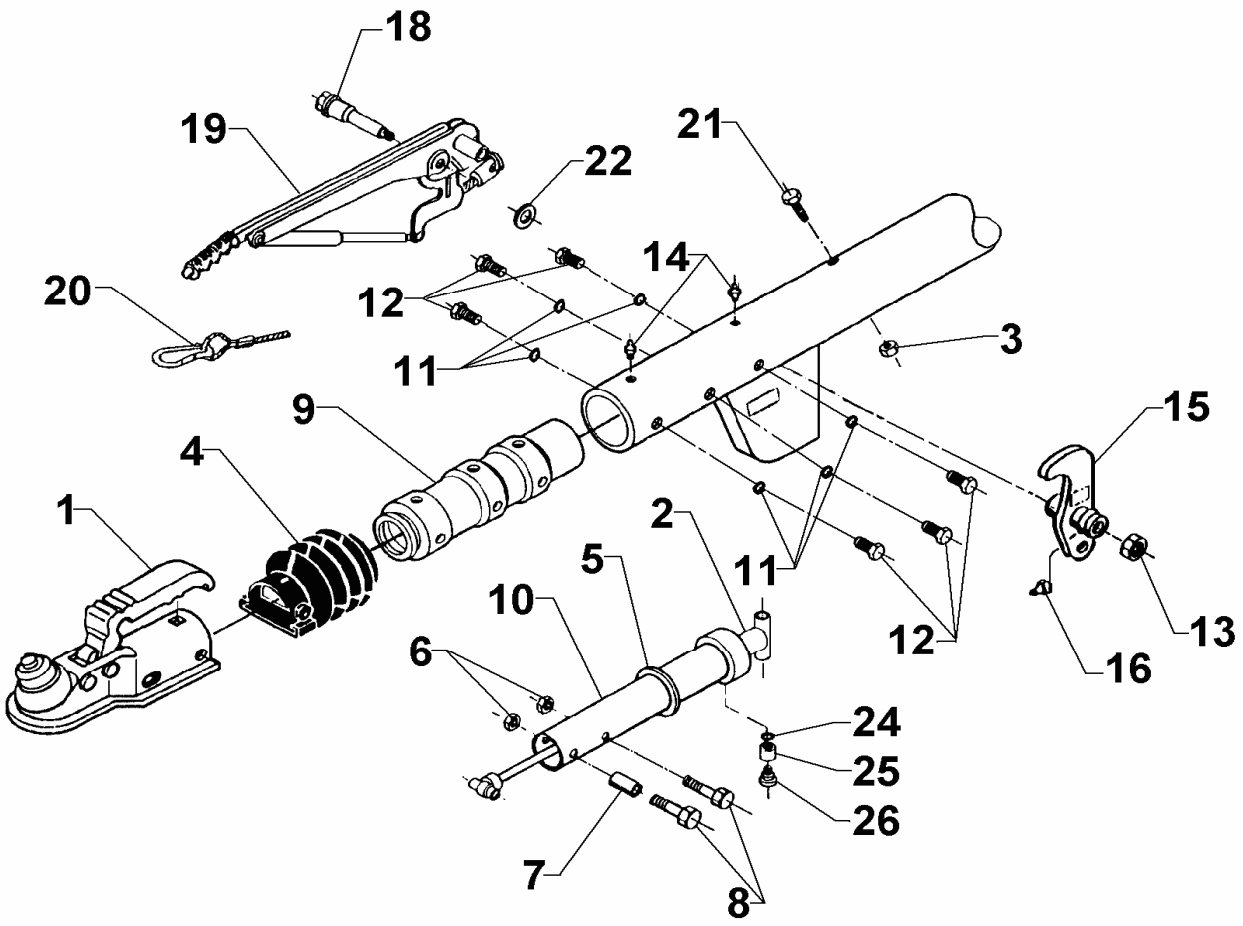

Item	Description	Drawing No.
1	DRAWCOUPLING (PURCHASE ORDER BY TYPE WITHOUT FIXING MATERIAL)	
2	SHOCK ABSORBER	583529
3	NUT HEX M12 DIN 980-V-10 A3C	700645
4	BELLOWS	366356
5	PROFILE RING	371372
6	NUT HEX M12 DIN 985-10 A3C	702750
7	BUSH	370559
8	BOLT HEX M12x70 DIN 931	700061
9	CAST AND BEARING CARTRIDGE	583367
10	DRAW TUBE WELDED	380365
11	WASHER A10,5 DIN 6798 A3C	704095
12	BOLT HEX M8x9 DIN 933 A3C	703194
13	NUT HEX AM12 DIN 985-10 A3C	702750
14	GREASE NIPPLE AM8x1 CONUS	368461
15	BELL CRANK CPL. (WITH JOINT HEAD AND GREASE NIPPLE MONT.) iH = 90:27	384655
16	GREASE NIPPLE AM6 CONUS	700203

Item	Description	Drawing No.
18	BEARING BOLT	581145
19	HAND BRAKE LEVER CPL WITH BRAKE AWAY CABLE	220094
20	BRAKE AWAY CABLE WITH HOOK	368605
21	BOLT HEX M12x90 DIN 931 ZINC-PLATED	700312
22	WASHER (19,2x34x2)	370693
24*	WASHER A8,4 DIN 6798 A3C	703466
25*	BUSH	583463
26*	BEARING BOLT	583042

* NOT AT THE ROTATABLE TYPE

AT THE TIME OF ORDER ALWAYS INDICATE ETI-NO.

DRAWBAR WITH CONNECTIONWELLS CUSTOMMIZED
(AT THE TIME OF ORDER SEE GRAVE DRAWING-NO.
OVERRUND DEVICE)

provided	ETI-No.	changed	Change No.	Reason of the change	Revisons-No.
13.11.92	811043_en	14.01.2010	FREIGABE		A