OD VKT 161S GAS SP EYE TILL 10/92

ETI- No. 811016 (Specify the order with the ETI No.)

AL-KO Spare Parts

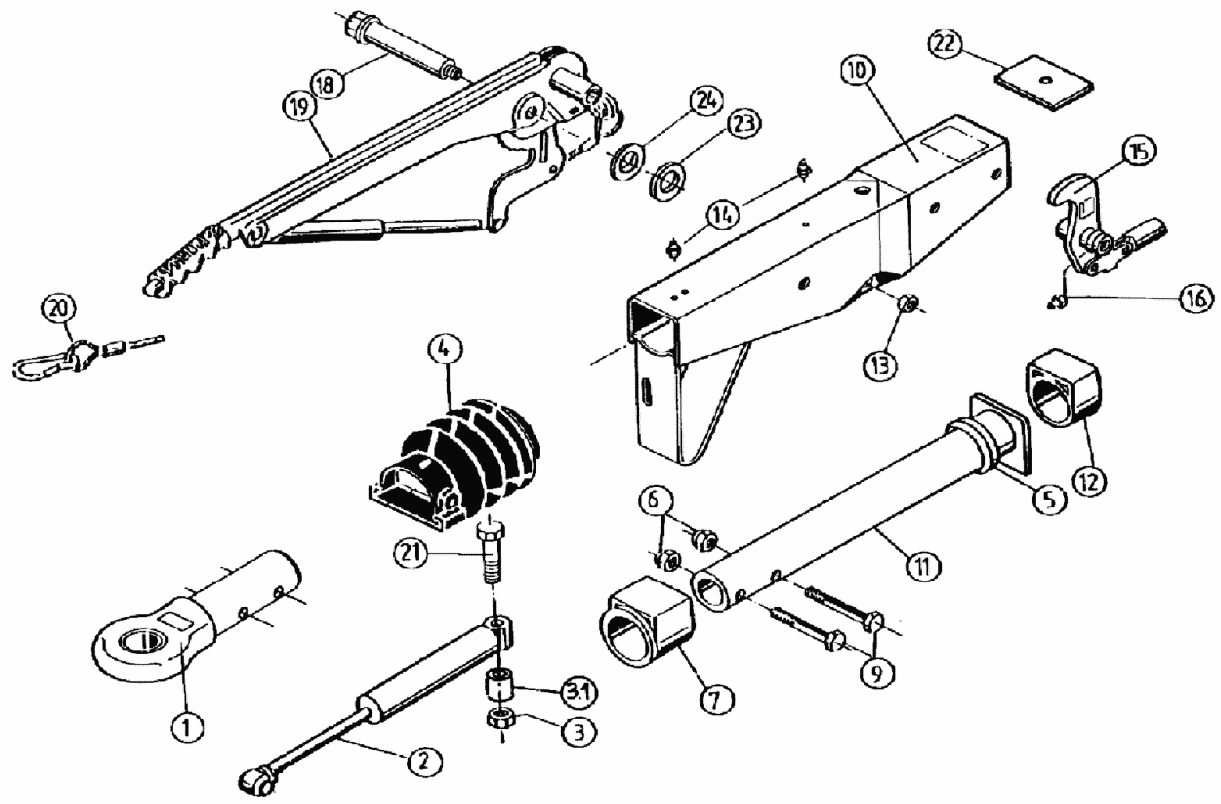

Item	Description	Drawing No.
1	DIN-DRAWBAR EYE (PURCHASE ORDER BY TYPE WITHOUT FIXING MATERIAL)	
2	SHOCK ABSORBER	370558
3	NUT HEX M12 DIN 985-10 A3C	702750
3.1	BUSH	370580
4	BELLOWS	366356
5	PROFILE RING	371372
6	NUT HEX M12 DIN 985-10 A3C	702750
7	BUSH (NOT RUB OUT)	353943
9	BOLT HEX M12x60 DIN 931	700222
10	BODY CPL WITH BUSHS OVERRUN DEVICE	AT THE TIME OF ORDER SEE GRAVE DRAWING-NO. OVERRUN DEVICE
11	DRAW TUBE WELDED	571875
12	BUSH (NOT RUB OUT)	353942
13	NUT HEX M12 DIN 985-10 A3C	7027550
14	GREASE NIPPLE AM 9X1 CONUS	375900

Item	Description	Drawing No.
15	BELL CRANK iH = 90 : X (X=GRAVE AT THE BELL CRANK)	AT THE TIME OF ORDER SEE GRAVE DRAWING-NO. OVERRUN DEVICE
16	GREASE NIPPLE AM 6 CONUS	700203
18	BEARING BOLT	2077710503
19	HAND BRAKE LEVER CPL WITH BRAKE AWAY CABLE	299229
20	BRAKE AWAY CABLE WITH HOOK	368605
21	BOLT HEX M12x105 DIN 931	703134
22	END STOP PLATE	581699
23	WASHER (17,2x30x3)	700625
24	WASHER (17x27x2)	700273

AT THE TIME OF ORDER ALWAYS INDICATE ETI-NO.

provided	ETI-No.	changed	Change No.	Reason of the change	Revisons-No.
05.03.92	811016_en	12.01.2010	FREIGABE		A