AXLE LOWERABLE BRA1800/2361 EA90GR

ETI- No. 811537 (Specify the order with the ETI No.)

Spare Parts

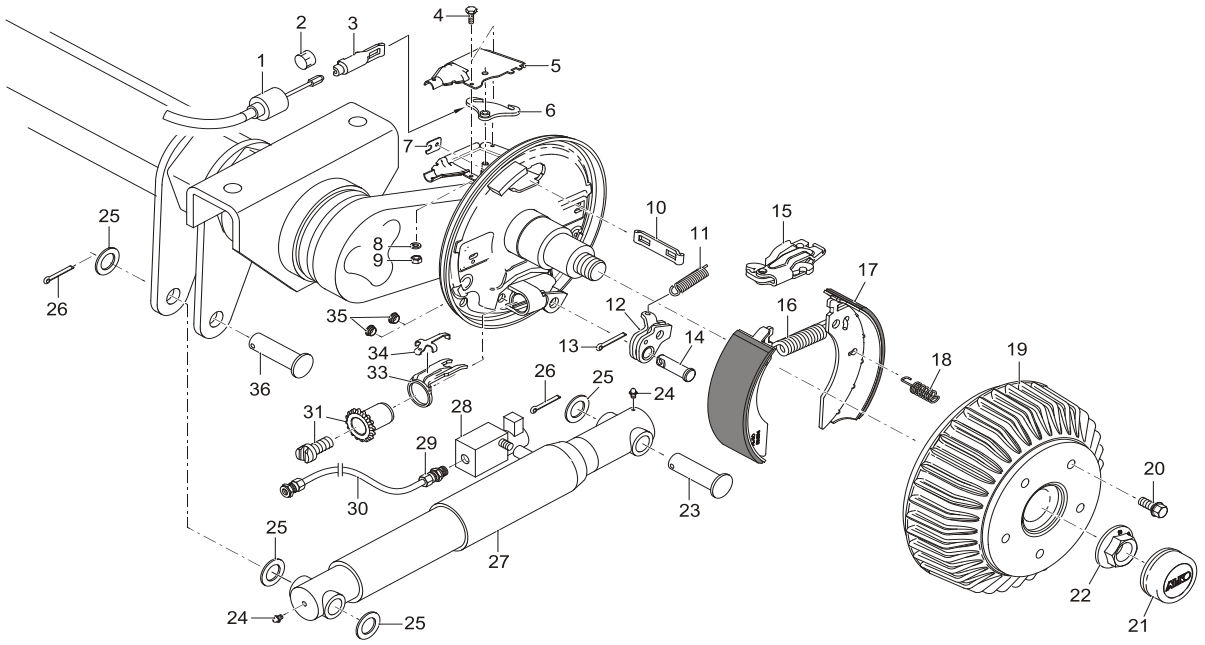

Item	Description	Part No.
1	MOUNTABLE BOWDEN CABLE 350 / 546 LONG	247281
	530 / 726 LONG	247282
	640 / 836 LONG	1213129
	770 / 966 LONG	247283
	890 / 1086 LONG	247284
	1020 / 1216 LONG	247285
	1130 / 1326 LONG	247286
	1320 / 1516 LONG	247287
2	CAP	371389
3	MOUNTING EYELET	604262
4	HEX BOLT DIN 933-M5X12-8.8-A3C	703564
5	BOWL COMPLETE LEFT	692367
	RIGHT	692368
6	BELL CRANK	692415
7	COVER PLATE	2382610002
8	SPRING RING DIN 127-B 5-A3C	704303
9	NUT HEX DIN 934-M5-8-A3C ** **	703028
10	CONNECTION EYE (EXTRA NON STANDART) ++	1361692
11	TENSION SPRING	2187370003
12	AUTO-REVERSE LEVER LEFT	571386
	RIGHT	571387
13	SPLINT PIN DIN 94-4X20-VZ	700192
14	BEARING BOLT	368651
15	SPREAD HINGE LOCK 2051 +	571510
16	TENSION SPRING	1362597

Item	Description	Part No.
17	SET BRAKE JAW FOR AXLE INCL (COVER PLATE,TENSION SPRING,PRESSURE SPRING)	1224393
18	PRESSURE SPRING	2088800003
19	BRAKE DRUM COMPLETE WITH BEARINGS Ø112X5 M12X1.5	573194
	SPARE PARTS SET: 1X BEARING, 1X CIRCLIP, 1X FLANGE NUT	1224805
20	WHEEL BOLT CONUS M12X1.5	2081670018
	SPHERIC M12X1,5	2081670020
21	END CAP Ø57	582505
22	FLANGE NUT M24X1.5 ** **	582506
23	BOLT	607413
24	GREASE NIPPLE CONUS DIN 71412-AS 8X1	700204
25	WASHER PA DIN 988-28X40X2	701167
26	SPLINT PIN DIN 94-5X45-A3C	701963
27	HYDRAULIC CYLINDER	606236
28	BACK PRESSURE VALVE	*
29	BRACKET SCREW CONNECTION	*
30	HYDRAULIC TUBE	*
31	ADJUSTING SCREW AND THE ADJUSTING NUT	21873708
33	COMPRESSION BINDER	368361
34	FLAT SPRING	368405
35	STOPPER	373245
36	BOLT	607412

* THIS PARTS ARE NOT CONTAINED IN THE DELIVERY CONTENTS OF AL-KO! THIS IS PARTS SUPPLIER:

FRITZ STIEFEL GmbH - HYDRAULIK - PNEUMATIK
DR. CARL-SCHWENK-STRAßE 16
D-89233 NEU-ULM BURLAFINGEN
Fax (+49) 731/717341

+ THE CENTRE OF ROTATION OF THE BRAKE LEVER MUST BE FIXED ON THE SAME SIDE AS THE BOLT OF THE AUTO-REVERSE.
++ THE OPEN SIDE OF THE CONNECTION EYE FOR THE BOWDEN CABLE MUST SHOW TO THE CENTRE OF ROTATION OF THE BRAKE LEVER.

** ** FOR SAFETY REASONS: SELF-LOCKING NUT AND SCREW WITH CHEMICAL SELF-LOCKING MUST BE USED ONCE.
AFTER UNTIGHTEN ALWAYS USE A NEW SPARE.

THE RETAIL OF INDIVIDUAL BRAKE SHOES IS NOT PERMITTED BY EU DIRECTIVE FROM 1st OF OCTOBER 2002.
ATTENTION: THE SET INCLUDES FOUR BRAKE SHOES AND THE APPENDANT TENSION SPRINGS, PRESSURE SPRINGS AND COVER PLATES.

provided	ETI-No.	changed	Change No.	Reason of the change	Revisons-No.
28.01.08	811537_en	10.12.2008	FREIGABE		A
		16.01.2011 HI	16422	SEE CHANGE NOTICE	C
		28.11.2011 BB	16740	BOWDEN CABLES CHANGED	D