WHEEL BRAKE S 2504-7 RASK 09.2012 WITH ROLLER BEARING small drum

ETI- No. 827080 (Specify the order with the ETI No.) (xx.xx.368.xxx)

Spare parts

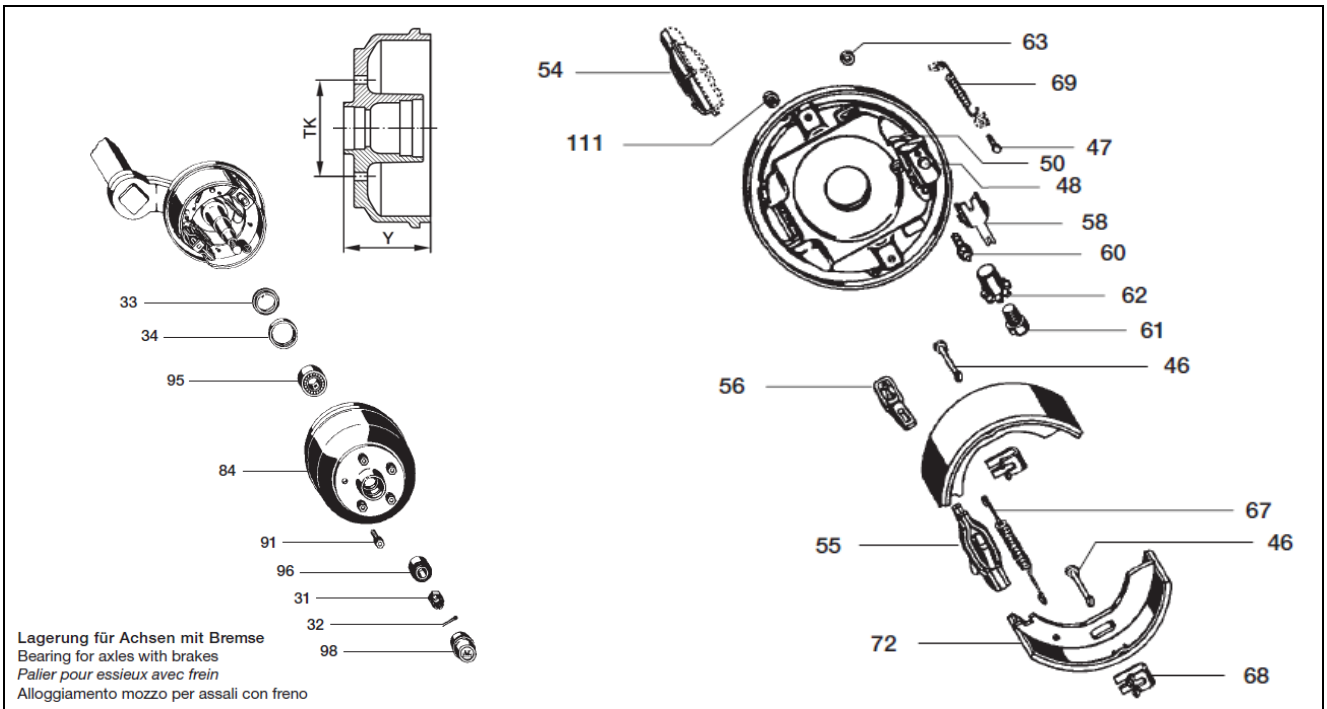

Lagerung für Achsen mit Bremse
Bearing for axles with brakes
Palier pour essieux avec frein
Alloggiamento mozzo per assali con freno

Item	Description	Material-No. (Part-No. BPW-FZT)
40	BRAKE SHOE KIT (INCL. POS. 46, 67, 68, 69, 72)	4018193 09.801.03.80.0
31	LOCKING NUT	706941 02.5207.25.04
32	SPLINT	700196 02.6201.51.01
33 / 34	SEALING RING	4018520 02.5681.95.00
46	ADAPTER SLEEVE	4015117 03.001.08.14.0
47	BOLT (DISPENSED WITH FROM 06/98)	4015423 03.084.31.02.0
48	BOLT	4015428 03.084.52.39.0
50	SHARPED PLATE, RIGHT	4003036 03.001.14.80.0
	SHARPED PLATE, LEFT	4003037 03.001.14.81.0
54	CABLE GUIDE	4016999 03.338.05.04.0
55	EXPANDING LOCK	4018034 05.359.02.05.0
56	TRACTION SHACKLE	4017078 03.396.12.02.0
58	CIRCLIP	4017028 03.350.20.12.0
60	ADJUSTING BOLT	4016493 03.276.11.05.0
61	SCREW	4017012 03.341.01.12.0
62	ADJUSTING NUT	4016291 03.263.91.01.0
63	LOCK	4018316 02.3301.09.02

Item	Description	Material-No. (Part-No. BPW-FZT)
67	RETURN SPRING	4017089 03.397.21.14.0
68	CLAMPING SPRING	4017029 03.352.00.04.0
69	RETURN SPRING (DISPENSED WITH FROM 06/98)	4017082 03.397.10.02.0
	(FROM 06/98)	4017083 03.397.10.03.0
84	DRUM HUB 5 x M 12 x 1,5 TK 112, Y = 100	4016481 03.274.09.33.0
91	WHEEL STUD SPHERICAL R 12 / SW 19	4018379 02.5043.10.00
	SPHERICAL R 14 / SW 19	4016818 03.296.60.13.0
	TAPER 60° / SW 19	2081670018 02.5043.11.00
95	ROLLERBEARING	4014974 02.6404.35.00
96	ROLLERBEARING	4014964 02.6401.25.00
98	CAP	4016154 03.211.02.02.0
110/111	PLUG	4018346 02.3704.65.00

* ATTENTION: AFTER INSTALLATION OF THE BUSHES THE INNER DIAMETER MUST BEI REAMED TO PARTICULAR SIZE OF THE DRAW TUBE.
** FOR SAFETY REASONS: SELF-LOCKING NUT AND SCREW WITH CHEMICAL / MECHANICAL SELF-LOCKING MUST BE USED ONCE. AFTER UNTIGHTEN ALWAYS USE A NEW SPARE.

provided	ETI-No.	changed	Change No.	Reason of the change	Revisons-No.
09.04.18 J.B.	827080_en				