AXLE LOWERABLE BRA1600/2051EA/TA 90GR

ETI- Nr. 811604 (Specify the order with the ETI No.)

Ersatzteile

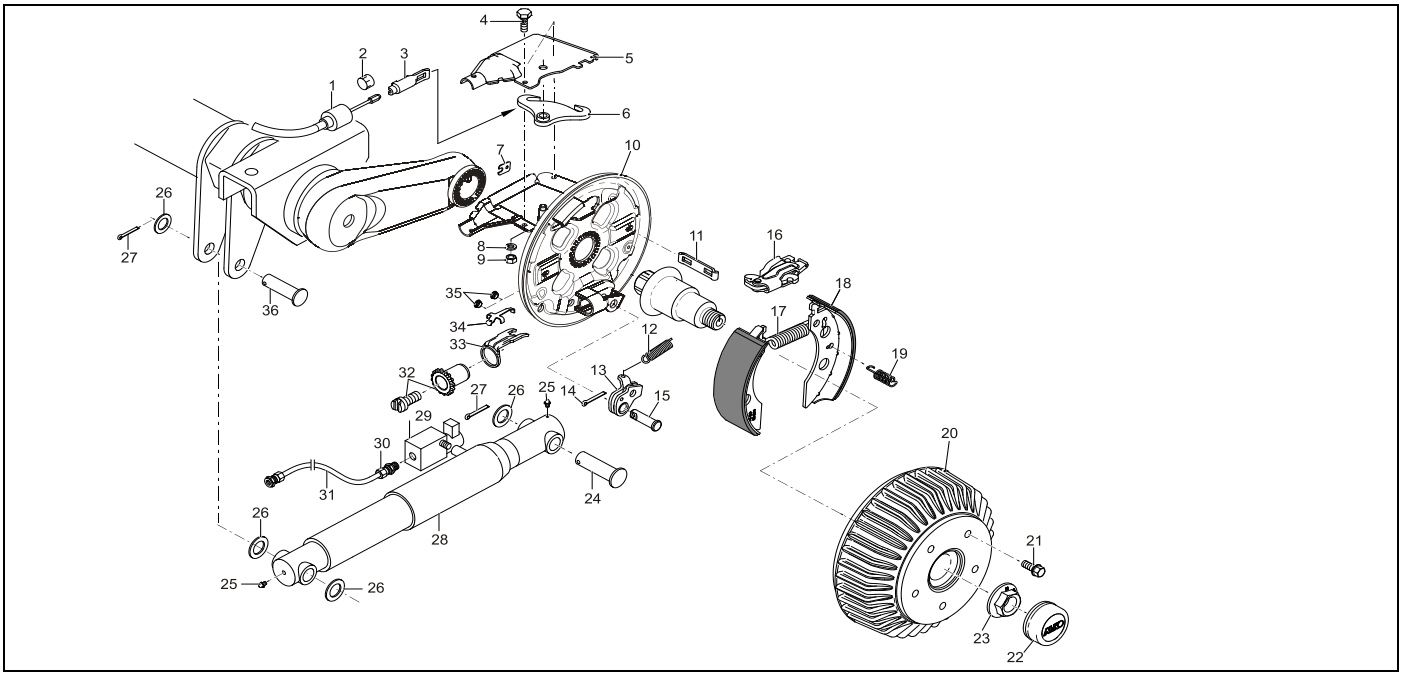

Pos.	Bezeichnung	Part-Nr.
1	MOUNTABLE BOWDEN CABLE 890 / 1086 LONG	247284
	1020 / 1216 LONG	247285
	1130 / 1326 LONG	247286
	1320 / 1516 LONG	247287
	1430 / 1626 LONG	247288
	1620 / 1816 LONG	247289
	1790 / 1986 LONG	247290
2	CAP	371389
3	CONNECTION EYE	604262
4	HEX BOLT DIN 933-M5x12-8.8-A3C	703564
5	BOWL COMPLETE LEFT	692367
	RIGHT	692368
6	BELL CRANK	692415
7	COVER PLATE	2382610002
8	SPRING RING DIN 127-B 5-A3C	704303
9	NUT HEX DIN 934-M5-8-A3C ** **	703028
10	BRAKING PLATE LEFT 2051	1366845
	RIGHT 2051	1366846
11	CONNECTION EYE (EXTRA NON STANDART) ++	1361692
12	TENSION SPRING	2187370003
13	AUTO-REVERSE LEVER LEFT	571386
	RIGHT	571387
14	SPLINT PIN DIN 94 4X20-VZ	700192
15	BEARING BOLT	368651
16	SPREAD HINGE LOCK 2051 +	571510

Pos.	Bezeichnung	Part-Nr.
17	TENSION SPRING	1362597
18	SET BRAKE JAW FOR AXLE INCL (COVER PLATE,TENSION SPRING,PRESSURE SPRING)	1224783
19	PRESSURE SPRING	2088800003
20	BRAKE DRUM COMPLETE WITH BEARINGS Ø112X5 M12X1.5	586450
	SPARE PARTS SET: 1X BEARING, 1X CIRCLIP, 1X FLANGE NUT	1224803
21	WHEEL BOLT CONUS M12x1,5	2081670018
	SPHERIC M12x1,5	2081670020
22	END CAP Ø65	582505
23	FLANGE NUT M27X2 ** **	582506
24	BOLT SINGLE AXLE	1367509
	TANDEM AXLE	1310454
25	GREASE NIPPLE CONUS DIN 71412-AS 8X1	700204
26	WASHER PA DIN 988-28X40X2	701167
27	SPLINT PIN DIN 94-5X45-A3C	701963
28	HYDRAULIC CYLINDER SINGLE AXLE	1367329
	TANDEM AXLE	1337450
29	BACK PRESSURE VALVE	*
30	BRACKET SCREW CONNECTION	*
31	HYDRAULIC TUBE	*
32	ADJUSTING SCREW AND THE ADJUSTING NUT	21873708
33	COMPRESSION BINDER	368361
34	FLAT SPRING	368405
35	STOPPER	373245
36	BOLT	1310454

* THIS PARTS ARE NOT CONTAINED IN THE DELIVERY CONTENTS OF AL-KO! THIS IS PARTS SUPPLIER:

FRITZ STIEFEL GmbH - HYDRAULIK - PNEUMATIK
DR. CARL-SCHWENK-STRAßE 16
D-89233 NEU-ULM BURLAFINGEN
Fax (+49) 731/717341

+ THE CENTRE OF ROTATION OF THE BRAKE LEVER MUST BE FIXED ON THE SAME SIDE AS THE BOLT OF THE AUTO-REVERSE.
++ THE OPEN SIDE OF THE CONNECTION EYE FOR THE BOWDEN CABLE MUST SHOW TO THE CENTRE OF ROTATION OF THE BRAKE LEVER.

** ** FOR SAFETY REASONS: SELF-LOCKING NUT AND SCREW WITH CHEMICAL SELF-LOCKING MUST BE USED ONCE.
AFTER UNTIGHTEN ALWAYS USE A NEW SPARE.

THE RETAIL OF INDIVIDUAL BRAKE SHOES IS NOT PERMITTED BY EU DIRECTIVE FROM 1st OF OCTOBER 2002.
ATTENTION: THE SET INCLUDES FOUR BRAKE SHOES AND THE APPENDANT TENSION SPRINGS, PRESSURE SPRINGS AND COVER PLATES.

provided	ETI-Nummer	changed	Change-no.	Reason of the change	Revisons-No.
03.08.10	811604_de		FREIGABE		A
		16.02.2011 HI	16422	SEE CHANGE NOTICE	B
		14.02.2012 ÖJ	16740	BOWDEN CABLES CHANGED	C