WHEEL BRAKE EURO-COMPACT 2051Aa AAA 675 KG BEARING UNIT, WATER PROOF

ETI- No. 811712

(Specify the order with the ETI No.)

AL-KO Spare Parts

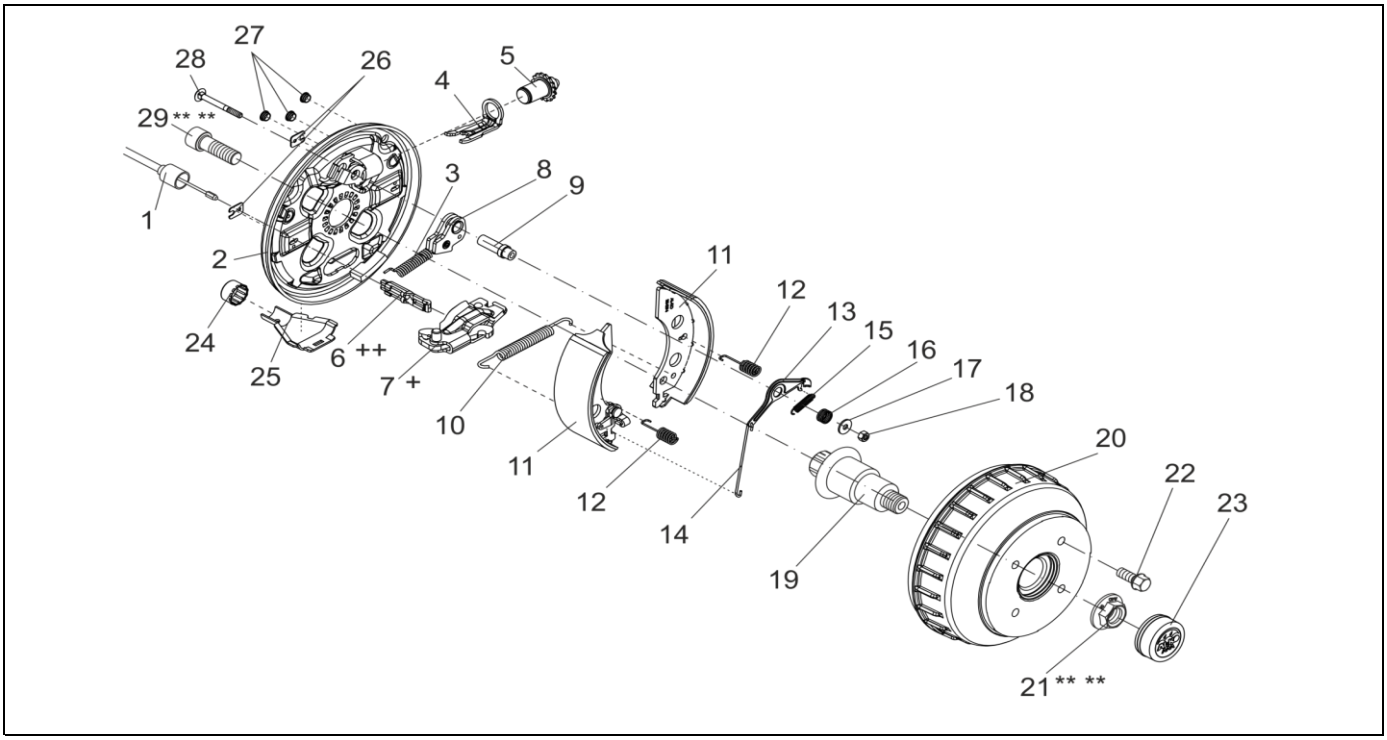

Item	Description	Part No.
1	MOUNTABLE BOWDEN CABLE 350 / 546 LONG	247281
	530 / 726 LONG	247282
	770 / 966 LONG	247283
	890 / 1086 LONG	247284
	1020 / 1216 LONG	247285
	1130 / 1326 LONG	247286
	1320 / 1516 LONG	247287
	1430 / 1626 LONG	247288
	1620 / 1816 LONG	247289
	1790 / 1986 LONG	247290
2	BRAKING PLATE LEFT 2051 AAA	1650403
	RIGHT 2051 AAA	1650404
3	TENSION SPRING	2187370003
4	BOW PRESSURE	368361
5	ADJUSTING SCREW AND THE ADJUSTING NUT LEFT 2051/2361 AAA	1650416
	ADJUSTING SCREW AND THE ADJUSTING NUT RIGHT 2051/2361 AAA	1650417
6	CONNECTION EYE ++	604262
7	SPREAD HINGE LOCK 2051/2361 AAA LEFT +	1650407
	2051/2361 AAA RIGHT	1650408
8	AUTO-REVERSE LEVER LEFT	571386
	RIGHT	571387
9	BEARING BOLT 2051/2361 AAA	1650429
10	TENSION SPRING	2082000007
11	SET BRAKE JAW FOR AXLE INCL (COVER PLATE,TENSION SPRING,PRESSURE SPRING)	1730057

Item	Description	Part No.
12	PRESSURE SPRING	2088800003
13	ADJUSTING LEVER LEFT 2051 AAA	1650468
	RIGHT 2051 AAA	1650469
14	CONNECTION WIRE 2051 AAA	1650474
15	TENSION SPRING 2051/2361 AAA	1651237
16	CONTACT PRESSURE SPRING 2051/2361 AAA	694449
17	WASHER DIN 9021-ST-A-A6.4-A3C	703452
18	HEX NUT DIN 980-V M6-8-A3C	703425
19	STUB AXLE 2051	605495
20	BRAKE DRUM COMPLETE WITH BEARINGS Ø112X5 M12X1.5	1312690
	Ø100X4 M12X1.5	1312689
	SPARE PARTS SET: 1X BEARING, 1X CIRCLIP, 1X FLANGE NUT	1224804
21	FLANGE NUT M24X1.5 ** **	581200
22	WHEEL BOLT SPHERIC M12x1,5	2081670020
	CONUS M12X1.5	2081670018
	SPHERIC M12X1.5 (R13)	372138
23	END CAP Ø57 2051AAA WATER PROOF	1651848
24	PROTECTIVE CAP	371389
25	CUP	371387
26	COVER PLATE	2382610002
27	STOPPER RED	694430
28	CARRIAGE BOLT DIN 603-M6X60-8.8-A3C	706131
29	CYLINDER BOLT WITH HEXAGON SOCKET DIN 912-M20X60 ** **	704096

+ THE CENTRE OF ROTATION OF THE BRAKE LEVER MUST BE FIXED ON THE SAME SIDE AS THE BOLT OF THE AUTO-REVERSE.
++ THE OPEN SIDE OF THE CONNECTION EYE FOR THE BOWDEN CABLE MUST SHOW TO THE CENTRE OF ROTATION OF THE BRAKE LEVER.

** ** FOR SAFETY REASONS: SELF-LOCKING NUT AND SCREW WITH CHEMICAL SELF-LOCKING MUST BE USED ONCE.
AFTER UNTIGHTEN ALWAYS USE A NEW SPARE.

THE RETAIL OF INDIVIDUAL BRAKE SHOES IS NOT PERMITTED BY EU DIRECTIVE FROM 1st OF OCTOBER 2002.
ATTENTION: THE SET INCLUDES FOUR BRAKE SHOES AND THE APPENDANT TENSION SPRINGS, PRESSURE SPRINGS AND COVER PLATES.

provided	ETI-No.	changed	Change No.	Reason of the change	Revisons-No.
05.02.14ÖJ	811712_en		FREIGABE		A