OVERRUN DEVICE V 2,8VB/1-C 3500KG DRAWBAR EYE AKS3504 AK351 BUILD UP

ETI- No. 811662 (Specify the order with the ETI No.)

AL-KO Spare Parts

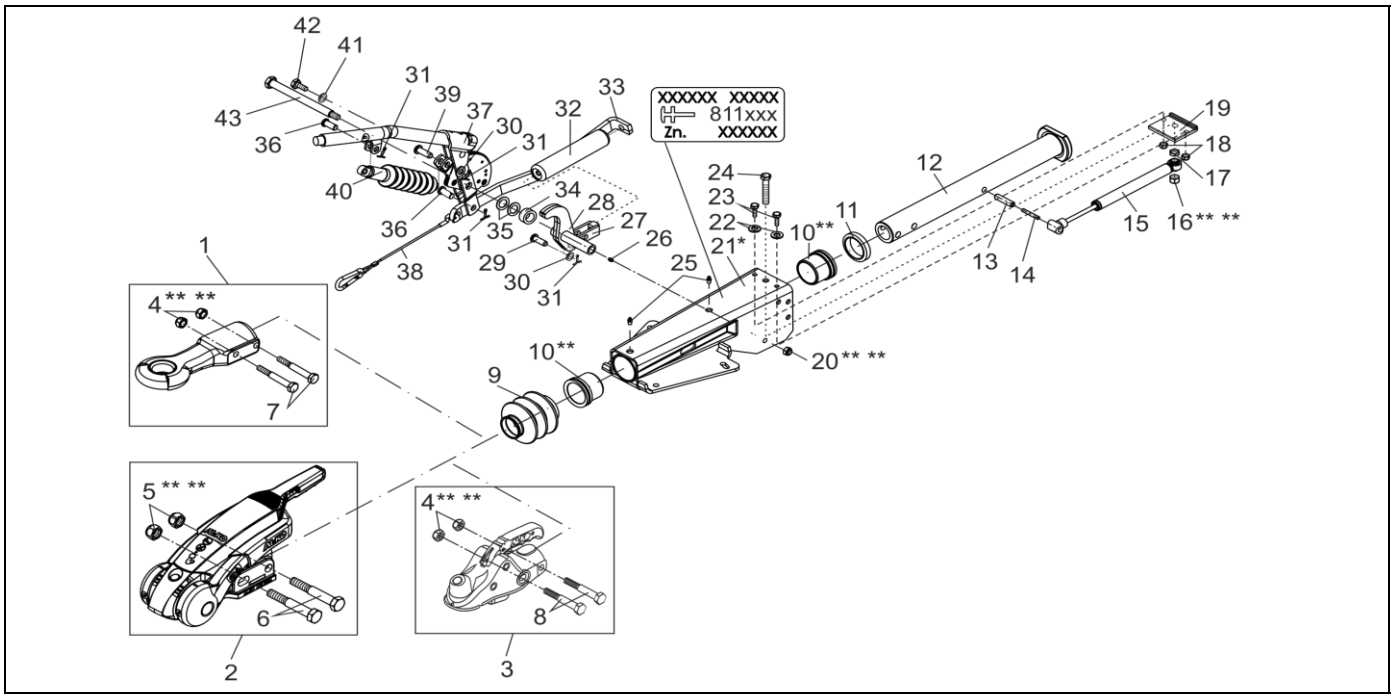

Item	Description	Part No.
1	DRAWBAR EYE ENGLAND Ø 30 INCL. (POS.4,7)	1224112
	ENGLAND Ø 40 INCL. (POS.4,7)	1224113
	DIN Ø 40 INCL. (POS.4,7)	1224114
	ITALIEN Ø 45 INCL. (POS.4,7)	1224115
	ENGLAND Ø 50 INCL. (POS.4,7)	1224116
	FRANKREICH Ø 68 INCL. (POS.4,7)	1224117
	NATO Ø 76 INCL. (POS.4,7)	1224118
2	SAFETY COUPLING AKS 3504 INCL. (POS 5,6)	1225226
3	COUPLING AK 351 INCL. (POS.4,8)	1224391
4	HEX NUT DIN 985-M16-8.8-A3C ** **	704089
5	HEX NUT DIN 985-M14-10-A3C ** **	701568
6	HEX BOLT DIN 931-M14X100-10.9-A3C	705826
7	HEX BOLT DIN 931-M16X80-8.8-A3C	701778
8	HEX BOLT DIN 931-M16X100-8.8-A3C	703548
9	BELLOWS	21726605
10	BEARING BUSH **	2172660004
11	PROFILE RING	2172660003
12	DRAW TUBE	1351222
13	CLAMPING PIN DIN 1481-14X55	702371
14	CLAMPING PIN DIN 1481-8X55	702369
15	SHOCK ABSORBER	372854
16	HEX NUT DIN 980-V M14-8-A3C ** **	704067
17	HEX NUT DIN 439-M14-04-A3C	701854
18	HEX NUT DIN 985-M10-10-A3C	700122
19	END STOP PLATE	21783404
20	HEX NUT DIN 985-M12-10-A3C ** **	702750
21	HOUSING	*

Item	Description	Part No.
22	WASHER DIN125-A10.5-A3C	700139
23	HEX BOLT DIN 933-M10X30-8.8-A3C	702130
24	HEX BOLT DIN 933-M14X80-8.8-A3C	701514
25	GREASE NIPPLE CONUS DIN 71412-AS 8X1	375900
26	GREASE NIPPLE CONUS DIN 71412-AS 6X1	700203
27	FORK HEAD	21783407
28	BELL CRANK (INCL. GREASE NIPPLE CONUS) iH = 90/30	1351773
	BELL CRANK (INCL. GREASE NIPPLE CONUS) iH = 90/32	354264
	BELL CRANK (INCL. GREASE NIPPLE CONUS) iH = 90/35.5	387959
29	BOLT DIN 1444-12X40X34.5-EN2	702857
30	WASHER DIN125-A13-A3C	700140
31	SPLINT PIN DIN 94-3.2X20-A3C	702004
32	SPRING CYLINDER	21783408
33	TENSION BRACKET	353137
34	BUSH	353140
35	WASHER POLYAMID	2075750006
36	BOLT	358533
37	HAND BRAKE LEVER STRAIGHT INCL. BRAKE AWAY CABLE	220297
38	BRAKE AWAY CABLE FOR HAND BRAKE LEVER	209385
39	BOLT DIN 1444-12X35X29.5-EN2	701575
40	GAS SPRING	603896
41	SPRING RING DIN 127-B 12-A3C	702000
42	HEX BOLT DIN 933-M12X25-8.8-A3C	701958
43	BEARING BOLT	21783406

* ONLY COMPLETE OVERRUN DEVICE AVAILABLE, SEE IMPRINT ZN.-NR.

* * ATTENTION: AFTER FITTING THE BEARING BUSHES MUST BE REAMED TO THE PARTICULAR DRAW BAR DIAMETER!

** ** FOR SAFETY REASONS: SELF-LOCKING NUT AND SCREW WITH CHEMICAL SELF-LOCKING MUST BE USED ONCE. AFTER UNTIGHTEN ALWAYS USE A NEW SPARE.

provided	ETI-No.	changed	Change No.	Reason of the change	Revisons-No.
02.07.13/ÖJ	811662_en		FREIGABE		A
		02.04.14/ÖJ	17851	POS.28 NR. 387959	B