COMP-AXLE B 850 1637 FIRM KAESER

ETI- No. 811422 (Specify the order with the ETI No.)

AL-KO Spare Parts

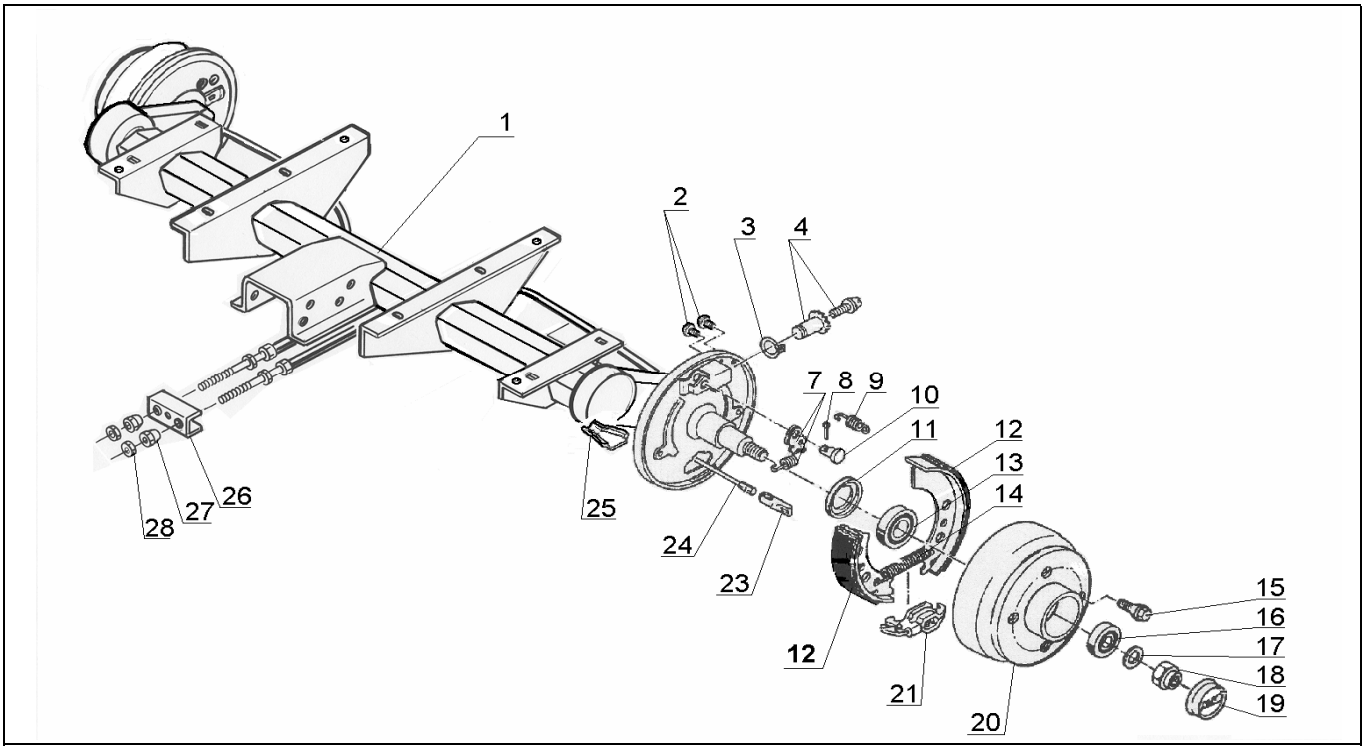

Item	Description	Drawing No.
1	AXLETUBE WELDED	1301938
2	STOPPER	373 245
3	RING SPRING	606 692
4	ADJUSTING BOLT AND ADJUSTING NUT	218 737 08
7	ASSEMBLY-KIT LEFT (auto rev. lever+spring)	646 286
7	ASSEMBLY-KIT RIGHT (auto rev. lever+spring)	646 287
8	SPLINT 4X20 DIN94	700 192
9	COMPRESSION SPRING	208 880 00 03
10	BEARING BOLT	368 651
11	SEALING RING	701 511
12	SET BRAKE JAW	1213888
13	BEARING LM 11749/710	701 512
14	TENSION SPRING	218 215 00 03
15	WHEEL BOLT	208 167 00 18
16	BEARING LM 45449/410	701 513
17	SAFETY WASHER	700 625
18	SAFETY NUT	1312008
19	END CAP	238 125 00 03
20	BRAKE DRUM CPL WITH BEARING	610 655
21	SPREAD LOCK	570 666
23	CONNECTION EYE	604 262
24	BOWDEN CABLE	247 282
25	BOWL	371 387
26	COMPESATORY PROFILE	238 576 00 02
27	SPHERIC NUT M8	208 889 00 05

Item	Description	Drawing No.
28	NUT HEX M8	700 108

ATTENTION: Use safety nut pos. 18 only one time!

The retail sale of brake jaws is not permissible by EU Directive from 01.Oct 2002!

ATTENTION: Pos. 9 and 14 oddly orderable or in set brake jaw 1213888 contained.

provided	ETI-No.	changed	Change No.	Reason of the change	Revisons-No.
19.05.03	811422_en	03.08.2009	FREIGABE		A