OVERRUN DEVICE 161 HYD./VKT 100

ETI- No. 811256 (Specify the order with the ETI No.)

AL-KO Spare Parts

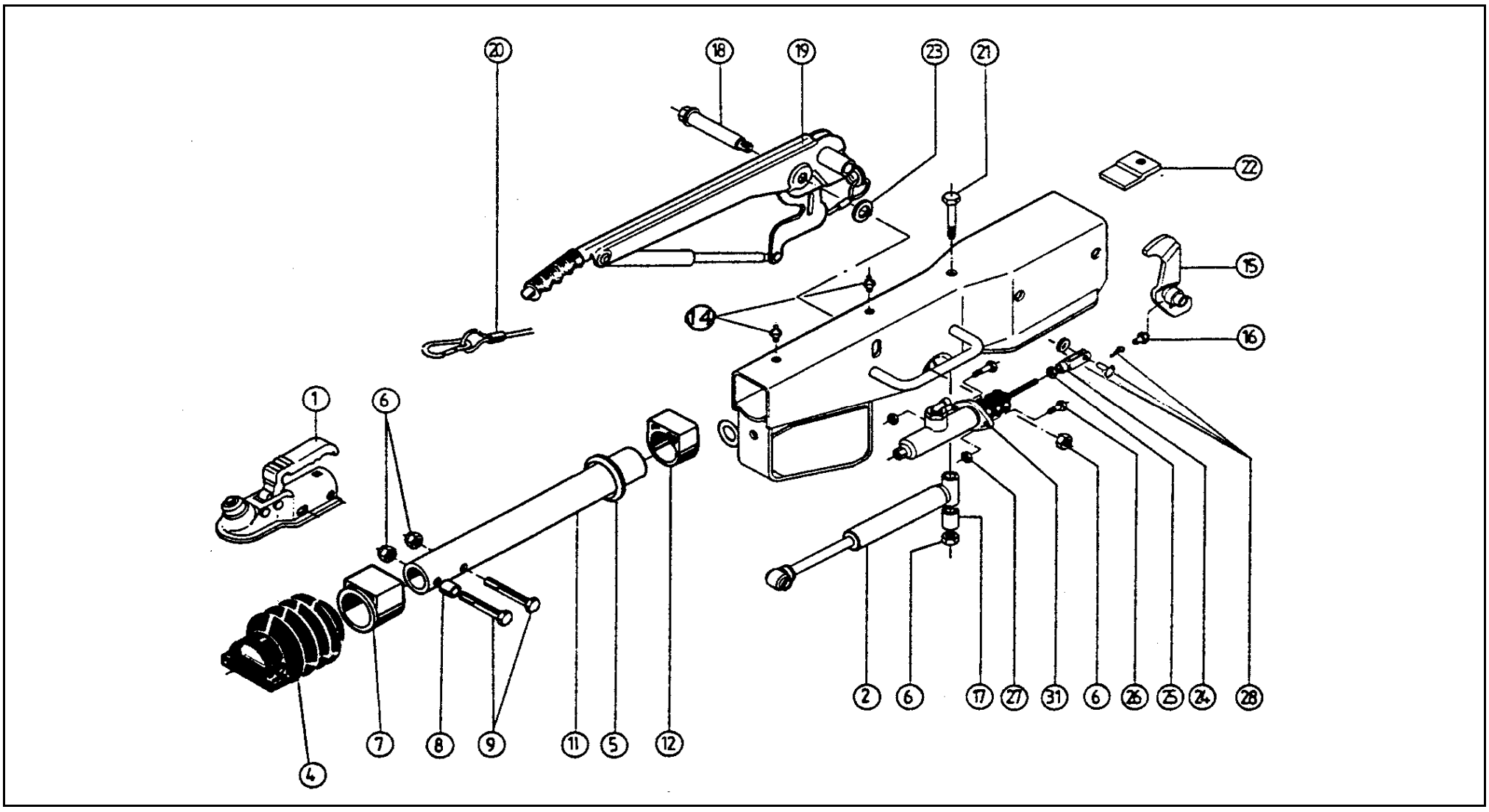

Item	Description	Drawing No.
1	COUPLING (PURCHASE ORDER BY TYPE, WITHOUT FIXING MATERIAL)	
2	SHOCK ABSORBER	370558
3	NUT HEX M12 DIN 985-10	371932
4	BELLOWS	366356
5	PROFILE RING	371372
6	NUT HEX M12 DIN 985-10 A3C	704065
7	BUSH (NOT RUB OUT)	353943
8	BUSH	357242
9	BOLT HEX M12x70 DIN 931	700061
10	BODY CPL WITH BUSHS OVERRUN DEVICE	AT THE TIME OF ORDER SEE GRAVE DRAWING-NO. OVERRUN DEVICE
11	DRAW TUBE WELDED	571874
12	BUSH (NOT RUB OUT)	353942
13	NUT HEX M12 DIN 985-10 A3C	704065
14	GREASE NIPPLE AM 8X1 CONUS	375900
15	BELL CRANK WITH GREASE NIPPLE (POS 16) iH= 90 : 30	690105
16	GREASE NIPPLE AM 6 CONUS	700203
17	BUSH	625660
18	BEARING BOLT	581145
19	HAND BRAKE LEVER CPL WITH BRAKE AWAY CABLE	1250058
20	BRAKE AWAY CABLE WITH HOOK	368605
21	BOLT HEX M12x120 DIN 931	701670

Item	Description	Drawing No.
22	END STOP PLATE	647011
23	WASHER (19,2x34x3)	370693
24	FORK HEAD 10x40 A3C DIN 71752	700739
25	NUT HEX M10	704066
26	BOLT HEX M8x55 DIN 931	700739
27	NUT HEX M8 DIN 985	700121
28	BOLT 10x28x24 DIN 1434 vz WASHER A 10,5 DIN 125 A3C SPLINT 3,2x20 DIN 94 A3C	701470 700139 702004
31	HYDRAULIC CYLINDER	1311411

AT THE TIME OF ORDER ALWAYS INDICATE ETI-NO.

provided	ETI-No.	changed	Change No.	Reason of the change	Revisons-No.
01.12.98	811256_en	11.01.2010	FREIGABE		A