OD V 251S GSP STO ST COUPL ABOVE

ETI- No. 811133 (Specify the order with the ETI No.)

AL-KO Spare Parts

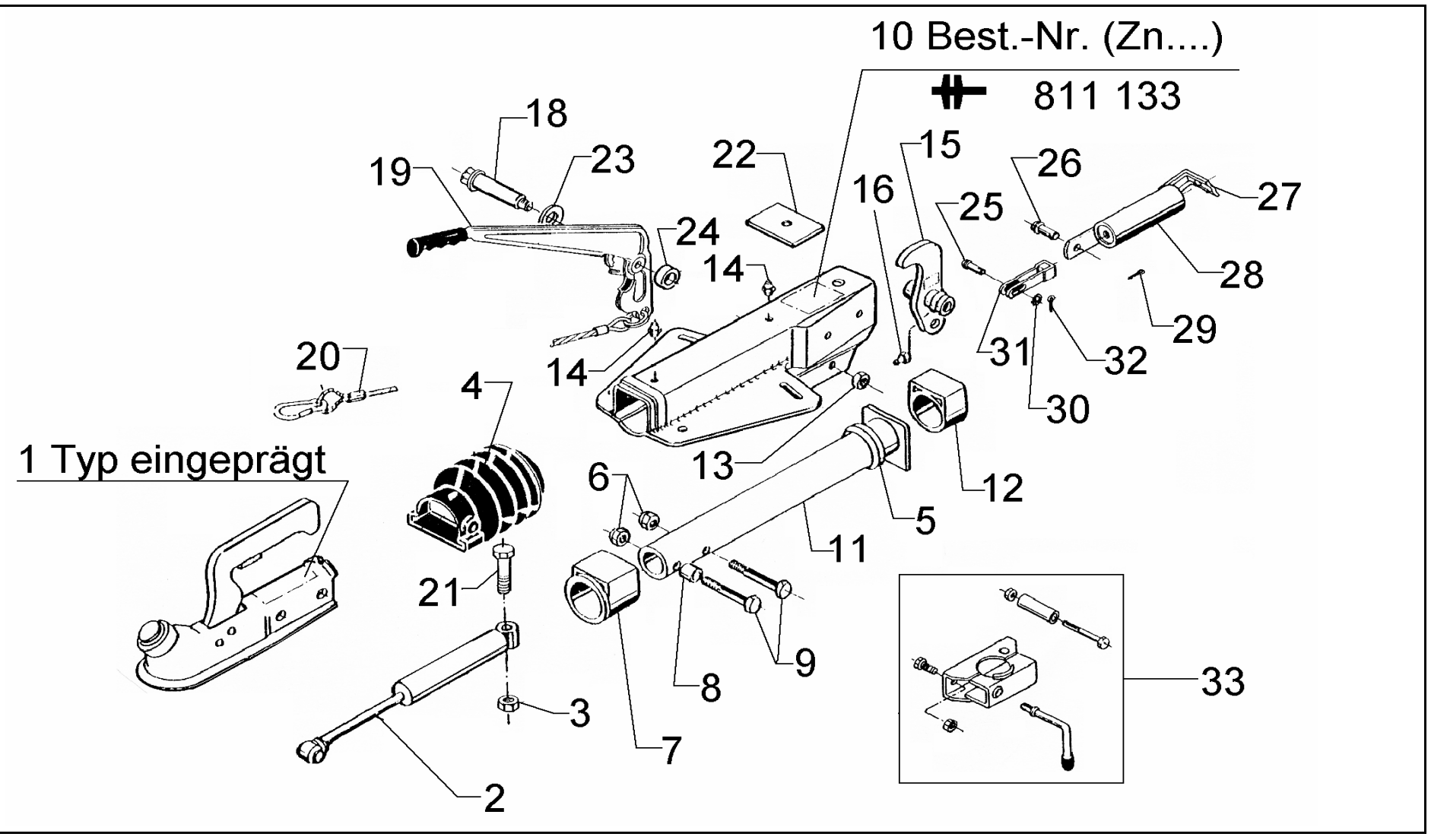

Item	Description	Drawing No.
1	COUPLING AK 252	243184
2	SHOCK ABSORBER	370589
3	NUT HEX M12 DIN 980-10 A3C	704065
4	BELLOWS	366356
5	PROIFLE RING	371372
6	NUT HEX M12 DIN 980-10 A3C	702065
7	BUSH (NOT RUB OUT)	353943
8	BUSH	357242
9	BOLT HEX M12x75 DIN 931	701959
10	BODY CPL. WITH BUSH OVERRUN DEVICE	SEE GRAVE DRAWING-NO OVERRUN DEVICE
11	DRAW TUBE WELDED	571874
12	BUSH (NOT RUB OUT)	353942
13	NUT HEX M12 DIN 985-10 A3C	702750
14	GREASE NIPPLE AM 6 CONUS	375900
15	BELL CRANK WITH FORK HEAD AND GREASE NIPPLE MONT. iH = 90:27 iH = 90:30	 380310 380468
16	GREASE NIPPLE AM 6 CONUS	700203
18	BEARING BOLT	2077710503
19	HAND BRAKE LEVER CPL. WITH BRAKE AWAY CABLE AND GEAR SEGMENT	204549
20	BRAKE AWAY CABLE WITH HOOK	368605
21	BOLT HEX M12x90 DIN 931	702823

Item	Description	Drawing No.
22	END STOP PLATE	581699
23	WASHER (17,2x30x3) DIN 125	700625
24	BUSH	358470
25	RIVET 10x25	647287
26	BOLT	2076810609
27	TENSION VINDER	2170110608
28	SPRING CYLINDER	2077050601
29	SPLINT 4x20 DIN 94	700192
30	WASHER 10,5 DIN 94	700193
31	FORK HEAD	2073890606
32	SPLINT 3,2x20 DIN 94	700191
33	CLAMP FOR TUBE 48 (RETROFIT KIT COULD ADD ON OPTIONALLY)	293020

AT THE TIME OF ORDER ALWAYS INDICATE ETI-NO.

provided	ETI-No.	changed	Change No.	Reason of the change	Revisons-No.
21.02.96	811133_de	13.09.2010 BB	16151	Pos 19 WAS 354259 AND 1251223, POS 25 WAS 702121, Pos 26 WAS 701935	B