AL-KO

QUALITY FOR LIFE

COMPREHENSIVE CATALOGUE TRAILER COMPONENTS




2


3

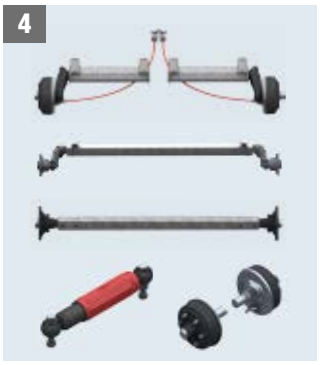
4


5


6

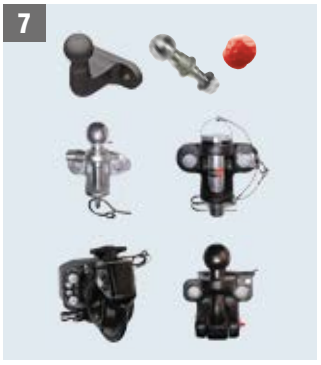
7


8


9


10


11


12


13


14


15


16


17

CONTENTS



SERVICE PACKAGE	P. 6
TOWBAR CONNECTIONS	P. 24
OVERRUN DEVICES	P. 46
AXLES	P. 146
CHASSIS	P. 306
COUPLING HEADS AND DRAWBAR EYES	P. 342
TOWING VEHICLE TOWING HITCHES	P. 386
ANTI-THEFT DEVICES	P. 414
JOCKEY WHEELS	P. 424
STEADY LEGS / EXTENDABLE CORNER STEADIES	P. 460
MUDGUARDS	P. 486
WINCHES	P. 504
TAILGATE LATCHES AND HINGES	P. 524
MANOEUVRING SYSTEMS	P. 532
ELECTRONICS	P. 542
LIGHTING SYSTEMS	P. 550
OTHER ACCESSORIES	P. 562
APPROVAL / INSTALLATION NOTES	P. 592

DIRECTIVES / ORDERING INFORMATION

RESTRICTION OF HAZARDOUS SUBSTANCES DIRECTIVE

The braked axles in this vehicle technology catalogue comply with the Restriction of Hazardous Substances Directive Article 47 (2) number 3 (asbestos-free brake pads).

ECE DIRECTIVE

The overrun devices and wheel brakes comply with ECE R 13 with all supplements.

GERMANY 100 KM/H

All listed vehicle components are designed for at least 100 km/h (see German Vehicle Licensing Regulations StVZO 15th Amendment regulation Article 30a paragraph 2).

EUROPE 140 KM/H

All listed vehicle components are designed for at least 140 km/h.

ORDERING INFORMATION

Please always quote the purchase part number in your orders.

1.) Parts with part numbers printed in red:
Delivery time 2 days

2.) Part numbers printed in black:
Delivery time 10 or 20 days

3.) Please request the delivery time for quantities of more than 10 units.

4.) Subject to technical modifications in response to progress and further development.


Your advantage


Scope of delivery


Delivery time in working days


Operation


Technology


Installation


Accessories


Surface treatment


Maintenance-free



Net weight


Minimum purchase quantity in units


Small packaging in units


Large packaging in units


GiBo – pallet cage in units


EWP – one-way pallet in units

INDEX A – Z

2LINK 546-548

A
AAA Premium Brake 304-305
Adjusting spindles 464
A-frame chassis 314-332
Anti-theft devices 414-423
ATC Trailer-Control 544-545
Automatic reverse 621-622
Automatic reverse installation instructions 621-622
Axle Bowden cables 296-298
Axle position 598
Axles 146-278

B
Barrel locks 417
Big Foot support 476
Big Foot support foot 476
Boat rollers 584-591
Bodywork regulations 600
Bowden cable holders 298
Bowden cables 296-298
Brake calculation 594-596
Brake rod 123
Brake rod adapter 123
Brake rod holder 123
Brake system 48-49
Breakaway cable guide 98-99

C
Cable winches 504-517
Centre flange 105
Clamping mounts 80
Clamping shells 288
Clamps 437, 479
Comfort Kit 475
Corner steadies 468-473
Coupling heads 344-382
Coupling point 598
Couplings 388
Cover bracket 95, 106
Cover plate 94, 106

D
Drawbar connection profiles 284-285
Drawbar eyes 383-385
Drawbar installation 24-45
Drawbars 24-45
Driving properties 597

E
EC brake calculation 594-596
Extendable corner steadies 474, 484
Extending cranks 478, 485

G
Garage wall holder 521

H
Hexagonal rubber suspension 148
Holding link 278
Hubs 186-189

J
Jacks 574-575
Jockey wheel carriers 94, 105
Jockey wheel crossmember 122
Jockey wheel flange 439
Jockey wheels 424-459

L
Lashing attachments 531
Lever fasteners 530
Lighting systems 550-561
Lightweight chassis system 316
Loose crank 434

M
MAMMUT manoeuvring system 534-537
Manoeuvring handle 104, 438
Manoeuvring systems 532-541
Mounting rail 478
Mudguards 488-503

N
Nose load 598

O
Octagon shock absorbers 290-292
Overrun devices 46-145

P
Plug holders 381, 382, 570

R
Ramps 576-582
RANGER manoeuvring system 538-541
Registration regulations 594-595
Reinforcement plate 106
Relay lever 51
Rims 612

S
Safe 423
Safety three-pack 378
Safety-Ball 419
Shackle lock 417, 419
Shock absorber 290-292
Shock absorber mounting 602-603
Sites 14-15
Skid bracket 45, 95, 104, 381
Soft dock 349, 363, 382
Soft-Ball 389
Spacer 96-97
Spare wheel carrier 572-573
Splash guard 502
Stabilisers 376-378, 400-401
Steady legs 460-485
Steering chassis 334-341
Storage boxes 571
Support step 503
Supporting system UP4 472-473

T
Tailgate hinges 528-529
Tailgate latches 526-527
Tandem adapter bracket 299
Telescopic handbrake lever 72, 101
Towballs 388
Towbar connections 24-45
Towing hitches 286-412
Towing winches 518-519
T-pole chassis 308-312
Tyres 612-613

U
UP4 supporting system 472-473

W
Weather protection 520, 570
Welded/bolted connections 286-287
Wheel bolts/nuts 300-301
Wheel brake flushing system 302
Wheel brakes 274-277, 294-295
Wheel chocks 564-569
Winches 504-523

1. SERVICE PACKAGE





SERVICE PACKAGE

DEXKO GLOBAL	8
Product differentiation	9
The AL-KO brand	10
AL-KO Vehicle Technology and its brands	11
Quality for life	12 – 13
Our service for you	14 – 15
In good hands – worldwide	16 – 17
AL-KO logistical competence	18 – 19
AL-KO technical development / testing	20 – 21
AL-KO variant construction	22 – 23

MERGER TO FORM DEXKO GLOBAL INC.

MERGER OF DEXTER AND AL-KO VEHICLE TECHNOLOGY: TOGETHER IS BETTER!

DEXKO GLOBAL

DEXTER AXLE

AL-KO QUALITY FOR LIFE

With DexKo Global Inc., we are on an expansion course around the world. We are a global market leader in our core business fields.

Last but not least, the merger with Dexter Axle shows that we think in long-term cycles and are actively shaping our commercial future with healthy growth.

The image that we have built for ourselves over a period of decades makes us the primary contact in all our business fields today.

With our strong brands, we are one of the designers of the mobile future.



AL-KO PRODUCTS IN BASIC, PLUS AND PREMIUM PROFI

ADDRESSING CUSTOMER REQUESTS IN A MORE TARGETED-DRIVEN MANNER

"One size fits all" was yesterday.
Every customer in the market has different requirements for their relevant products. A trailer for the hobby area differs accordingly from a trailer in commercial use when it comes to utilisation, loading and function. To give our customers an overview and selection of the desired product as quickly as possible, we will in the future break our products down into three categories: BASIC, PLUS and PREMIUM PROFI.

The big advantage of this product differentiation is that our customers can find precisely the product that suits them perfectly and meets their requirements optimally.

The top priority here is our philosophy: Quality for Life. To us, this guiding principle means that we offer high-quality products and services which deliver comfort, safety and joy to our customers – for a lifetime.



BASIC PRODUCT LINE

The **AL-KO BASIC** products are entirely solid and robust. They are characterised by their very good finish quality for the respective application, and are essential in day-to-day trailer use, as they fulfil the basic needs of the trailer users.
We ensure that these Basic variants also meet the high AL-KO quality standards and exceed the minimum statutory requirements.



PLUS PRODUCT LINE

The products from the **AL-KO PLUS** category convince with their high finish quality, reliability, high-quality materials and longevity. Their high stability and clever technical details meet the increased demands of day-to-day work with trailers. All products have a higher degree of functions and are very user-friendly and appealing in their design.



PREMIUM PROFI PRODUCT LINE

The **PREMIUM PROFI** products from **AL-KO** are characterised by their trail-blazing design, ingenious functions and top quality. They are innovative and traditional products for the highest demands and challenging areas of application. They are the gold standard in terms of processing, material and design. Their longevity ensures that you will have many years of joy with these products.

THE AL-KO BRAND



BRAND IDENTITY

Safety, comfort and joy are the aims of our work. Factors that are reflected in the brand itself as well as in all of our products. We love quality, we live quality. Ultimately, we have dedicated ourselves to a highly emotional message: to improve our customers' quality of life a little bit every day. This is what we at AL-KO Vehicle Technology mean by QUALITY FOR LIFE.

AL-KO VEHICLE TECHNOLOGY AND ITS BRANDS

SAWIKO
AL-KO QUALITY FOR LIFE

The name Sawiko is well-known in the motorhome market.
It stands for expertise, innovative power, premium service and mobility for virtually every caravan and/or every lightweight commercial vehicle. The specialist in carrier systems for carrying bicycles, scooters, motorcycles, etc. delivers quality products that are produced in Germany as far as possible.
"Made in Germany" at its best.



WINTERHOFF
QUALITY TRAILER SYSTEMS

For decades, the name has been a constant on the market and fits perfectly into the AL-KO Vehicle Technology portfolio with its main focus on hitches, jockey wheels and fittings.
The high Winterhoff quality is based on many years of experience, reliable employees, modern manufacture and perfect quality management, and guarantees exceptional value for money.

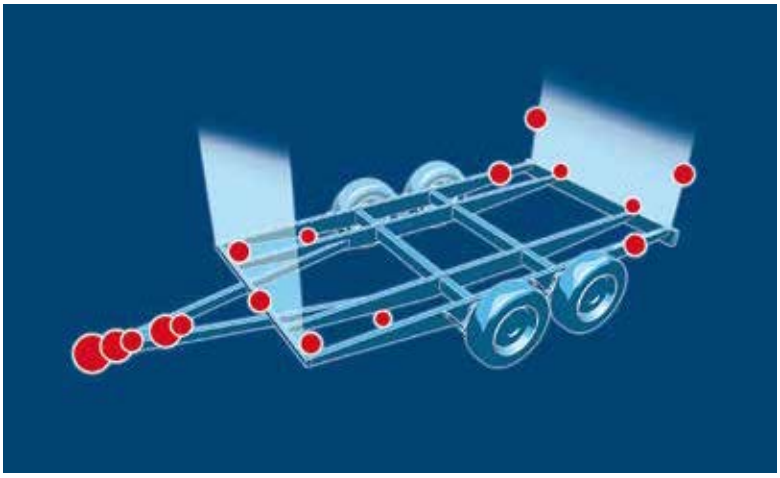

BRADLEY
AN AL-KO COMPANY

The Bradley brand stands for the highest levels of quality and safety, and thus slots seamlessly into the AL-KO brand promise.
Outstanding constructions, extreme robustness, high longevity. And more than 90 years of experience in towing hitches and coupling components.



QUALITY FOR LIFE

We love quality. We live quality. And we have the right answer for virtually every transport requirement in our sector. Our way of differentiating products into "Basic", "Plus" and "Premium" ensures that each customer can find the AL-KO solution best suited to his individual requirements.
AL-KO Vehicle Technology is safety and quality in one: from product to delivery.
We want our customers to be satisfied and successful.
Quality for life!





VEHICLE TECHNOLOGY

We are not only a byword for motorhome and caravan fans in the leisure vehicle sector: with ingenious lightweight chassis and chassis components as well as individual accessories, we guarantee safe driving and joy on journeys.

With our premium solutions in the commercial vehicles and trailers segment, we also ensure outstanding ergonomics and safety during transport. We are one of the leading global axle supplier in the lightweight weight range.

"We carry what matters": Boat trailers, delivery vehicles, slope maintenance vehicles and many more. You can trust us with your loads. We supply the vehicle components and accessories – the best basis for your tasks.

TRAINING

In our seminars, we communicate the specialist knowledge needed to keep your service and sales capabilities honed to the highest level.



TECHNOLOGY CENTRE

At AL-KO, research and development are firmly involved in the product creation process from the initial idea right through to production. The result: Innovative solutions that satisfy the most demanding requirements.



OUR SERVICE FOR YOU



OUR SITES

ALOIS KOBER GMBH
Ichenhauser Straße 14
89359 Kötz, Germany
Fon +49 82 21 97-0
info@alko-tech.com

ALOIS KOBER GMBH
Weiler Weg 5
89335 Ichenhausen, Germany
Fon +49 82 23 /40 03-0
kunststofftechnik@alko-tech.com

AL-KO DÄMPFUNGSTECHNIK GMBH
Frankenberger Landstraße 1
09661 Rossau OT Seifersbach, Germany
Fon +49 3727 99 4 99-0
info.rossau@alko-tech.com

AL-KO S.A.S.
365 Rue des industries B.P.99
71501 Louhans Cédex, France
Fon +33 38576-3500
info.fr@alko-tech.com

AL-KO KOBER LTD.
South Warwickshire Business Park, Kineton Road,
Southam, Warwickshire, CV47 0AL, UK
Fon +44 19 26 8 18-500
mail.uk@alko-tech.com

AL-KO KOBER SRL
Via G. Verdi 23
37060 Castel d'Azzano, Italy
Fon +39 045 85 46 011
info.it@alko-tech.com

AL-KO KOBER SIA
Ciekurkalna 2. line 75
LV-1026, Riga, Latvia
Fon +371 67 40 9330
al-ko@al-ko.lv

AL-KO KOBER B.V.
Diamantstraat 33
7554 TA Hengelo, Netherlands
Fon +31 74 255-9955
info.nl@alko-tech.com

AL-KO KOBER B.V.
Noorderlaan 79 bus 9
2030 Antwerpen, Belgium
Fon + 32 3 543 6110
info.be@alko-tech.com

AL-KO TECHNOLOGY AUSTRIA GMBH
Talstraße 150
6284 Ramsau im Zillertal, Austria
Fon +43 5282 3360 700
vertrieb.at@alko-tech.com

AL-KO TECHNOLOGY POLSKA SP. Z O.O.
ul. Bukowska 10, Wysogotowo
62-081 Przeźmierowo, Poland
Fon +48 61 8163966
technikapojazdowa@alko-tech.com

OOO AL-KO TECHNOLOGY RUS
Otkrytoe shosse 12/14,
Moscow, Russia Federation 107370
Fon +7 4 99 168 87 16
info@alko-tech.com.ru

Successful partnerships need to be refreshed, invigorated and created anew every day.

The **international marketing** of our products and services demands continuous contact. Continuous presence on the ground is ensured by our **global network of branches**, with which we combine our strengths and exploit synergy effects.

Customers and suppliers can find **direct contacts,** reliable **AL-KO quality** and comprehensive, **expert service** here!

AL-KO KOBER AB
Box 9088 J A Gahms Gata 6
400 92 Göteborg, Sweden
Fon +46 31 57 82 80
question.se@alko-tech.com

AL-KO KOBER TECHNOLOGY SRL
Str. GARII, Nr. 7,
557270 – Parc Industrial Sura Mica,
Sibiu, Romania
sales.ro@alko-tech.com

TRANSTEC ENGINEERING CO., LTD.
111 Ladprao 29, Chankasem, Chatujak
Bangkok 10900, Thailand
Fon +662 513 2571
sales@transtec-group.com

CARAC INDUSTRY CO., LTD.
1-4-2 Heiwadai, Nerima-ku
Tokyo 179-0083, Japan
Fon +81 3 3931 0220
info@carac.co.jp

AL-KO ESPANA S.A.U.
Crta. de Logrono, Km. 13
50180 Utebo Zaragoza, Spain
Fon +34 976 462280
info.zaragoza@alko-tech.com

TOV AL-KO KOBER
Brovarska Str. 156, 07442, Velyka Dymerka,
Brovary district, Kyiv region, Ukraine
Fon +38 044 392-0708
info@al-ko.ua

MARINELAND CO., LTD.
536, Kyoungchoon-ro, Kapyong-kun,
Korea 12457
Fon 031-585-5221
al-ko@marineland.kr

M. H. AL MAHROOS BSC (C)
P.O. Box 65, Manama
Bahrain
Fon +97 3 17 40 80 90
suraj@almahroos.com

AL-KO TECHNOLOGY CZ S.R.O.
Razov 1217
76312 Vizovice, Czech Republic
Fon +420 5 7745 43 42
info@al-ko.cz

AL-KO MAGYAROSZÁG KFT.
Haraszti u. 122/a
2351 Alsónémedi, Hungary
Fon +36 29 53 70-50
al-ko@al-ko.hu

ALKO TEKNOLOJİ VE ARAÇ LTD. ŞTİ.
Yukarı Dudullu Mah. İmes Sanayi Sitesi A108 Sk.No:2
34776 Ümraniye - Istanbul, Turkey
Fon +90 216 3405128
info-tr@alko-tech.com

IN GOOD HANDS – WORLDWIDE

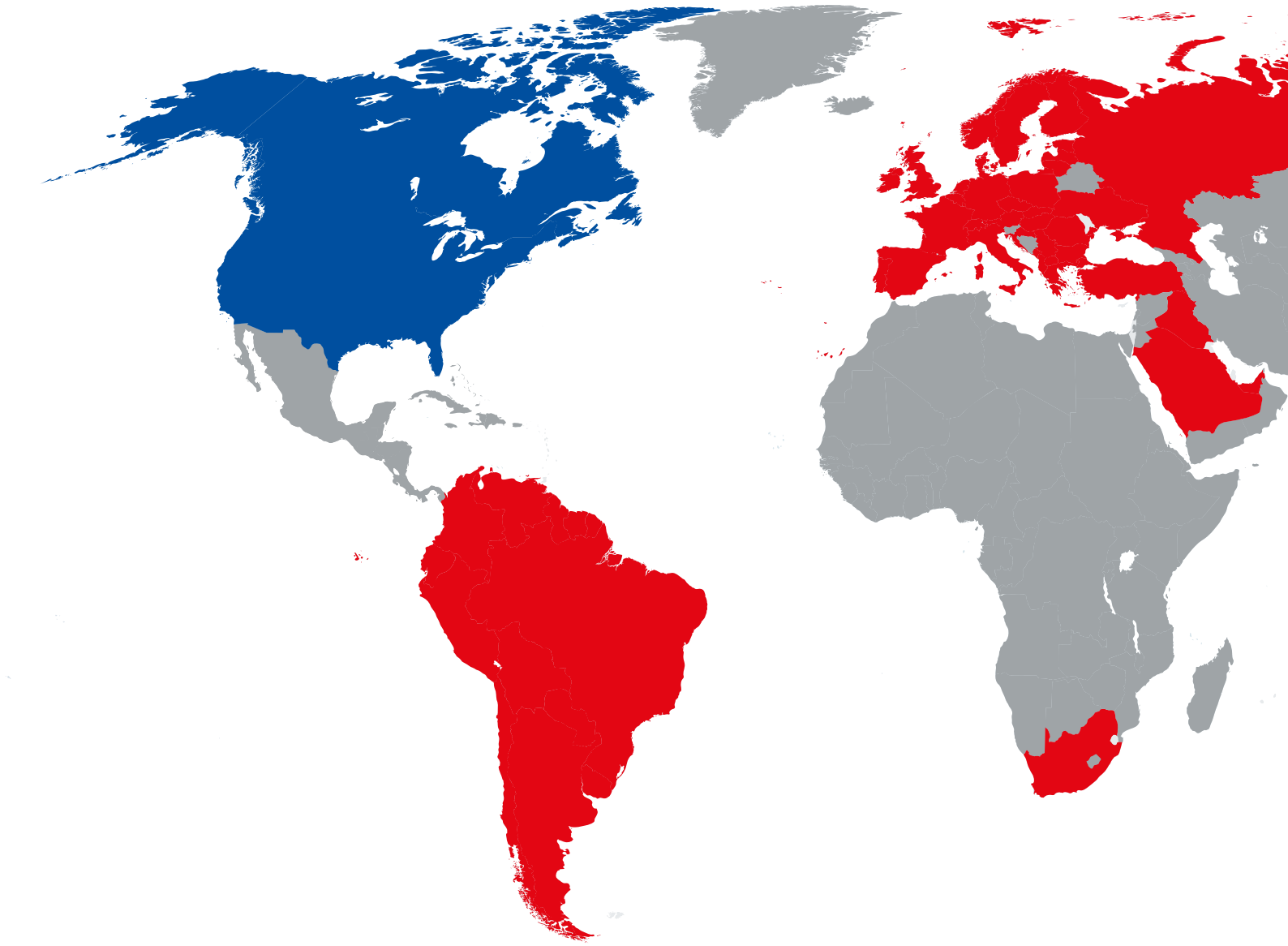

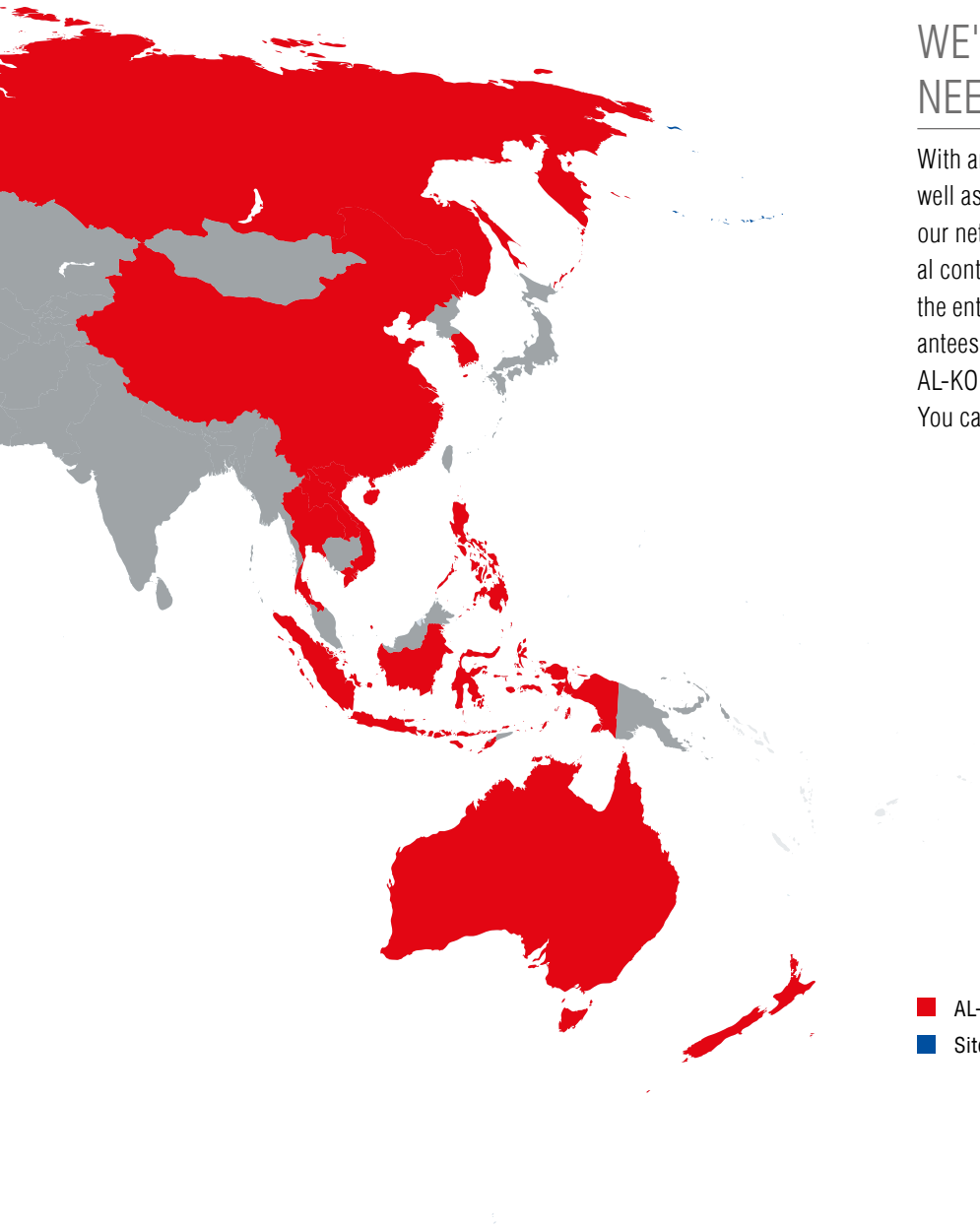

WE'RE RIGHT WHERE YOU NEED US

With around 30 production sites and sales offices as well as roughly 1,000 service stations around the world, our network guarantees constant presence and personal contact. Our sophisticated logistics network around the entire globe optimises our flow of goods and guarantees a global presence 'just-in-time'.
AL-KO quality and service are assured everywhere.
You can count on that!

- AL-KO sites and sales partners
- Sites of the Dexter Axle Company

AL-KO LOGISTICAL COMPETENCE

FOCUS IS ON THE CUSTOMER

At AL-KO, we not only attach great value to the top quality of our products, we also focus on the customer. Service quality and a smooth and efficient delivery process are vital so that each customer order is completed quickly and reliably. More than ever before in this age of globalisation.

As an internationally operating company, we know what we are talking about. Effectiveness and logistical competence are required from order processing, production and procurement up to and including distribution.

PROCESS-OPTIMISED, INTEGRATIVE ORDER PROCESSING SCM

(Supply chain management)

Not only close cooperation with our customers is an important concern to us. As a globally operating customer, we focus on efficiency and customer orientation. Process-optimised, integrative order processing (supply chain management) means the optimisation of procedures and the integration of important business processes along the supply chain. The synergy effects that result within the company and also within the individual supply chain companies ensure not only the commercial success, but also the joint success, of all involved business partners.

CLOSE COOPERATION BETWEEN AL-KO AND THE CUSTOMER

Our primary concern is close cooperation between AL-KO and our customers, because only this enables the effective and satisfactory implementation of individual projects. Together with our customers, we plan individual cooperation models, in the B2B/EDI sector, for instance, or offer process audits or tailored support in process design.

Because we believe that close and partnership-based cooperation is the foundation for a trusting business relationship.

RELIABLE CUSTOMER PLANNING CAPABILITY

Effective supply chain management enables our customers to plan precisely. Vendor-managed inventory (VMI), process reliability and our AL-KO timeline: we always guarantee reliable delivery. The use of customer forecast data also enables the optimum definition of stocking levels; short lead times optimise the supply process - you can always rely on high delivery performance, flexibility and responsiveness from us.

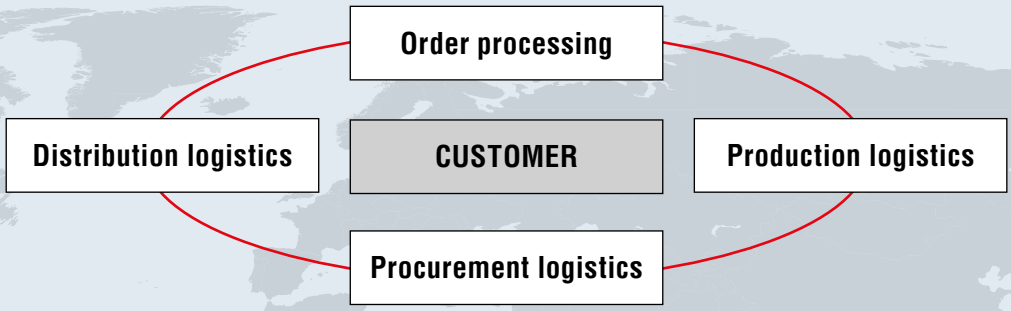

- Close cooperation between AL-KO and the customer
- Process-optimised, integrative order processing SCM
- High delivery performance, flexibility and responsiveness
- Consideration of special customer wishes
- Customer-oriented solutions and concepts
- High level of service and expertise

CONSIDERATION OF SPECIAL CUSTOMER WISHES

Whether just-in-time delivery (JIT), labelling or special packaging, we are happy to take account of your special customer wishes. Do you have a special requirement situation? No problem. Together with you, we will work out tailored solutions and individual concepts that optimally meet your requirement profile. Talk to us.

OUR SERVICE EXPERTISE IS INTERNATIONAL

Service quality is very important to us. As an international company, we operate a tight network of qualified AL-KO service centres and customer centres throughout Europe. Irrespective of whether they are located in Germany, Austria, Switzerland, Poland, England, France or Italy, for instance - you will be provided with professional and expert advice by our employees at all of our service centres. There are 410 AL-KO service stations in Germany alone.
To guarantee a constantly high level of service in the long term, we regularly offer specialist seminars and qualified training courses at our own AL-KO Academy. Here, our trade and workshop partners can undergo extensive further training on site, ensuring that their specialist knowledge is absolutely up to date.

AL-KO TECHNICAL DEVELOPMENT TESTING

In close coordination and collaboration with the state-of-the-art testing department, our engineers at the new technology centre push individual components, assemblies and even finished products to the limit every day. We are proud of our customised, state-of-the-art testing facilities that enable the most stringent endurance and wear tests under real operating conditions. In our market environment, they offer unique opportunities for the testing of individual components and entire vehicles. Only what is assessed as flawless finally receives our "Quality for Life" award!



TEST EQUIPMENT

- Roller and brake dynamometer
- Vibration platform
- Servo-hydraulic test rig
- Measurement trailer
- Salt spray chamber (environmental simulation)
- Various component test rigs for validating the AL-KO portfolio
- Prototype / sample construction
- 3 post-type lifting platforms
- 2 concertina-type lifting platforms
- State-of-the-art measurement technology
- …



Roller dynamometer



Brake dynamometer

TRAILER / CARAVAN SECTOR:

Test trailer construction
- Caravan
- Commercial

Customer test – e.g.
- Endurance test
- Special test (e.g. driving stability at 140 km/h)
- Professional test (e.g. for CCC)

Vehicle measurement
- Shaker test up to 2.0 t
- Trailer stiffness (bending)

Trailer component test
- Durability and operating stability
- Active safety (Vcrit caravan, ATC, etc.)
- MAMMUT manoeuvring drive
- Brake performance
- Homologation test
- Etc.

Sample construction
- Trade fair samples (e.g. for CSD coil spring axle, etc.)
- Test samples for customer tests
- Test trailer
- Etc.





MOTORHOME / SPECIAL VEHICLE SECTOR

Test vehicle construction
- Motorhome
- Light commercial vehicles / special vehicles

Customer test – e.g.
- Endurance test
- Special test (e.g. driving properties)
- Professional test (e.g. for RMI)

Vehicle measurements
- Centre of gravity position
- Torsional stiffness
- Bending resistance

Motor chassis testing
- Durability and operating stability
- Active safety → AL-KO ESP Certificate of Compliance
- Ride & handling → Chassis tuning
- Brake performance
- Homologation test
- Etc.

Prototyping
- Trade fair samples (e.g. all-wheel drive demonstrator, etc.)
- Test vehicles for customers
- Etc.



SERVO-HYDRAULIC TEST RIG

Execution of ECE R55 test for towbar connection parts such as e.g.
- Hitches
- Drawbars

Component and system tests
- Swing arm
- 13" twist-beam axle
- Safety belt system
- ISOFIX

Customer tests
- Floor bracket system
- Fitting systems
- Sandwich material test
- Etc.

- Latest control/regulation system technology
- Video monitored tests
- 24 h – 7 days a week – 352 days a year



AL-KO TECHNICAL DEVELOPMENT VARIANT CONSTRUCTION

At our technology centre, our design engineers develop components and complex assemblies up to production maturity, and implement your individual customer wishes.



RANGE OF TASKS

1. Variant construction
Construction + design of caravan chassis, product variant creation, installation space analysis, low-loaders + high-loaders, attachment/body advice

2. Aftersales
Technical advice on retrofitting chassis components and accessories, homologation advice for the AL-KO product range

3. Service
Provision of brake calculations and type reports for our customers, technical sales, service and product management support

PRODUCT RANGE

AS DIVERSE AS OUR CUSTOMERS – VARIABLE AND FLEXIBLE FOR ALL APPLICATIONS

Chassis dimensioning
- Length, width, height
- Perm. gross weight

Cable routing
- Bowden cables
- Handbrake cable

Manoeuvring and positioning systems
- Mammut / Ranger
- Jockey wheels
- Steadies (manual, electric)
- Wheel chocks

Safety systems
- AL-KO Trailer Control (ATC)
- Anti-snaking hitch (AKS)
- Theft protection (safety)

Axles / axle bracket
- Weight
- BC and OHF
- Variable swing arm position (driving comfort)
- Lowering function
- Braked
- Unbraked

Towbar connection
- Drawbar (rigid, removable, height-adjustable)
- Overrun devices
- Hitches

Chassis tuning
- Suspension
- Shock absorber systems

LEISURE TRAILER SECTOR

Caravan chassis

- Single axle



- Tandem axle



COMMERCIAL TRAILER SECTOR

A-frame chassis

- High-loader



- Low-loader

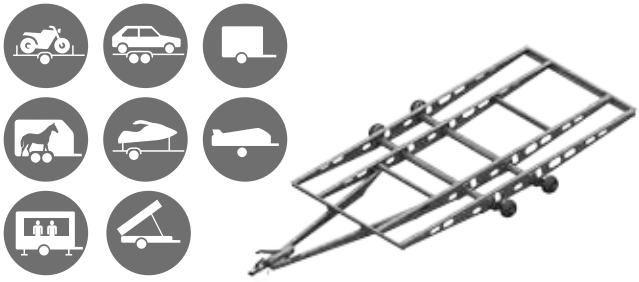

T-pole chassis

- Rigid



- Height-adjustable



Individual components

- Lowering axles



- Standard axles



- Axles with pneumatic brakes



2. DRAWBARS / TOWBAR CONNECTIONS

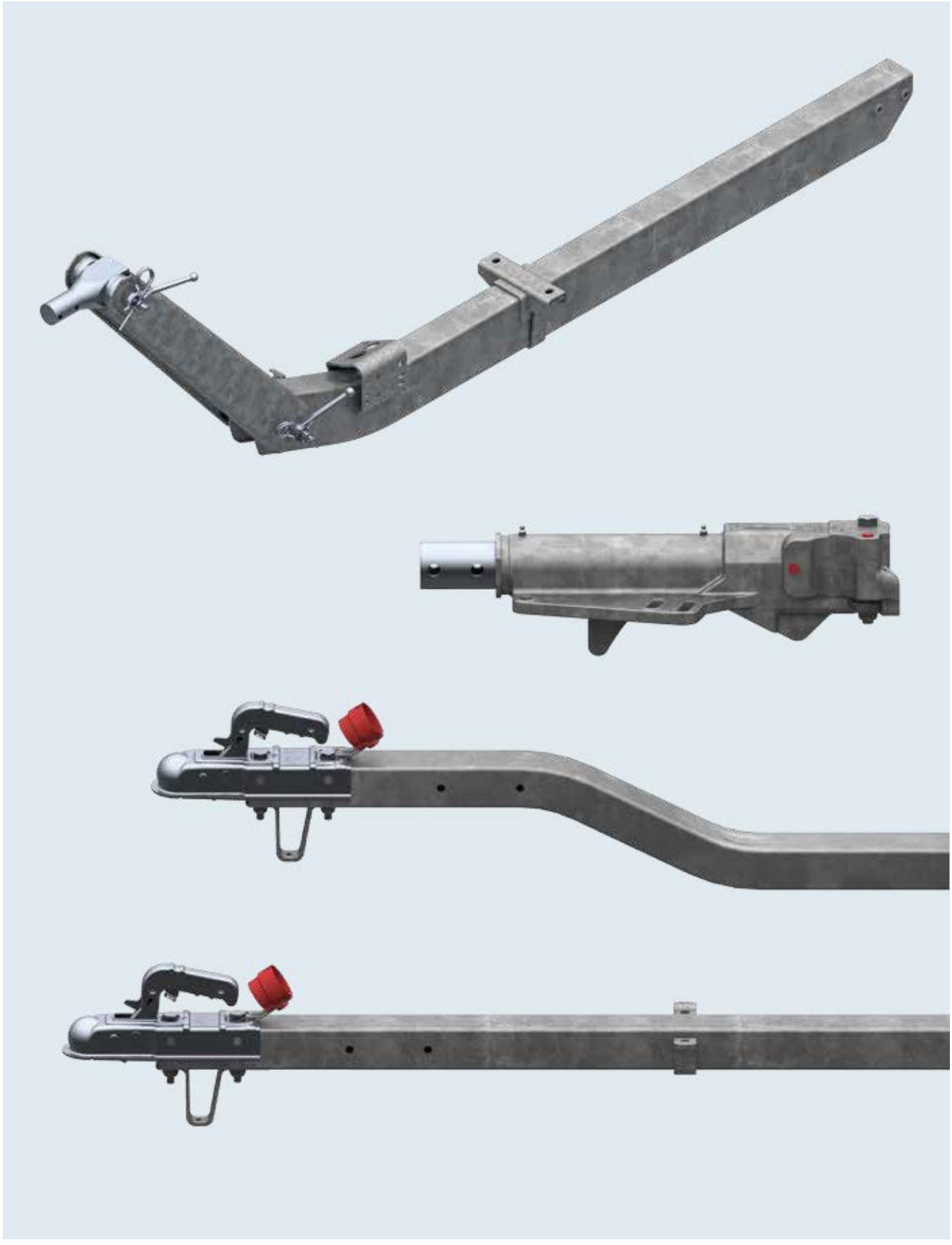

DRAWBARS / TOWBAR CONNECTIONS

Square tube drawbar, straight / cranked up to 750 kg	26 – 27
Height-adjustable towbar connections, product line, application areas	28 – 29
Towbar connection PREMIUM PROFI 70.1 VO up to 750 kg	30 – 31
Towbar connection PREMIUM PROFI 75 VU up to 750 kg	32 – 33
Towbar connection PREMIUM PROFI 102 VB up to 1,100 kg	34 – 35
Towbar connection PREMIUM PROFI 162 VB up to 1,600 kg	36 – 37
Height-adjustable drawbar PREMIUM PROFI TYP 353 VB for trailers with pneumatic brakes 3,500 kg	38 – 39
Height-adjustable drawbar PREMIUM PROFI TYP 501 VB for trailers with pneumatic brakes 5,000 kg	40 – 41
Height-adjustable drawbar PREMIUM PROFI TYP 751 VB for trailers with pneumatic brakes 6,500 kg	42 – 43
Drawbar installation V PROFI 3500 for trailers with pneumatic brakes	44
Accessories	45

DRAWBARS

Square tube straight up to 750 kg

TECHNOLOGY

Type R4 - vers. A1

GA max. 750 kg

Perm. nose load 75 kg

Coupling head type AK 7

ECE type approval no.:
E1 55R-01 0388

YOUR ADVANTAGE

- Standard safety indicator
- Clamp for jockey wheel, can be retrofitted

SCOPE OF DELIVERY

See drawing, inclusive

- Skid bracket 203 037
- Clamping bracket 589 087
- Plug holder 218 260 00 04

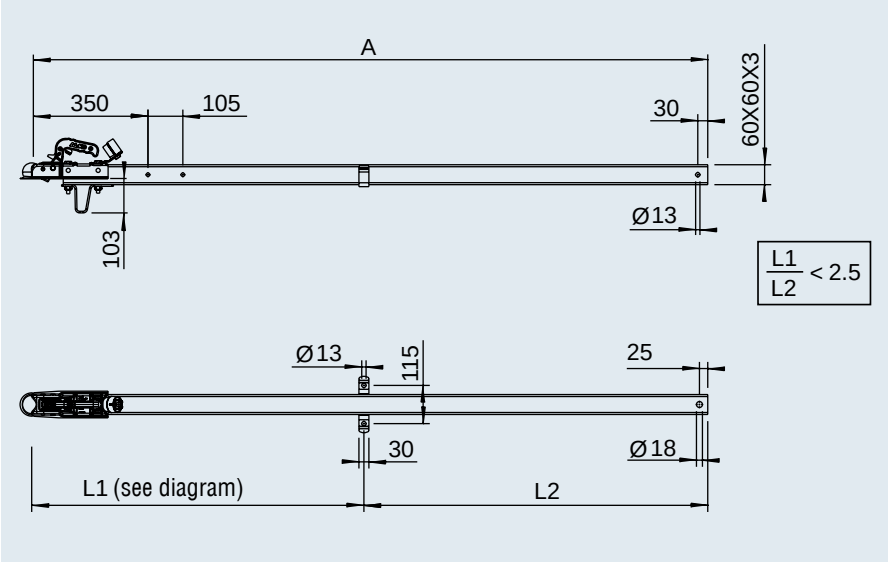

SURFACE TREATMENT

- Hot-dip galvanised



Vers. R4 - A1: square tube 60 x 60 x 3 ST 52-3
Vers. R4 - A3: square tube 60 x 60 x 4 ST 52-3
Vers. R4 - A4: square tube 60 x 60 x 5 ST 52-3
R16 - vers. A: square tube 70 x 70 x 4 ST 52-3

SAP: ZUGVERBNDG VKT R4/A1

Version A1

Part no.	Dimension A (mm)				
200 350 01	1,395	8.02	–	50	10
247 960	1,555	8.89	–	50	10
200 350 02	1,715	9.76	–	50	10
200 350 03	1,875	10.63	–	50	10
247 961	2,035	11.50	–	50	2
200 350 04	2,195	12.37	–	50	10
200 350 05	2,355	13.24	–	50	10
249 096	2,515	14.00	–	50	2
200 350 06	2,675	14.87	–	50	10
200 350 07	2,835	15.74	–	50	10
247 962	2,995	16.61	–	50	10

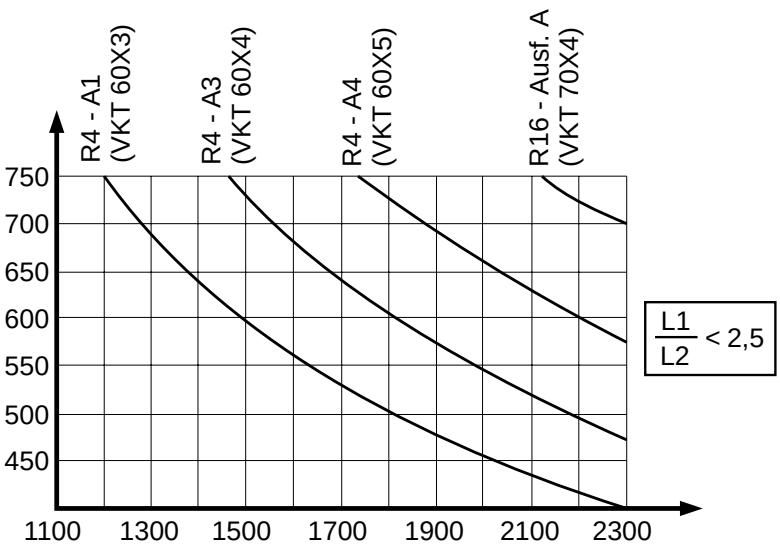

DRAWBARS

Square tube cranked up to 750 kg

TECHNOLOGY

Type K4 - vers. A1

GA max. 750 kg

Perm. nose load 75 kg

Coupling head type AK 7

ECE type approval no.:
E1 55R-01 0914

YOUR ADVANTAGE

- Standard safety indicator
- Clamp for jockey wheel, can be retrofitted

SCOPE OF DELIVERY

See drawing, inclusive

- Skid bracket 203 037
- Clamping bracket 589 087
- Plug holder 218 260 00 04

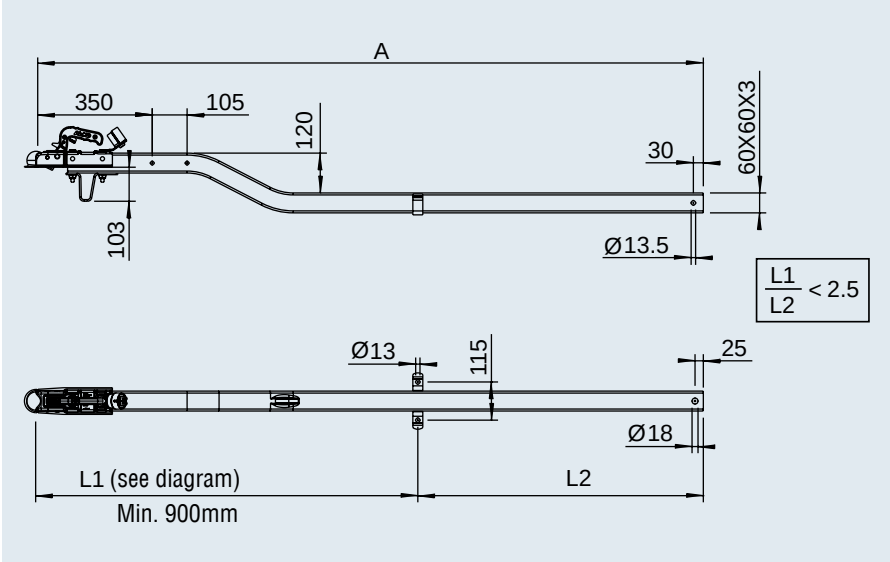

SURFACE TREATMENT

- Hot-dip galvanised



Vers. K4 - A1: Square tube 60x60x3 ST 52-3

On request:

Vers. K4 - A2: Square tube 60x60x4 ST 52-3

K1 0 - vers. A: Square tube 70x70x4 ST 52-3

SAP: ZUGVERBNDG VKT K4/A1

Version A1

Part no.	Dimension A (mm)				
200 351 01	1,370	8.02	–	50	10
200 351 02	1,530	8.89	–	50	10
200 351 03	1,690	9.76	–	50	10
200 351 04	1,850	10.63	–	50	10
121 130 0	2,010	11.50	–	50	10
200 351 05	2,170	12.37	–	50	10
200 351 06	2,330	13.24	–	50	10
200 351 07	2,490	14.00	–	50	10
200 351 08	2,650	14.87	–	50	10
200 351 09	2,810	15.74	–	50	10
200 351 10	2,970	16.61	–	50	10

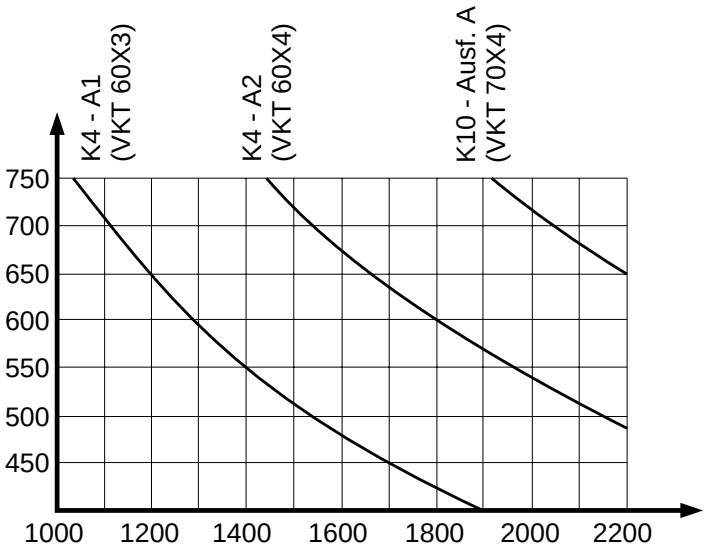

HEIGHT-ADJUSTABLE TOWBAR CONNECTION

PROFESSIONALS RELY ON QUALITY FOR LIFE FROM AL-KO

Commercial operators make high demands on man and machine. Unproductive time costs money. This is why machines and trailers have to operate round the clock. Manufacturers rely on the experience and expertise of AL-KO, the leading supplier of chassis for trailers up to 3,500 kg permitted gross weight.

The height-adjustable drawbar installation can be easily hitched to any car or truck. The quick-change system for different hitches and eyes is available for almost all European country versions.



Type	Intermediate piece Length mm	With tyre size	For axle type	Swing arm length mm	Hitching heights, "guidance values" mm Min.	Max. at angle of 0°	Max. at angle of + 3°
75 VU	750	155 R 13	UBR 700	145	165	870	1,000
70.1 VO	750	155 R 13	UBR 700	145	234	939	1,070
102 VB	750	175 R 13	UBR 1200	161.5	255	960	1,090
162 VB	750	215/70 R 14	UBR 1800	175	307	1,012	1,140
353 VB	750	185 R 14 C	BL 1800	175	140	845	975
501 VB	750	215/75 R 17.5	BL 2700	200	185	890	1,017
751 VB	600	215/75 R 17.5	BL 3000	175	70	775	905

IMPORTANT!

All values have been determined in loaded condition at nominal load. Permissible deviation in hitching heights according to the Professional Association of Vehicle Operators in Germany less than 3° horizontally.

SAMPLE APPLICATIONS

Light tower, generator, compressor, high-pressure cleaner, mortar pumps, mini diggers and lifting platforms

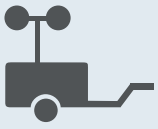

Product line	PREMIUM PROFI
Product name	**Towbar connection toothed washer type?**
Suitable for trailers with mobile equipment (so there is no danger of overloading)	Yes
Suitable for professionally used transport trailers (Danger of overloading)	Yes
Max. permitted gross weights	750 kg, 1,100 kg, 1,600 kg, 3,500 kg, 5,000 kg, 6,500 kg
Surface treatment	Hot-dip galvanised, chrome VI-free
Mounting of the drawbar eyes	External mounting – the eyes can be pushed onto the pull bar from the front
Drawbar section	Stable rectangular section with welded-in toothed washers
Number of tooth profiles on the upper and lower adjusting point (areas exposed to high load)	2 pairs (toothed washers) = reinforced version
Hitching far below the loading platform (truck according to standard)	Possible
Park/transport position of the OH at 90°	Possible
Height adjustment by 1 person	Not possible
Time requirement for adjusting	Guide value approx. 2 minutes
Time required for changing the hitch components	Guide value approx. 2 minutes
Minimum hitch height	See table
Maximum hitch height	See table

Adjustment range top **Adjustment range bottom**


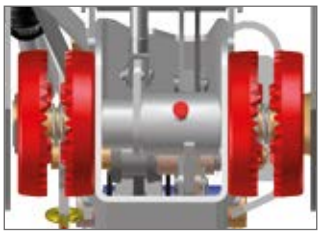
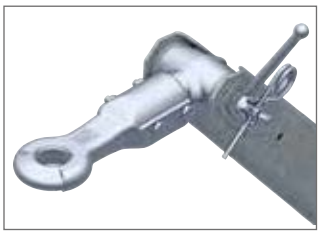


reinforced by two pairs of toothed lock washers



TOWBAR CONNECTION TOOTHED WASHER 70.1. VO

Height-adjustable with drawbar section up to 750 kg

TECHNOLOGY

Drawbar type 70.1 VO vers. C1

Intermediate piece with drawbar section

Permitted nose load 100 kg

ECE type approval no.:
E1 55R-01 1135

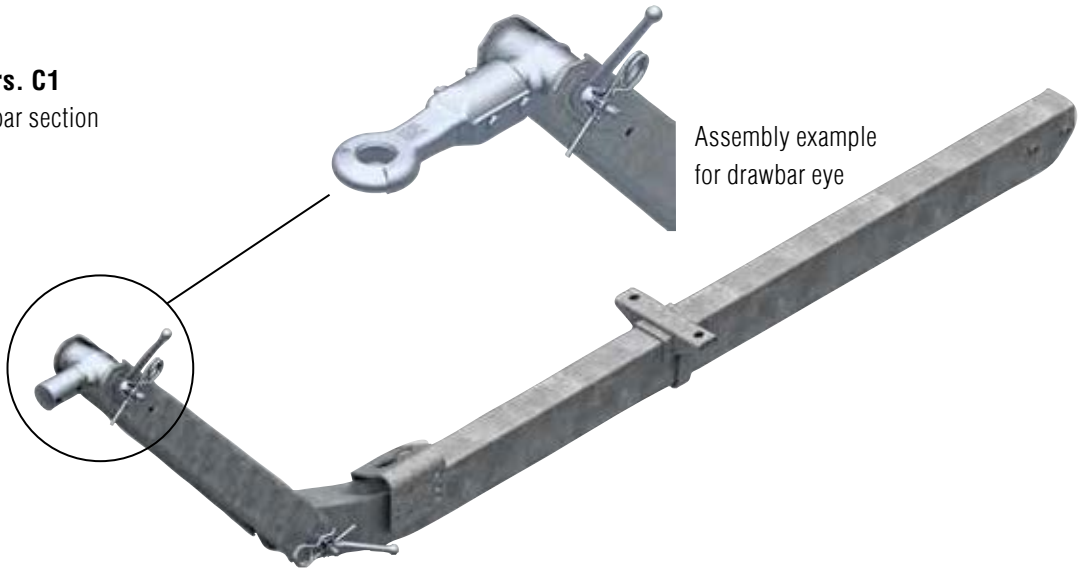

Assembly example
for drawbar eye

SAP: ZUGV ZSHB 70.1VO M DEICHSELPR

Drawbar cpl. with drawbar section mounted (without hitch components)

Part no.	Drawbar length E in mm	Total length K (at 0°) mm with DIN drawbar eye D40				
200 574 01	930	1,939	31.6	9	–	10
200 574 02	1,010	2,019	32.5	9	–	10
200 574 03	1,090	2,099	33.4	9	–	10
200 574 04	1,170	2,179	34.3	9	–	10
200 574 05	1,250	2,259	35.2	9	–	10
200 574 06	1,330	2,339	36.1	9	–	10
200 574 07	1,410	2,419	37	9	–	10
200 574 08	1,490	2,499	37.9	9	–	10
200 574 09	1,570	2,579	38.8	9	–	10
200 574 10	1,650	2,659	39.7	9	–	10
200 574 11	1,730	2,739	40.6	9	–	10
200 574 12	1,810	2,819	41.5	9	–	10
200 574 13	1,890	2,899	42.4	9	–	10
200 574 14	1,970	2,979	43.3	9	–	10
200 574 15	2,050	3,059	44.2	9	–	10
200 574 16	2,130	3,139	45.1	9	–	10
200 574 17	2,210	3,219	46	9	–	10
200 574 18	2,290	3,299	46.9	9	–	10
200 574 19	2,370	3,379	47.8	9	–	10
200 574 20	2,450	3,459	48.7	9	–	10
200 574 21	2,530	3,539	49.6	9	–	10
200 574 22	2,610	3,619	50.5	9	–	10
200 574 23	2,690	3,699	51.4	9	–	10
200 574 24	2,770	3,779	52.3	9	–	10
200 574 25	2,850	3,859	53.2	9	–	10

Drawbar cpl. with drawbar section mounted (without hitch components), special variant with parking brake mounted

200 574 26	1,970	2,979	45.3	9	–	10

Push-on hitch components: Drawbar eye connection D50 / 70.1 VO

Hitch **AK 161 - Ø 50** Part no. 1 730 808	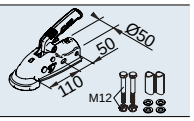	**Drawbar eyes** **England E30/A** Part no. 1 224 106	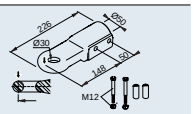
Drawbar eyes **DIN D40/F** Part no. 1 213 350	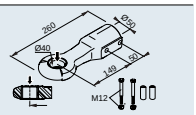	**Drawbar eyes** **England E40/A** Part no. 1 224 107	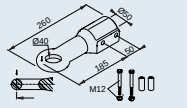
Drawbar eyes **Italy I45/F** Part no. 1 224 108	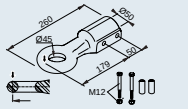	**Drawbar eyes** **DIN D50** Part no. 1 730 612	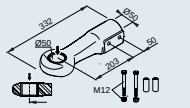
Drawbar eyes **England E50/A** Part no. 1 224 109	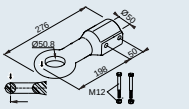	**Drawbar eyes** **Sweden VBG 57.5** Part no. 1 225 076	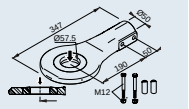
Drawbar eyes **France F68/E** Part no. 1 224 110	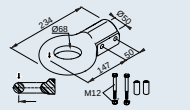		
Drawbar eyes **NATO N76/E** Part no. 1 224 111	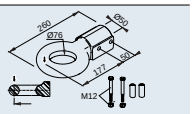		

Refer to chapter 5 for drawbar eye illustrations and descriptions

IMPORTANT!

The hitch components and drawbar eyes have multiple uses. With this unbraked drawbar, the spacer sleeves included in the scope of delivery can be disregarded during assembly.

SURFACE TREATMENT

- Hot-dip galvanised
- Hitches, eyes and small parts galvanised

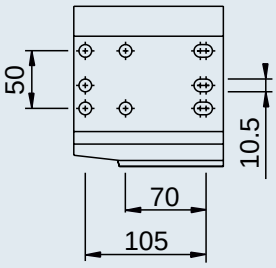

Jockey wheel flange

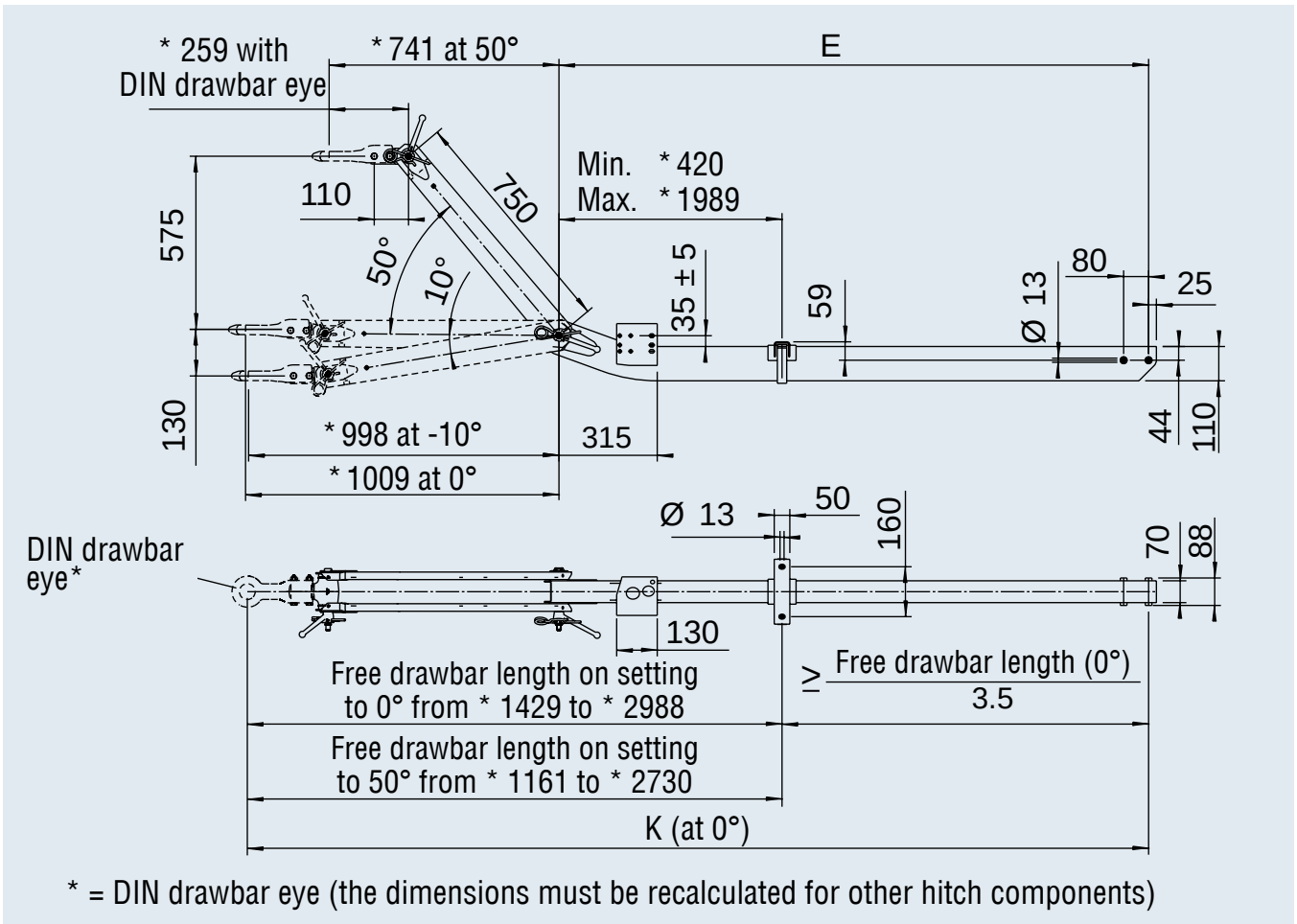

* = DIN drawbar eye (the dimensions must be recalculated for other hitch components)

TOWBAR CONNECTION TOOTHED WASHER 75 VU

Height-adjustable with drawbar section up to 750 kg

TECHNOLOGY

Drawbar type 75 VU vers. A 1

Intermediate piece with drawbar section

Permitted nose load 100 kg

ECE type approval no.:
E1 55R-01 0266

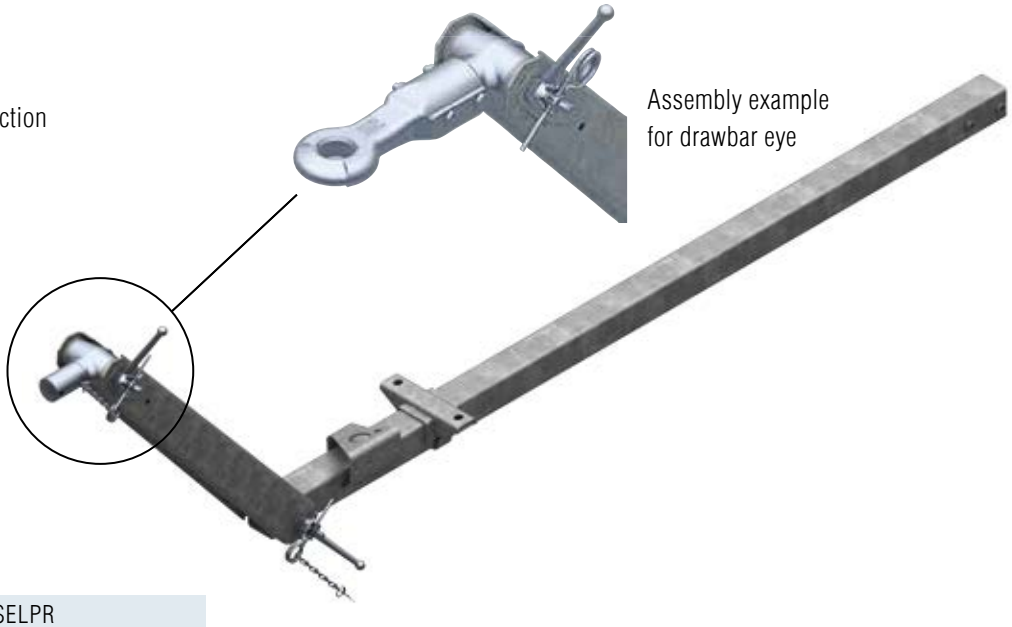

Assembly example for drawbar eye

SAP: ZUGV ZSHB 75VU M DEICHSELPR

Drawbar cpl. with drawbar section mounted (without hitch components)

Part no.	Drawbar length E in mm	Total length K (at 0°) mm with DIN drawbar eye D40				
200 575 01	920	1,929	19.9	9	–	10
200 575 02	1,000	2,009	20.6	9	–	10
200 575 03	1,080	2,089	21.3	9	–	10
200 575 04	1,160	2,169	22	9	–	10
200 575 05	1,240	2,249	22.6	9	–	10
200 575 06	1,320	2,329	23.3	9	–	10
200 575 07	1,400	2,409	24.0	9	–	10
200 575 08	1,480	2,489	24.7	9	–	10
200 575 09	1,560	2,569	25.4	9	–	10
200 575 10	1,640	2,649	26.1	9	–	10
200 575 11	1,720	2,729	26.7	9	–	10
200 575 12	1,800	2,809	27.4	9	–	10
200 575 13	1,880	2,889	28.1	9	–	10
200 575 14	1,960	2,969	28.8	9	–	10
200 575 15	2,040	3,049	29.5	9	–	10
200 575 16	2,120	3,129	30.1	9	–	10
200 575 17	2,200	3,209	30.8	9	–	10
200 575 18	2,280	3,289	31.5	9	–	10
200 575 19	2,360	3,369	32.2	9	–	10
200 575 20	2,440	3,449	32.9	9	–	10
200 575 21	2,520	3,529	33.6	9	–	10
200 575 22	2,600	3,609	34.2	9	–	10
200 575 23	2,680	3,689	34.9	9	–	10
200 575 24	2,760	3,769	35.6	9	–	10
200 575 25	2,840	3,849	36.3	9	–	10

Drawbar cpl. with drawbar section mounted (without hitch components), special variant with parking brake mounted

200 575 26	1,960	2,969	30.8	9	–	10

Push-on hitch components: Drawbar eye connection D50 / 75 VU

Hitch **AK 161 - Ø 50** Part no. 1 730 808	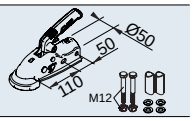	**Drawbar eyes** **England E30/A** Part no. 1 224 106	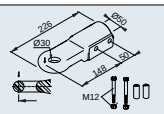
Drawbar eyes **DIN D40/F** Part no. 1 213 350	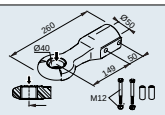	**Drawbar eyes** **England E40/A** Part no. 1 224 107	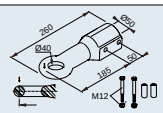
Drawbar eyes **Italy I45/F** Part no. 1 224 108	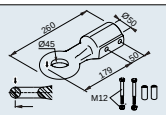	**Drawbar eyes** **DIN D50** Part no. 1 730 612	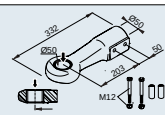
Drawbar eyes **England E50/A** Part no. 1 224 109	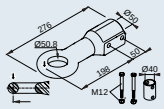	**Drawbar eyes** **Sweden VBG 57.5** Part no. 1 225 076	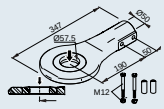
Drawbar eyes **France F68/E** Part no. 1 224 110	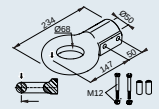		
Drawbar eyes **NATO N76/E** Part no. 1 224 111	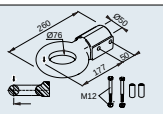		

Refer to chapter 5 for drawbar eye illustrations and descriptions

IMPORTANT!

The hitch components and drawbar eyes have multiple uses. With this unbraked drawbar, the spacer sleeves included in the scope of delivery can be disregarded during assembly.

SURFACE TREATMENT

- Hot-dip galvanised
- Hitches, eyes and small parts galvanised

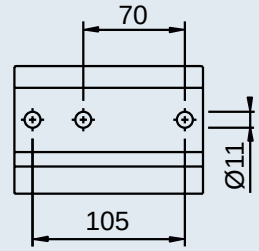

Jockey wheel flange

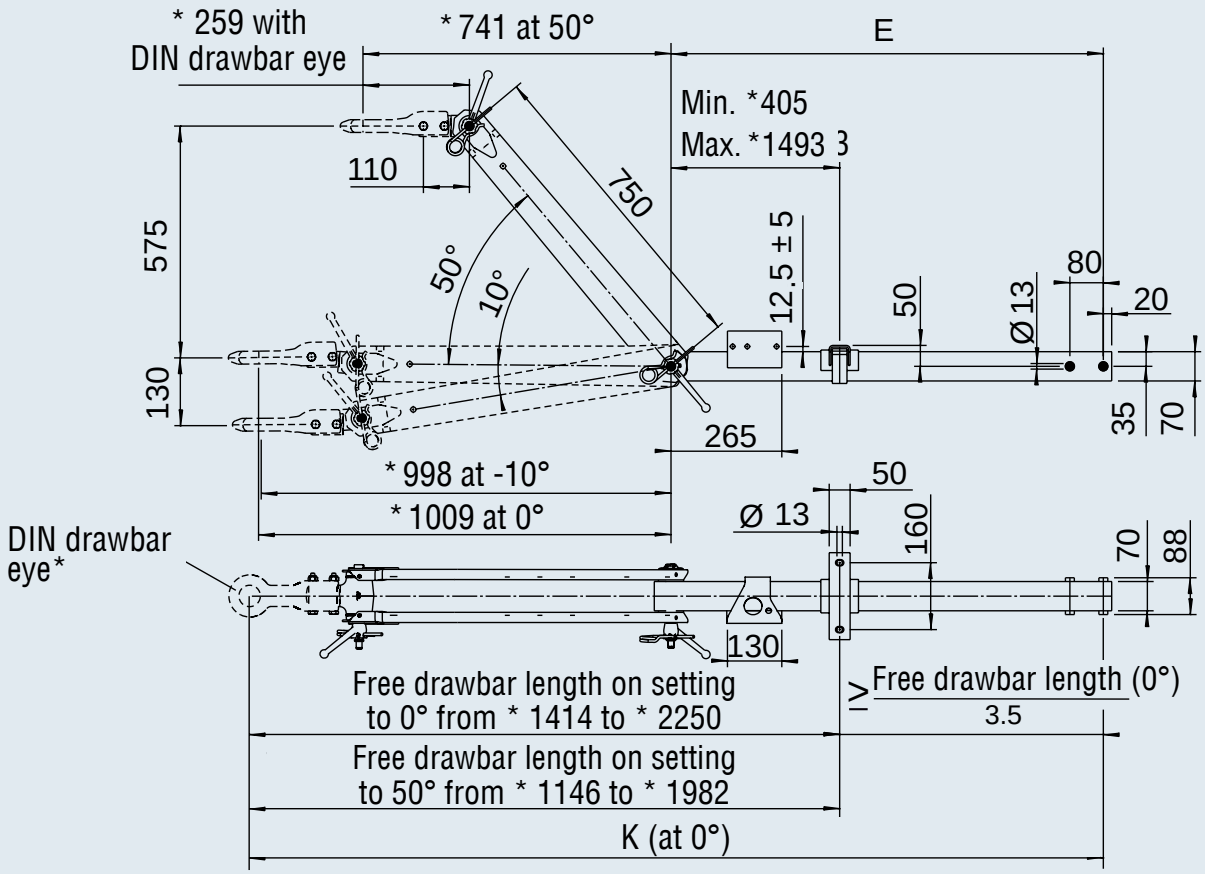

* = DIN drawbar eye (the dimensions must be recalculated for other hitch components)

TOWBAR CONNECTION TOOTHED WASHER 102 VB

Height-adjustable with drawbar section up to 1,100 kg

TECHNOLOGY

Drawbar type 102 VB vers. N

Intermediate piece with drawbar section
Permitted nose load 100 kg

ECE type approval no.:
E1 55R-01 0211

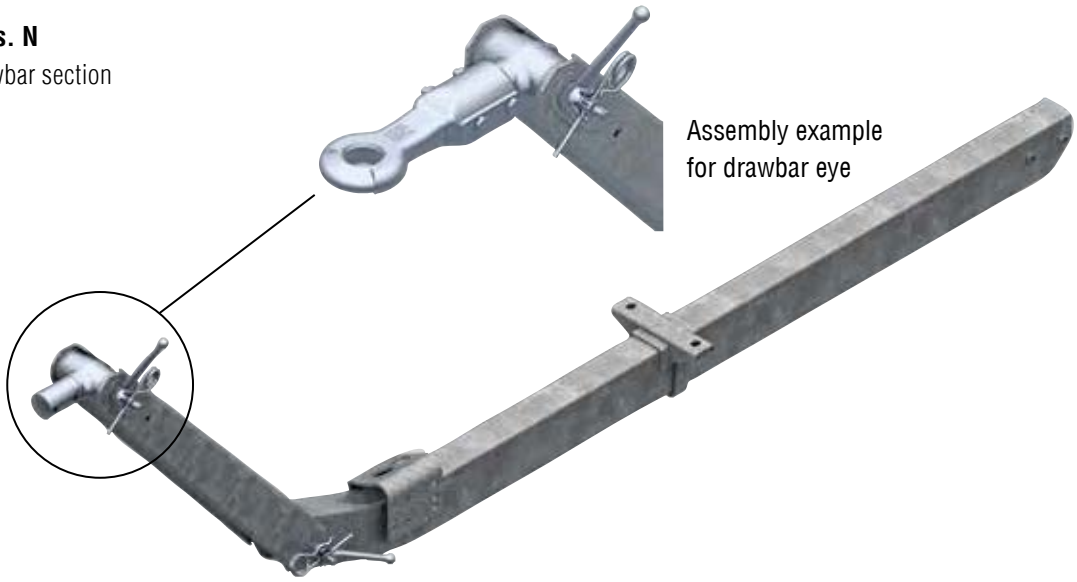

Assembly example
for drawbar eye

SAP: ZUGV ZSHB 102VB M DEICHSELPR

Drawbar cpl. with drawbar section mounted (without hitch components)

Part no.	Drawbar length E in mm	Total length K (at 0°) mm with DIN drawbar eye D40				
200 576 01	1,010	2,019	34.8	9	–	10
200 576 02	1,090	2,099	35.6	9	–	10
200 576 03	1,170	2,179	36.4	9	–	10
200 576 04	1,250	2,259	37.2	9	–	10
200 576 05	1,330	2,339	38.1	9	–	10
200 576 06	1,410	2,419	38.9	9	–	10
200 576 07	1,490	2,499	39.7	9	–	10
200 576 08	1,570	2,579	40.5	9	–	10
200 576 09	1,650	2,659	41.3	9	–	10
200 576 10	1,730	2,739	42.1	9	–	10
200 576 11	1,810	2,819	42.9	9	–	10
200 576 12	1,890	2,899	43.7	9	–	10
200 576 13	1,970	2,979	44.5	9	–	10
200 576 14	2,050	3,059	45.3	9	–	10
200 576 15	2,130	3,139	46.1	9	–	10
200 576 16	2,210	3,219	46.9	9	–	10
200 576 17	2,290	3,299	47.7	9	–	10
200 576 18	2,370	3,379	48.5	9	–	10
200 576 19	2,450	3,459	49.3	9	–	10
200 576 20	2,530	3,539	50.2	9	–	10
200 576 21	2,610	3,619	51	9	–	10
200 576 22	2,690	3,699	51.8	9	–	10
200 576 23	2,770	3,779	52.6	9	–	10
200 576 24	2,850	3,859	53.4	9	–	10

Drawbar cpl. with drawbar section mounted (without hitch components), special variant with parking brake mounted

200 576 26	1,970	2,979	46.5	9	–	10

Push-on hitch components: Drawbar eye connection D50 / 102 VB

Hitch **AK 161 - Ø 50** Part no. 1 730 808	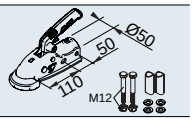	**Drawbar eye** **England E30/A** Part no. 1 224 106	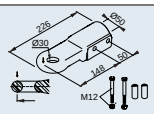
Drawbar eyes **DIN D40/F** Part no. 1 213 350	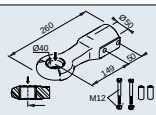	**Drawbar eyes** **England E40/A** Part no. 1 224 107	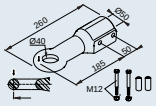
Drawbar eye **Italy I45/F** Part no. 1 224 108	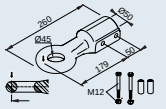	**Drawbar eyes** **DIN D50** Part no. 1 730 612	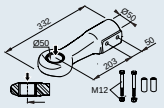
Drawbar eyes **England E50/A** Part no. 1 224 109	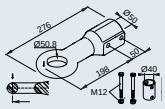	**Drawbar eyes** **Sweden VBG 57.5** Part no. 1 225 076	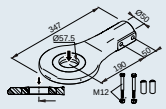
Drawbar eyes **France F68/E** Part no. 1 224 110	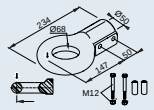	**Drawbar eyes** **NATO N76/E** Part no. 1 224 111	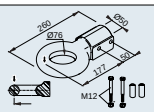

Refer to chapter 5 for drawbar eye illustrations and descriptions

2

IMPORTANT!

1. The hitch components and drawbar eyes have multiple uses.
   In unbraked drawbars, the spacer sleeves supplied can be dispensed with during assembly.
2. In the EC, the maximum permitted gross weight with an unbraked trailer is 750 kg. The respective regulations in countries outside of the EU must be heeded.

SURFACE TREATMENT

- Hot-dip galvanised
- Hitches, eyes and small parts galvanised

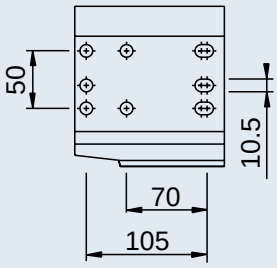

Jockey wheel flange

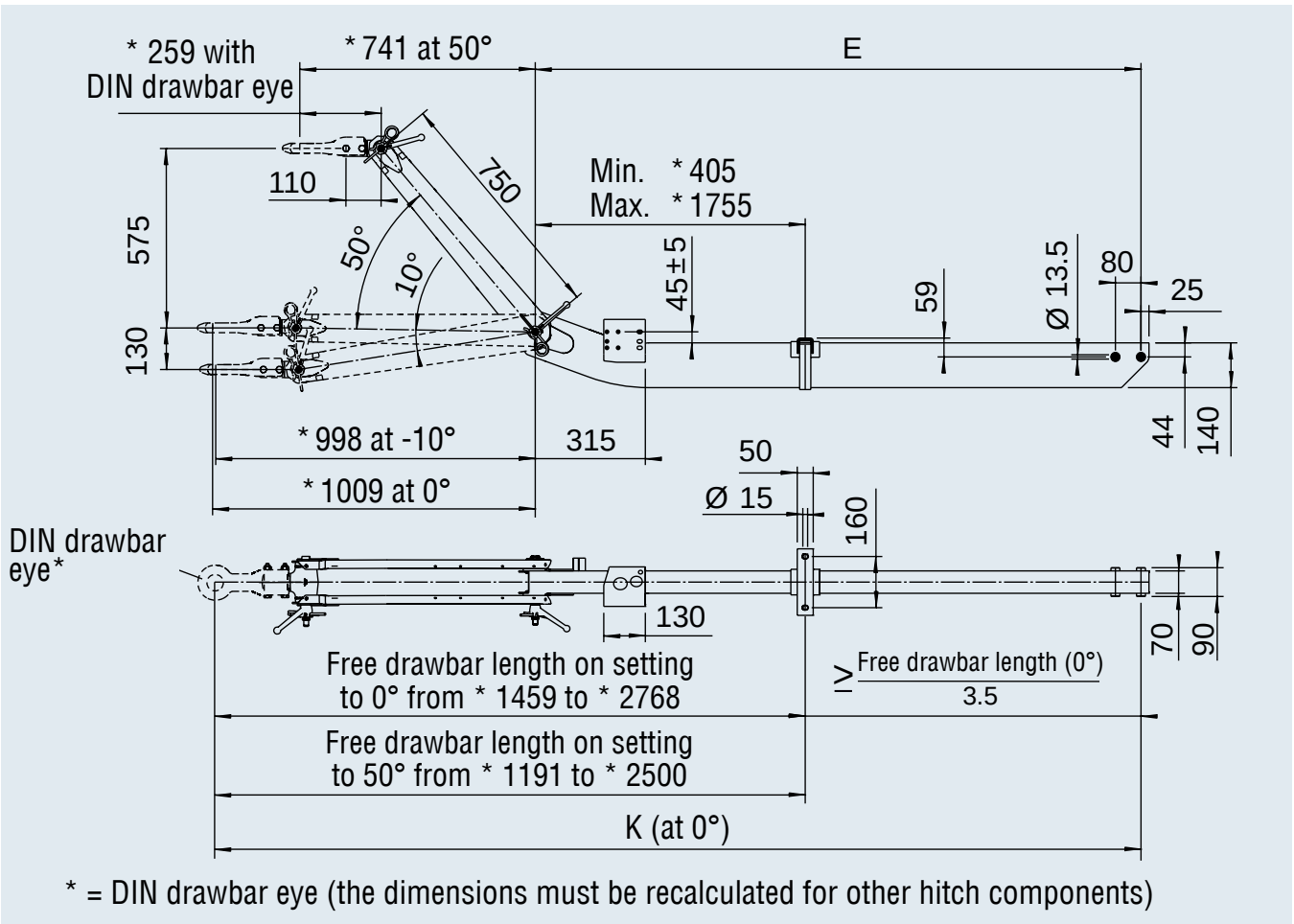

* = DIN drawbar eye (the dimensions must be recalculated for other hitch components)

TOWBAR CONNECTION TOOTHED WASHER 162 VB

Height-adjustable with drawbar section up to 1,600 kg

TECHNOLOGY

Drawbar type 162 VB vers. M

Intermediate piece with drawbar section

Permitted nose load 100 kg

ECE type approval no.:
E1 55R-01 0212

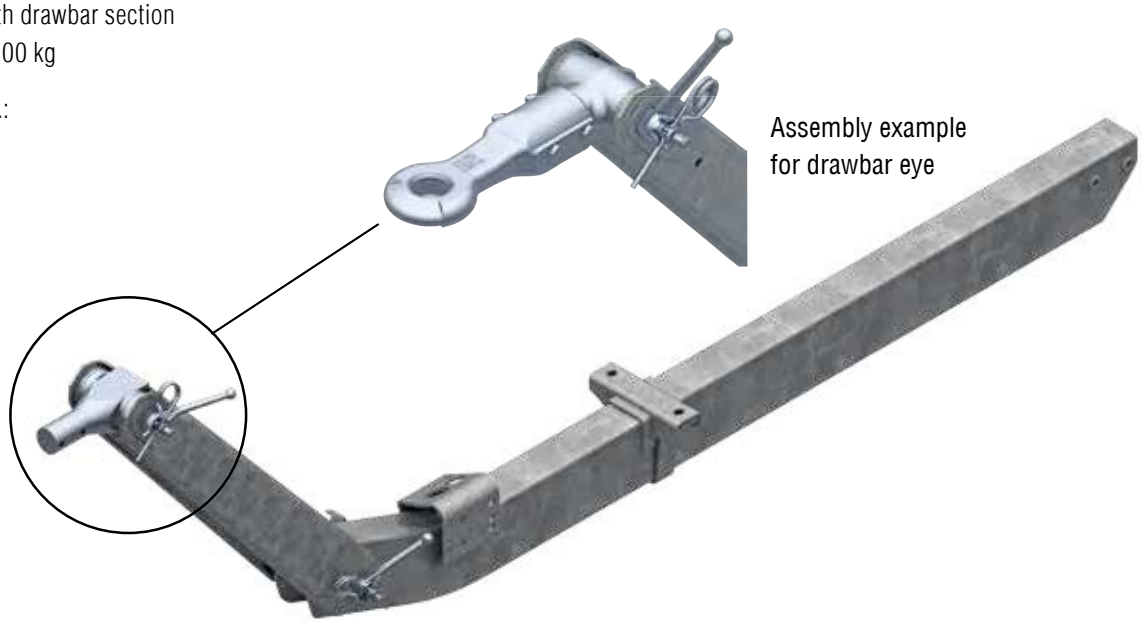

Assembly example for drawbar eye

SAP: ZUGV ZSHB 162VB M DEICHSELPR

Drawbar cpl. with drawbar section mounted (without hitch components)

Part no.	Drawbar length E in mm	Total length K (at 0°) mm with DIN drawbar eye D40				
200 577 01	1,250	2,302	54.1	9	–	10
200 577 02	1,330	2,382	55.2	9	–	10
200 577 03	1,410	2,462	56.3	9	–	10
200 577 04	1,490	2,542	57.4	9	–	10
200 577 05	1,570	2,622	58.6	9	–	10
200 577 06	1,650	2,702	59.7	9	–	10
200 577 07	1,730	2,782	60.8	9	–	10
200 577 08	1,810	2,862	61.9	9	–	10
200 577 09	1,890	2,942	63	9	–	10
200 577 10	1,970	3,022	64.1	9	–	10
200 577 11	2,050	3,102	65.2	9	–	10
200 577 12	2,130	3,182	66.3	9	–	10
200 577 13	2,210	3,262	67.4	9	–	10
200 577 14	2,290	3,342	68.6	9	–	10
200 577 15	2,370	3,422	69.7	9	–	10
200 577 16	2,450	3,502	70.8	9	–	10
200 577 17	2,530	3,582	71.9	9	–	10
200 577 18	2,610	3,662	73	9	–	10
200 577 19	2,690	3,742	74.1	9	–	10
200 577 20	2,770	3,822	75.2	9	–	10
200 577 21	2,850	3,902	76.3	9	–	10

Drawbar cpl. with drawbar section mounted (without hitch components), special variant with parking brake mounted

200 577 22	1,970	3,022	69.1	9	–	10

Push-on hitch components: Drawbar eye connection D50 / 162 VB

Hitch **AK 161 - Ø 50** Part no. 1 730 808	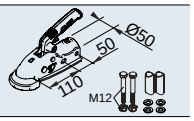
Drawbar eyes **England E30/A** Part no. 1 224 106	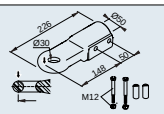
Drawbar eyes **DIN D40/F** Part no. 1 213 350	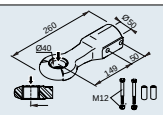
Drawbar eyes **England E40/A** Part no. 1 224 107	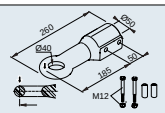
Drawbar eyes **Italy I45/F** Part no. 1 224 108	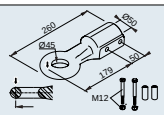
Drawbar eyes **DIN D50** Part no. 1 730 612	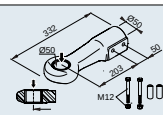
Drawbar eyes **England E50/A** Part no. 1 224 109	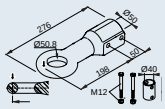
Drawbar eyes **Sweden VBG 57.5** Part no. 1 225 076	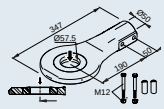
Drawbar eyes **France F68/E** Part no. 1 224 110	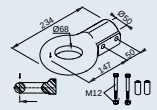
Drawbar eyes **NATO N76/E** Part no. 1 224 111	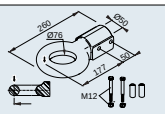

Refer to chapter 5 for drawbar eye illustrations and descriptions

IMPORTANT!

1. The hitch components and drawbar eyes have multiple uses.
   With the unbraked drawbar, the spacer sleeves included in the scope of delivery can be disregarded during assembly.
2. In the EC, the maximum permitted gross weight with an unbraked trailer is 750 kg. The respective regulations in countries outside of the EU must be heeded.

SURFACE TREATMENT

- Hot-dip galvanised
- Hitches, eyes and small parts galvanised

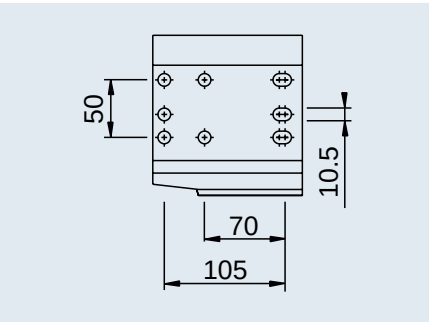

Jockey wheel flange

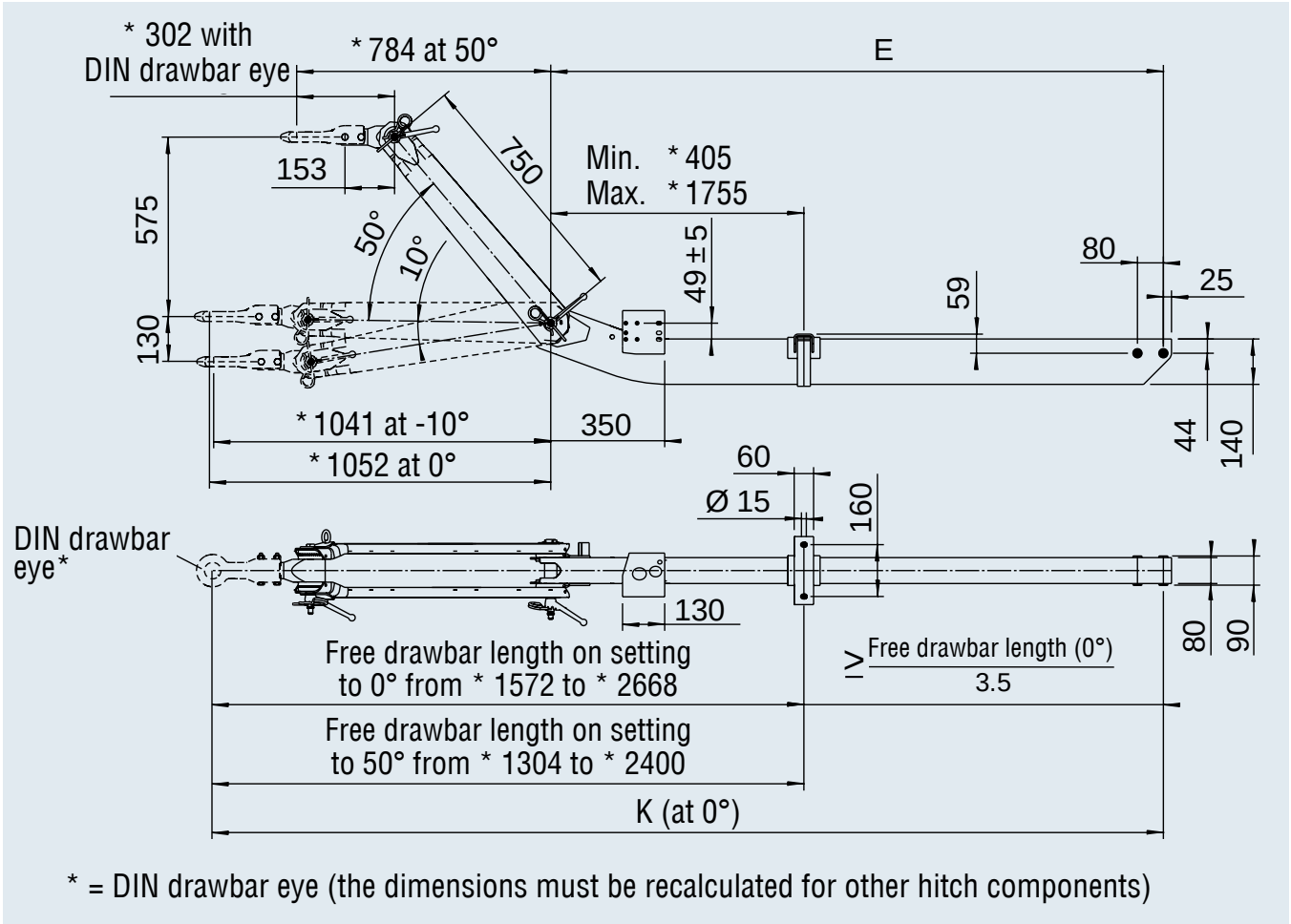

* = DIN drawbar eye (the dimensions must be recalculated for other hitch components)

HEIGHT-ADJUSTABLE DRAWBAR, TYPE 353 VB

for trailers with pneumatic brakes 3,500 kg

TECHNOLOGY

Drawbar type 353 VB vers. G

Intermediate piece with drawbar section

Permitted nose load 150 kg

ECE type approval no.:
E1 55R-01 0239

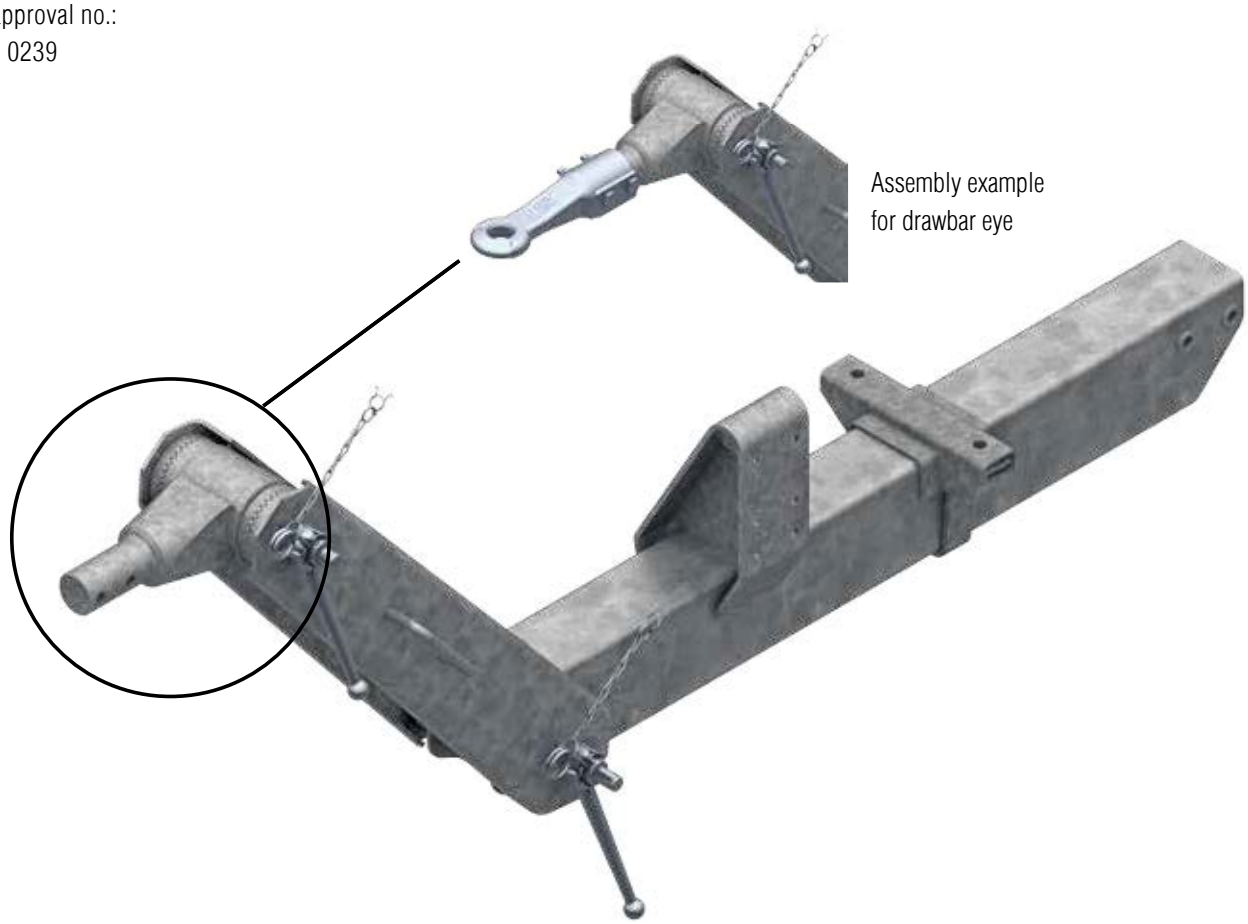

Assembly example
for drawbar eye

SURFACE TREATMENT

- Hot-dip galvanised
- Hitches, eyes and small parts galvanised

SAP: ZUGDEICHS KPL 353VB

Drawbar cpl. with drawbar section mounted (without hitch components)

Part no.	Drawbar length E in mm	Total length K (at 0°) mm with DIN drawbar eye D40				
200 615 41	1,970	3,190	151	10	–	10
200 615 42	2,130	3,350	155	10	–	10
200 615 43	2,290	3,510	159	10	–	10
200 615 44	2,450	3,670	163	10	–	10
200 615 45	2,610	3,830	167	10	–	10

Push-on hitch components: Drawbar eye connection D60 / 353 VB

Hitch AKS™ 3504 Part no. 1 225 761 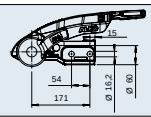	**Ball hitch AK 351 – Ø 50** Part no. 1 224 391 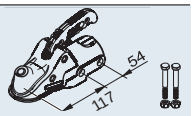	**Drawbar eyes England E30/B** Part no. 1 224 112 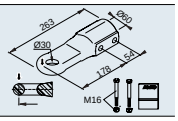
Drawbar eyes England E40/B Part no. 1 224 113 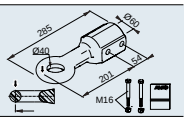	**Drawbar eyes DIN D40/G** Part no. 1 224 114 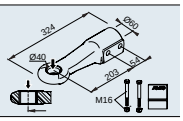	**Drawbar eyes DIN D50** Part no. 1 730 613 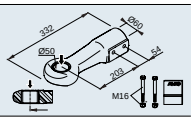
Drawbar eyes Italy I45/G Part no. 1 224 115 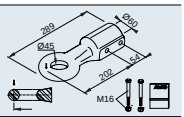	**Drawbar eyes England E50/B** Part no. 1 224 116 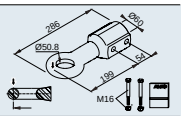	**Drawbar eyes Sweden VBG 57.5** Part no. 1 225 077 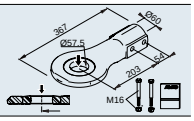
Drawbar eyes France F68/F Part no. 1 224 117 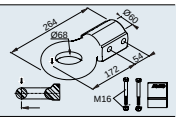	**Drawbar eyes NATO N76/F** Part no. 1 224 118 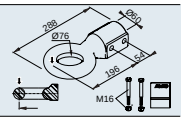	

Refer to chapter 6 for drawbar eye illustrations and descriptions

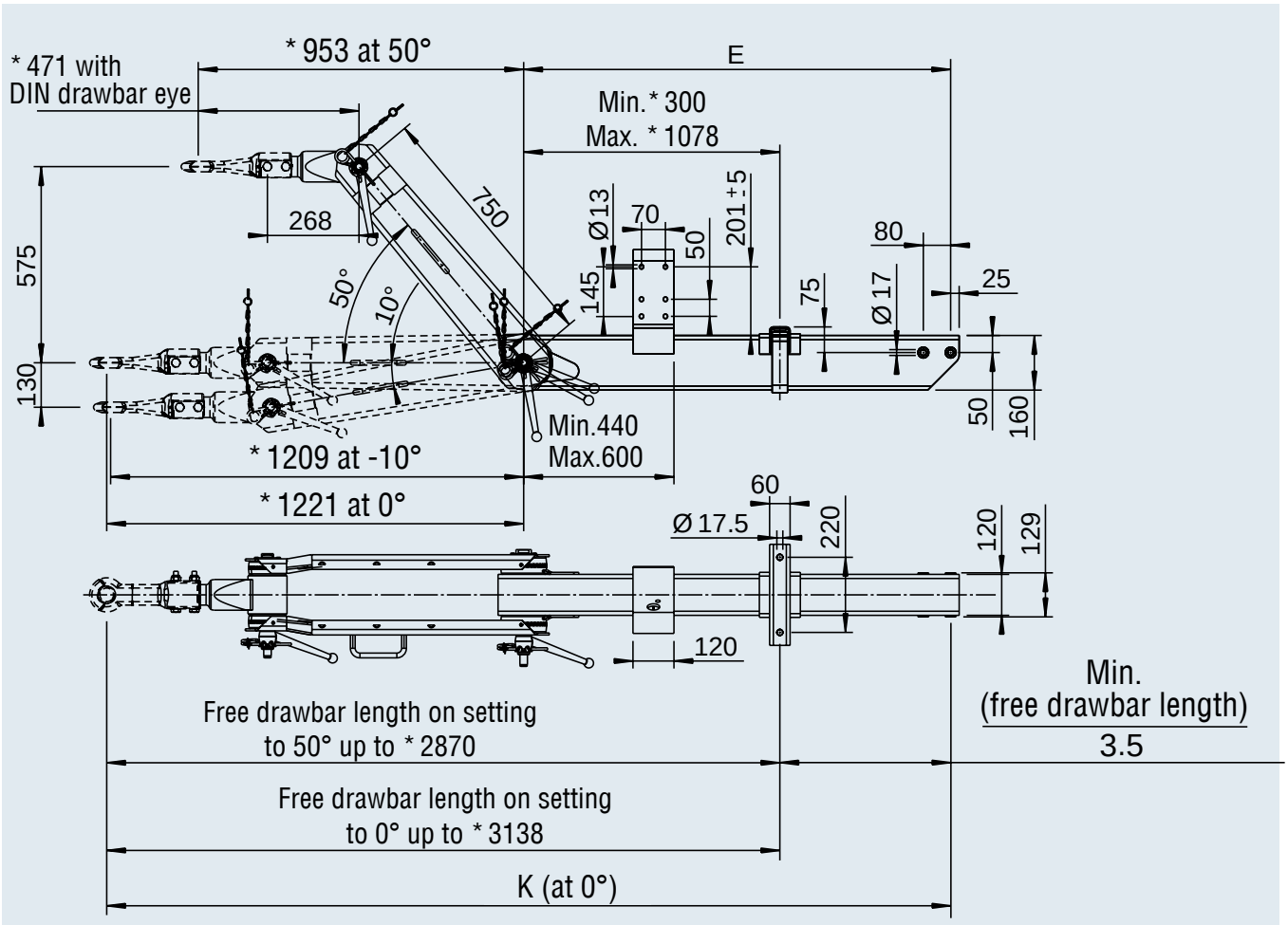

* = DIN drawbar eye (the dimensions must be recalculated for other hitch components)

HEIGHT-ADJUSTABLE DRAWBAR, TYPE 501 VB

for trailers with pneumatic brakes 5,000 kg

TECHNOLOGY

Drawbar type 501 VB vers. A

Intermediate piece with drawbar section

Permitted nose load 500 kg

ECE type approval no.:
E1 55R-01 0883

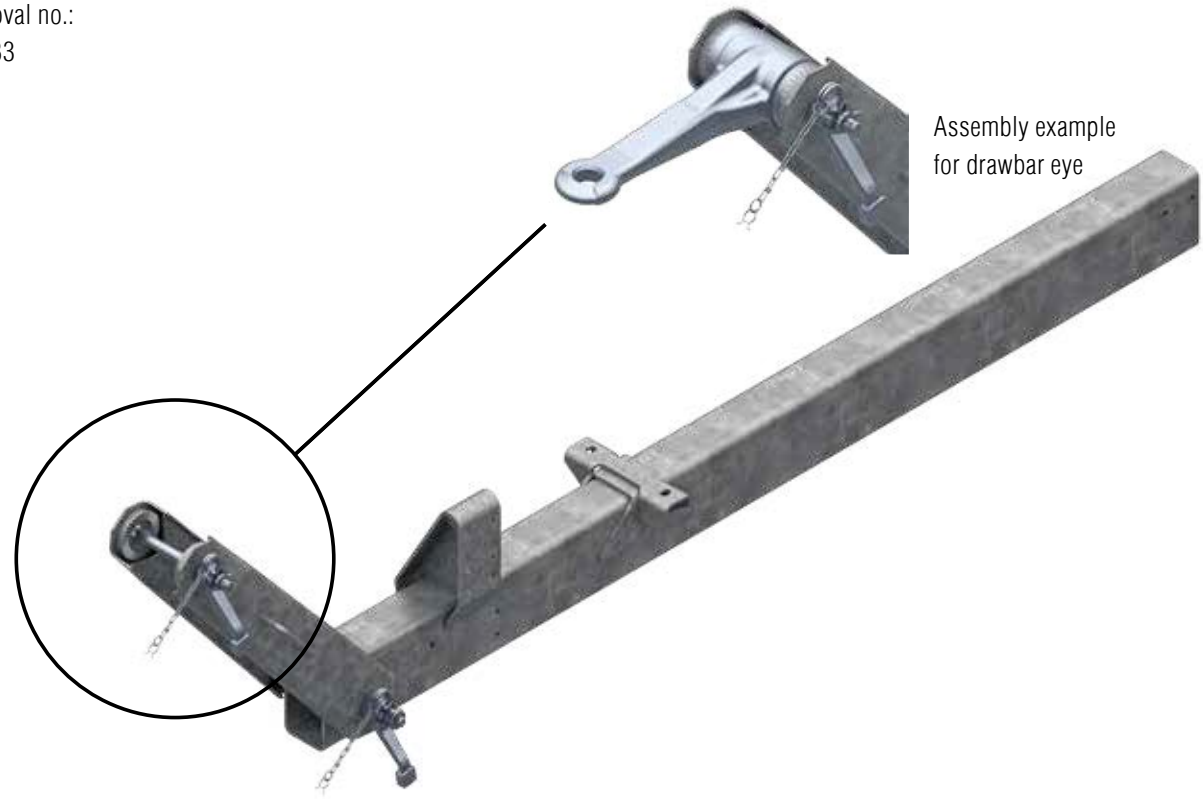

Assembly example
for drawbar eye

SURFACE TREATMENT

- Hot-dip galvanised
- Hitches, eyes and small parts galvanised

SAP: ZUGDEICHS KPL 501VB

Drawbar cpl. with drawbar section mounted (without hitch components)

Part no.	Drawbar length E in mm	Total length K (at 0°) mm with DIN drawbar eye D40				
200 615 21	1,970	3,100	155	10	–	10
200 615 22	2,130	3,260	162	10	–	10
200 615 23	2,290	3,420	169	10	–	10
200 615 24	2,450	3,580	176	10	–	10
200 615 25	2,610	3,740	183	10	–	10

Hitch components: Drawbar eye connection D60 / 501 VB

Drawbar eye DIN Ø 40
Part no. 1 335 412



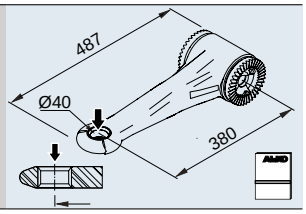

Drawbar eye DIN Ø 50
Part no. 1 213 569



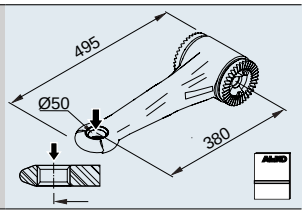

Drawbar eye NATO Ø 76
Part no. 1 360 185



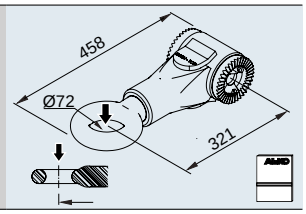

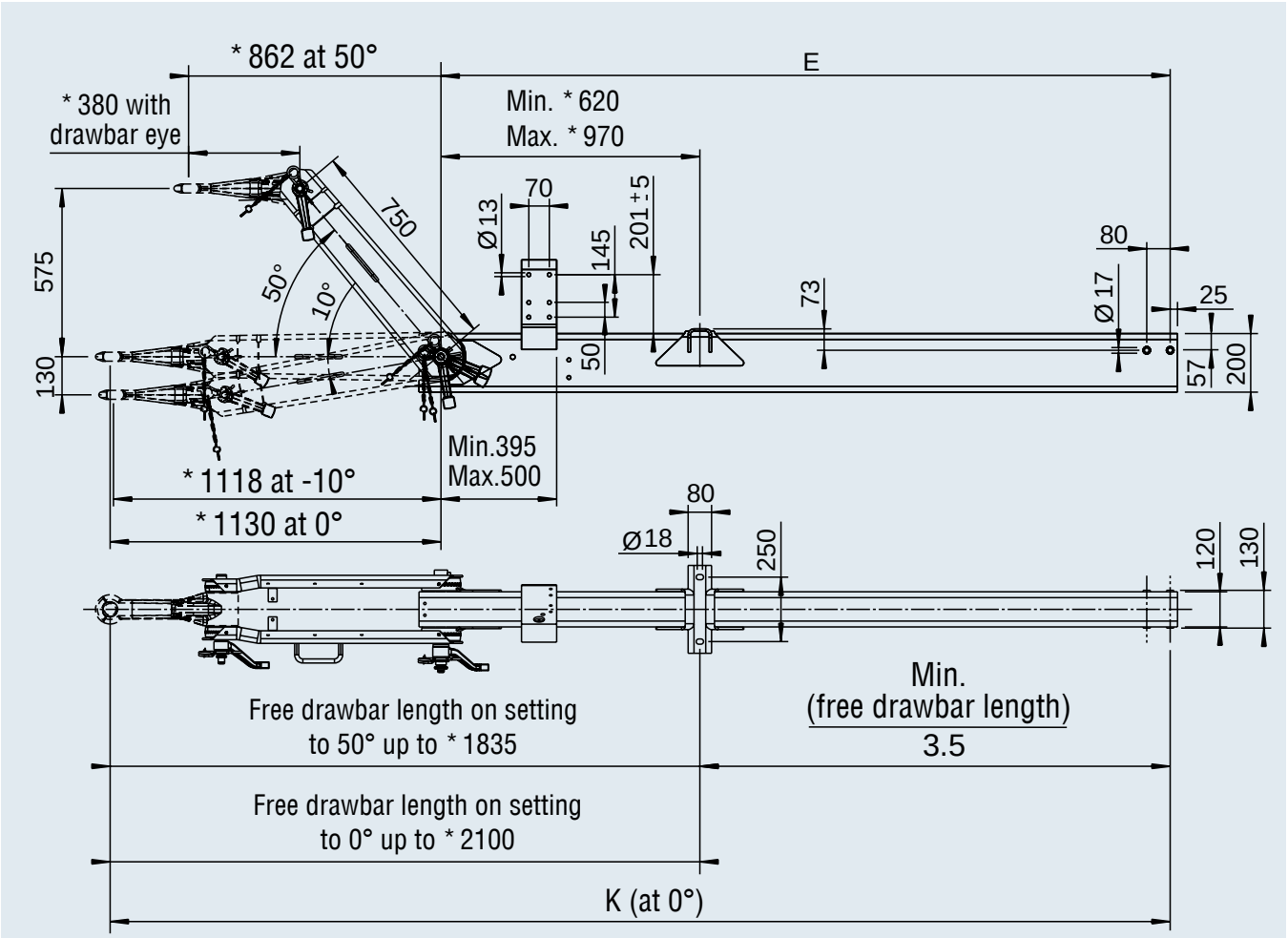

* = DIN drawbar eye (the dimensions must be recalculated for other hitch components)

HEIGHT-ADJUSTABLE DRAWBAR, TYPE 751 VB

for trailers with pneumatic brakes 6,500 kg

TECHNOLOGY

Drawbar type 751 VB vers. A1

Intermediate piece with drawbar section

Permitted nose load 650 kg

ECE type approval no.:
E1 55R-01 0259

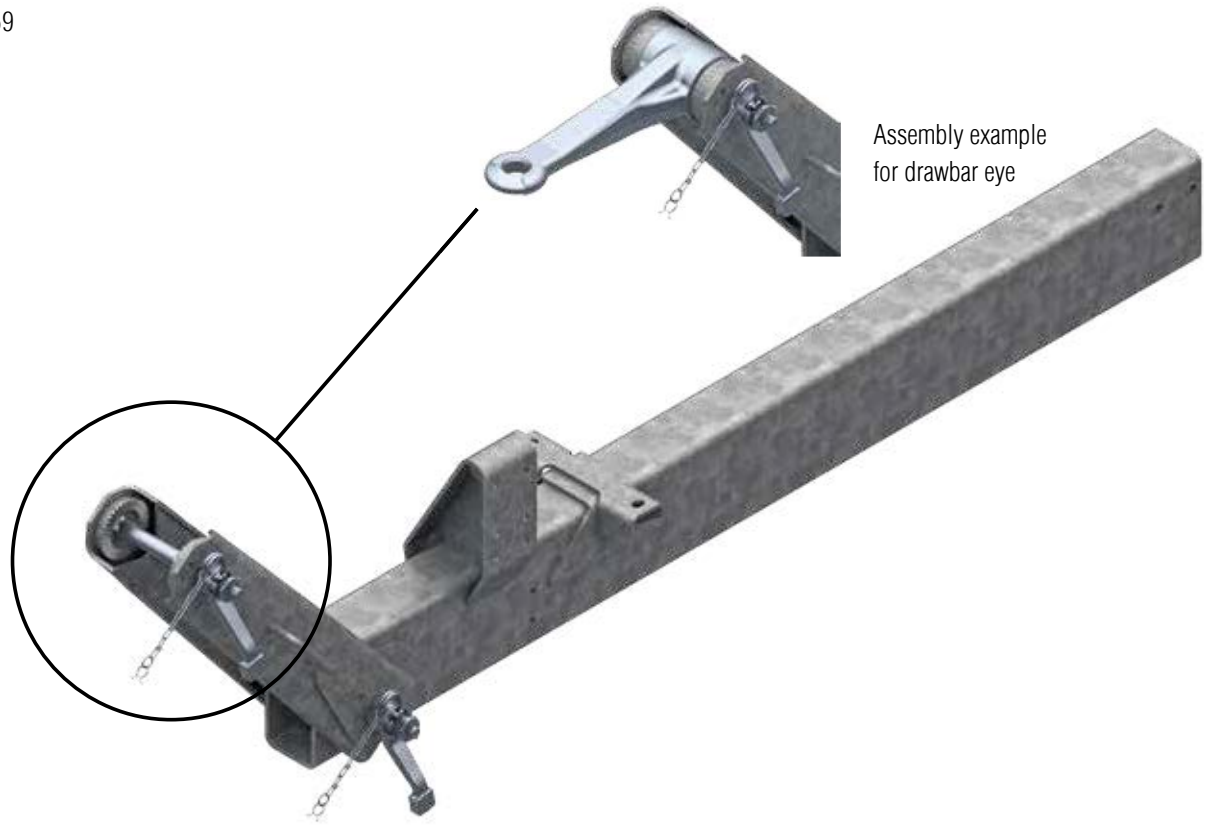

Assembly example
for drawbar eye

SURFACE TREATMENT

- Hot-dip galvanised
- Hitches, eyes and small parts galvanised

SAP: ZUGDEICHS KPL 751VB

Drawbar cpl. with drawbar section mounted (without hitch components)

Part no.	Drawbar length E in mm	Total length K (at 0°) mm with DIN drawbar eye D40				
200 615 01	1,970	2,950	180	10	–	10
200 615 02	2,130	3,110	190	10	–	10
200 615 03	2,290	3,270	200	10	–	10
200 615 04	2,450	3,430	210	10	–	10
200 615 05	2,610	3,590	220	10	–	10

Hitch components: Drawbar eye connection D60 / 751 VB

Drawbar eye DIN Ø 40
Part no. 1 335 412



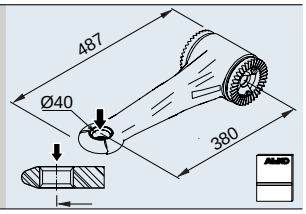

Drawbar eye DIN Ø 50
Part no. 1 213 569



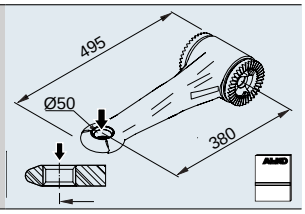

Drawbar eye NATO Ø 76
Part no. 1 360 185



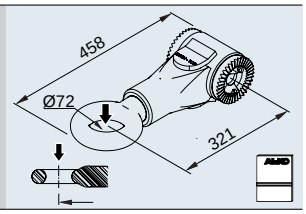

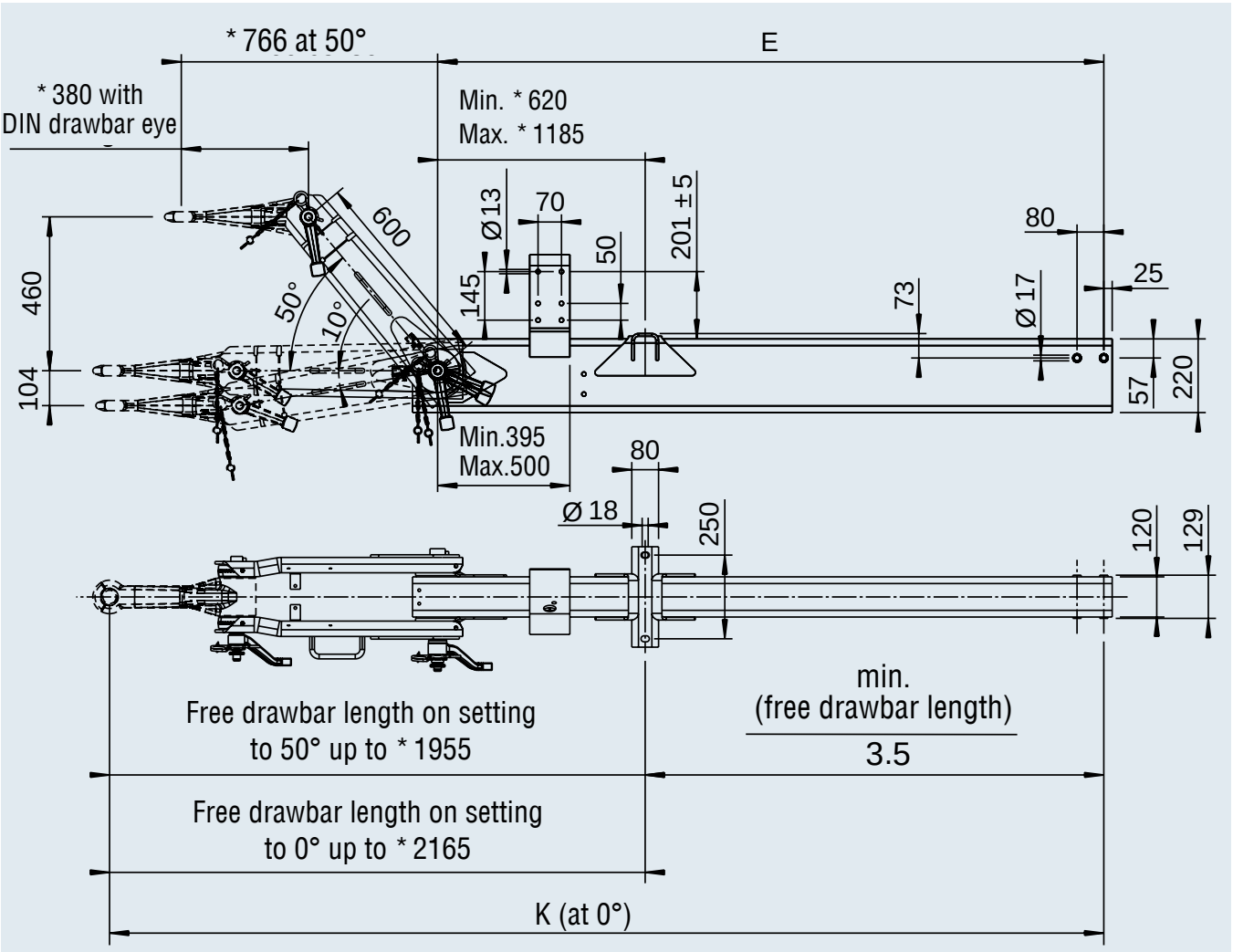

* = DIN drawbar eye (the dimensions must be recalculated for other hitch components)

DRAWBAR INSTALLATION V PROFI 3500

for trailers with pneumatic brakes

SAP: ZE KPL V DREHBAR PROFI 3500
SAP: ZE KPL V STARR PROFI 3500

Drawbar installation V PROFI 3,500 kg without hitch

Part no.	Type	Gross weight in kg	Nose load in kg	Installation	Drawbar tube rotating	Hitch mounted				
1 730 936	ZE 3500	0 – 3,500	350	top + bottom	yes (360°)	without	19	–	15	30
1 730 996	ZE 3500	0 – 3,500	350	top + bottom	No	without	20	–	15	30

SCOPE OF DELIVERY

- Drawbar installation (see illustration)
- Plug holder (loose)
- Installation guidelines art. no. (not included in scope of delivery)

ECE type approval no.

Drawbar installation: E1 55R-01 1649

ACCESSORIES

(please order separately!)
Refer to table of contents for hitch components Clamp Ø 48 / Ø 60 mm art. no. 1 224 196. Centre flange cannot be attached!



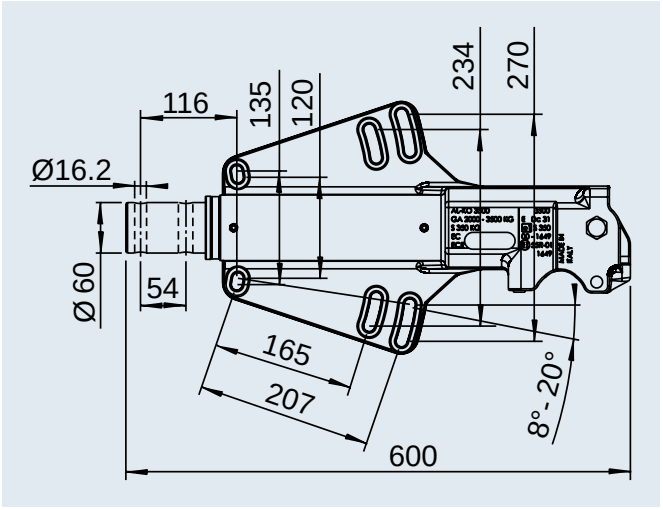

ACCESSORIES



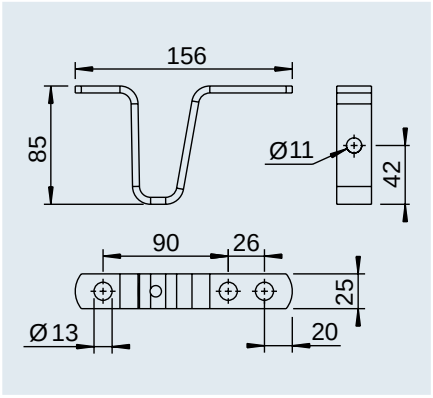

Skid bracket for unbraked tubular drawbars	
SAP: ABSTUETZBUEGEL ROHR UNGEB	
Part no.	203 037
	0.28 kg
	– 200 units
	2



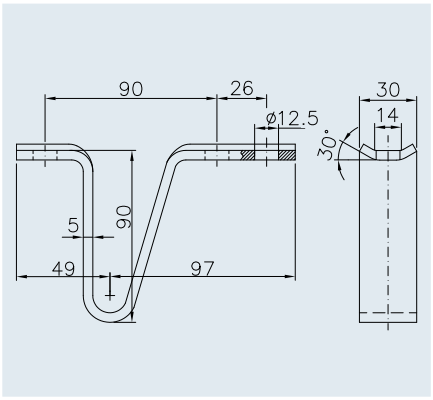

WINTERHOFF
QUALITY TRAILER SYSTEMS

Skid bracket for unbraked tubular drawbars	
SAP: ABSTÜTZBÜGEL FLA	
Part no.	1 860 680 *(W 1562)*
	0.30 kg
	50 units –
	12

3. OVERRUN DEVICES

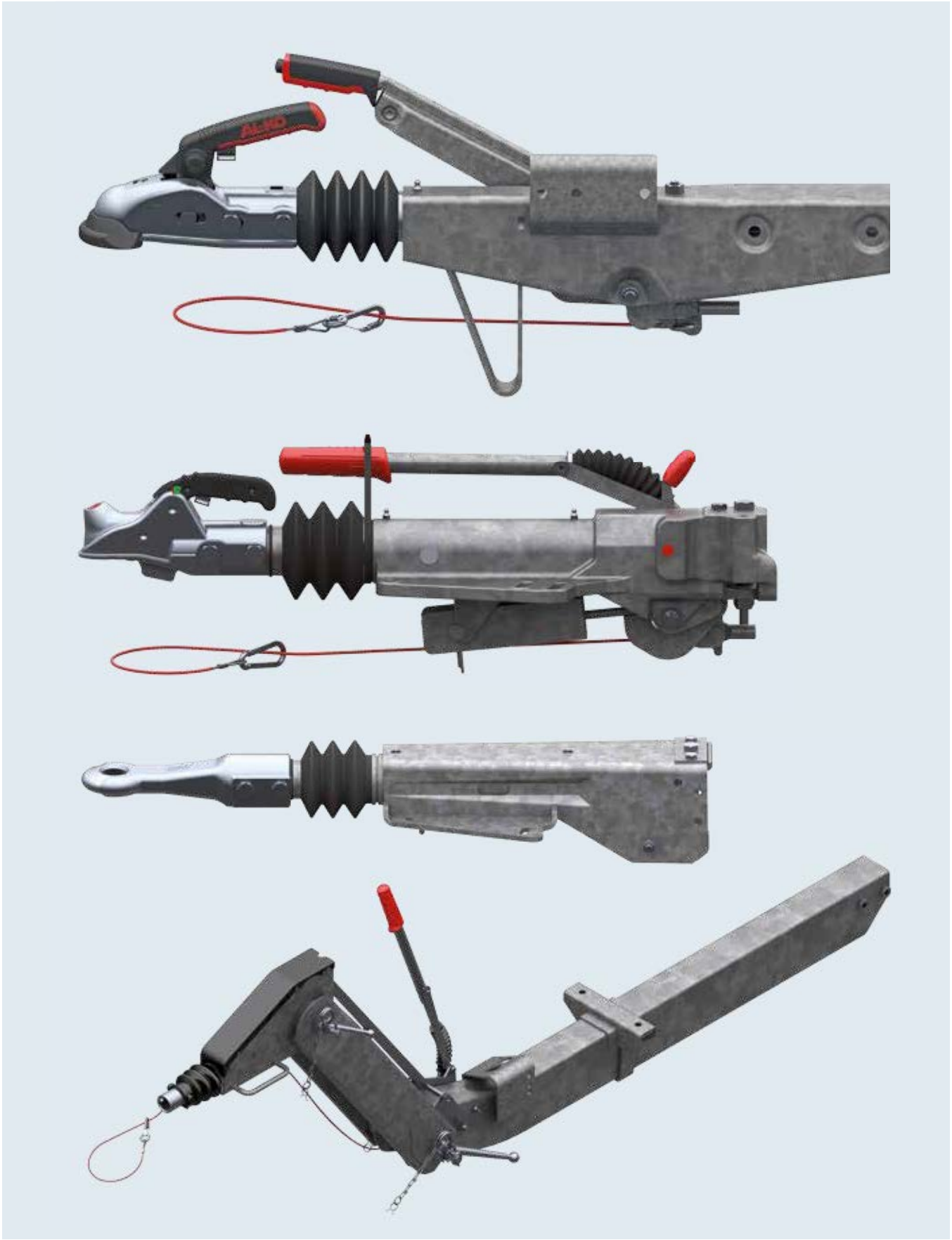

OVERRUN DEVICES

Overrun devices – AL-KO brake system	48 – 49
Overrun devices square	50 – 51
Overrun device square, without drawbar section	52 – 58
Overrun device square, with drawbar section	59 – 70
Overrun device square, with drawbar section, sideways swivelling	71 – 75
Overrun device square, with drawbar section, removable	76 – 78
Overrun device square, diagrams and accessories	79 – 81
Overrun devices V	82 – 83
Overrun device V BASIC	84 – 93
Overrun device V accessories	94 – 99
Overrun device V PROFI	100 – 103
Overrun device V PROFI accessories	104 – 106
Overrun devices V special	108
Overrun device V / square with lowering handbrake lever	108 – 111
Overrun device V / square with hydr. brake transmission device	112 – 115
Overrun device V up to 6,000 kg, 40 km/h	116 – 117
Towbar connections, jockey wheel crossmember, brake rod	118 – 123
Height-adjustable overrun devices	124 – 125
Height-adjustable overrun device PROFI	126 – 133
Height-adjustable overrun device BASIC	134 – 141
Height-adjustable overrun device COMPACT	142 – 145

OVERRUN DEVICES

AL-KO brake system

TECHNOLOGY

1. Pull bar (pushing force)
2. Reversal
3. Tensile force
4. Wheel brake

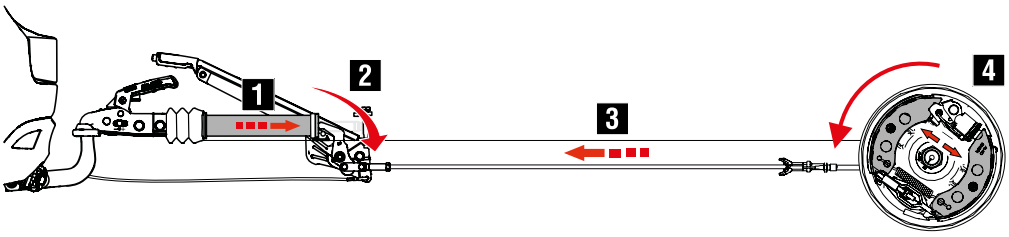

Function of the overrun device
The overrun device can be designated as the control unit of the overrun brake system. Braking the towing vehicle generates a drawbar force at the coupling point. Once the response threshold has been exceeded, the pull bar is pushed in and the relay lever is actuated at the same time; this means the wheel brake is clamped by means of the transmission device.

Record values that go way beyond the legally prescribed limits.





Handbrake forwards
Regulation: The brake value must be greater than 18% (of the permitted gross weight).
AL-KO achieves up to 30%.





Breakaway brake (emergency brake)
Regulation: The brake value must be greater than 18% (of the permitted gross weight).
AL-KO achieves up to 20%.





Handbrake backwards
Regulation: The brake value must be greater than 18% (of the permitted gross weight).
AL-KO achieves up to 60%.





Backwards roll stop by the integrated servo stop in the wheel brake.
The handbrake lever is automatically clamped further with the trailer on an up-slope, thereby compensating for an incompletely applied handbrake.





Automatic reverse with minimum residual braking force. The maximum permitted residual braking force backwards is 8% (of the permitted gross weight).
The AL-KO brake system has a minimum residual braking force of approx. 1%.

AL-KO brake systems for trailers – the comparison reveals the difference!

Test unbraked

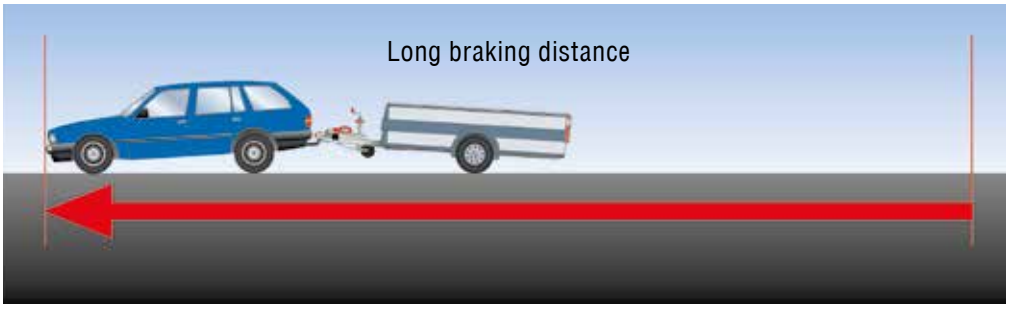



What does unbraked mean?

The trailer does not have its own brakes, i.e. the necessary braking effort for the trailer must be provided by the towing vehicle in full.

The test vehicle combination with an unbraked trailer loses traction during emergency braking on a corner, skids and cannot be controlled.

Test braked

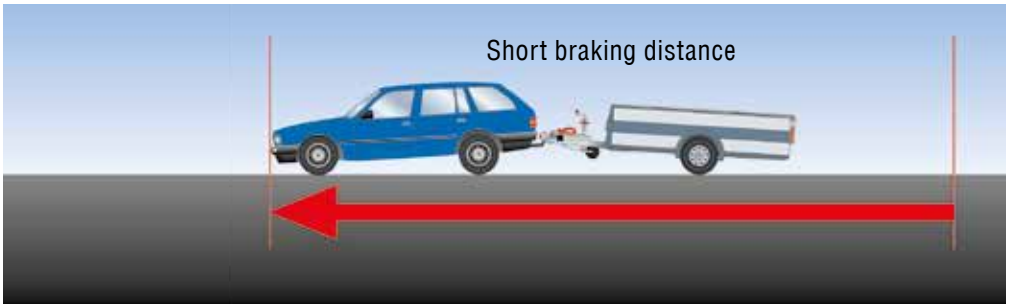



The test vehicle combination with a braked trailer remains **precisely in the track on a bend, even during emergency braking.**

Vehicle combination unbraked	Vehicle combination braked	Result
Braking distance		
53.50 m	**45.50 m**	The test vehicle combination with a braked trailer would thus have a braked distance shorter by **approx. 8 m (17 %) at 90 km/h!**
Braking deceleration		
6.46 m/s²	**8.52 m/s²**	The test vehicle combination with a braked trailer decelerates more, i.e. it comes to a halt **approx. 25 % sooner!**

These braking values are achieved with completely run-in linings with a 100% contact area.

CONCLUSION

Safety for everyone using public roads has to take top priority. No compromises are allowed here. Consequently, AL-KO recommends **braked** trailers.

OVERRUN DEVICES V / SQUARE

GENERAL NOTES

Combine AL-KO overrun devices with AL-KO wheel brakes
AL-KO overrun devices comply with the latest ECE Directives. They may only be combined with the corresponding AL-KO wheel brakes. Please note that the brake system will not function with other combinations.

Excessive nose loads
lead to an increase in plain bearing friction forces. This results in a drop in braking effect. Consequently, please comply with the prescribed nose loads.

Type plates
Type plates must not be rendered illegible by painting or covered by attachments.

Reinforced overrun devices
Reinforced overrun devices, drawbars and hitch components must be installed on trucks, buses or towing vehicles with hard suspension.
Please contact us.

The vehicle manufacturer is responsible for the structure and function of the emergency brake. So that the breakaway cable really functions in an emergency, certain preconditions must be met when building the trailer.

1. The breakaway cable must be cleanly guided with a breakaway cable guide
A defined cable guide must be provided so the breakaway cable can activate the handbrake lever in an emergency.
AL-KO consequently recommends installing a corresponding guide and including a note in the trailer's operating instructions regarding its correct use.

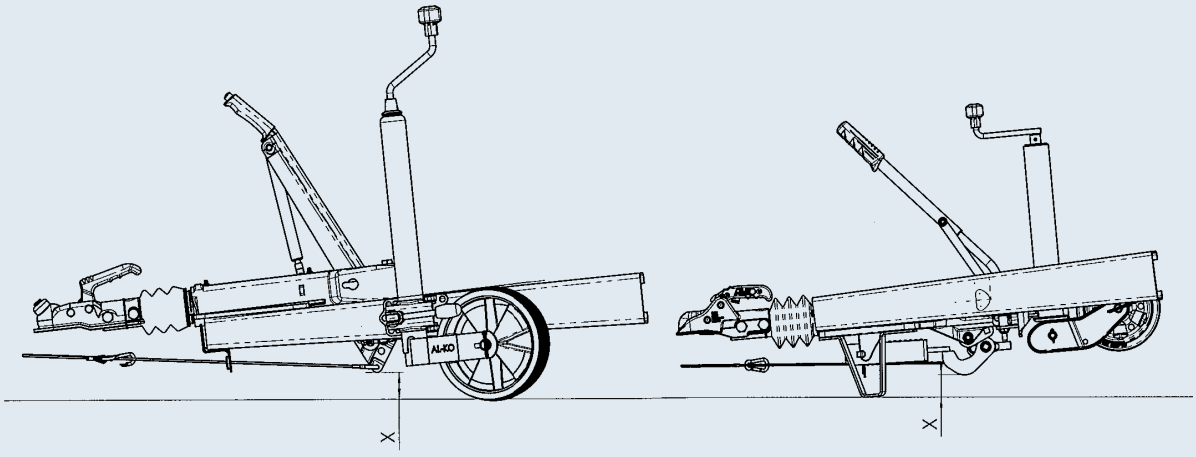

2. The handbrake lever is not allowed to make contact in an emergency
In an emergency, it must be ensured that after the breakaway cable has been used to engage the handbrake lever (handbrake in the closed position), the lever remains accessible. If the handbrake were to make contact with the road surface, the functioning of the emergency brake could no longer be assured. Consequently, corresponding clearances must be observed without fail.
AL-KO recommends a clearance check with fully applied handbrake lever (emergency brake is activated) and, if necessary, the introduction of remedial measures (e.g. installing a skid bracket).

SCOPE OF DELIVERY
See figure on the relevant pages. Incl. plug holder (loose accessory or as a hole in the housing of the overrun device) incl. operating instructions

SURFACE TREATMENT
Hot-dip galvanised housing

CHANGE-OVER RELAY LEVER

With certain overrun devices, the relay lever can be adapted to the corresponding AL-KO wheel brake. You will see which type offers this additional benefit on the catalogue pages for overrun devices.

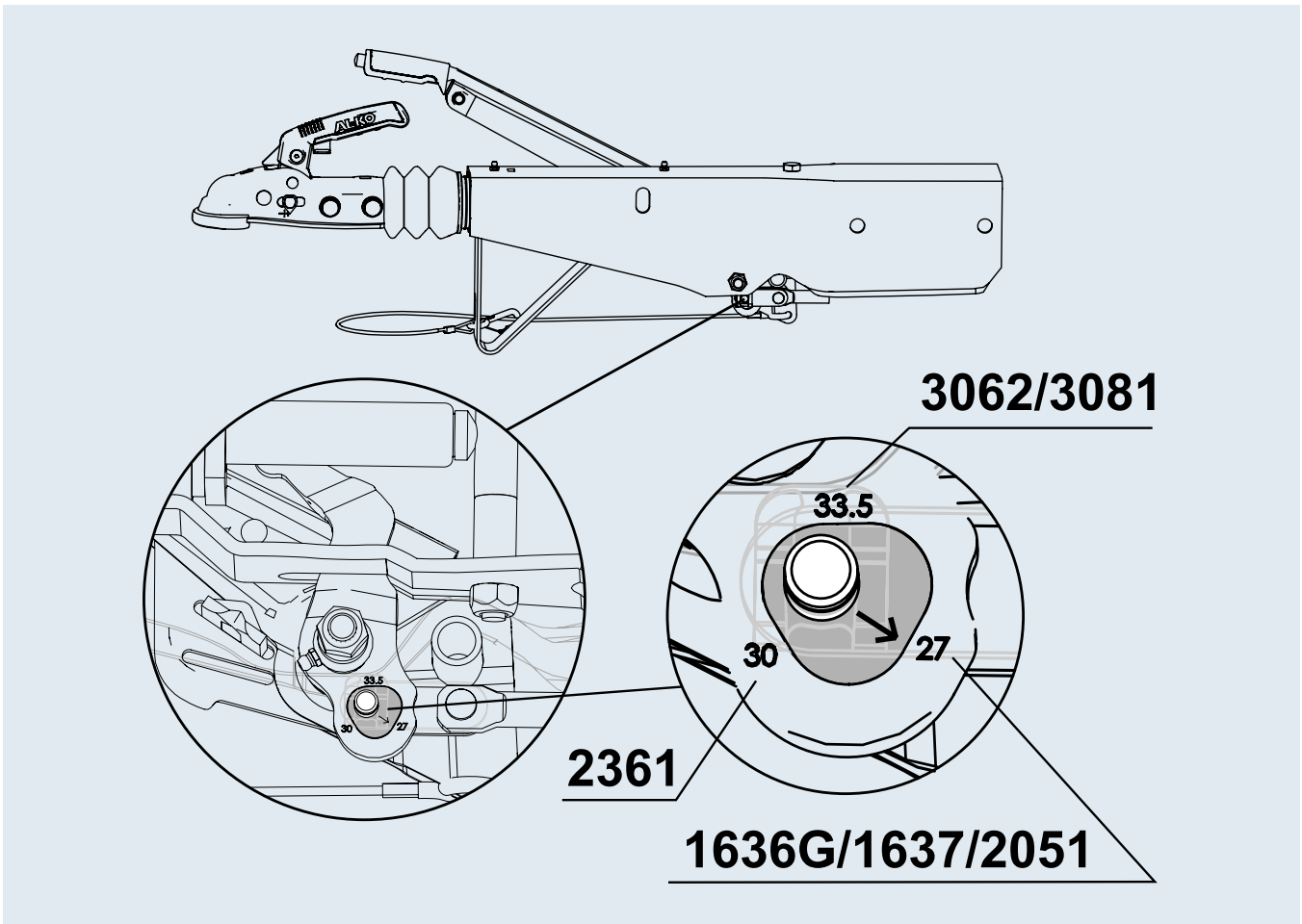

OVERRUN DEVICE SQUARE

without drawbar section 450 to 1,000 kg

SAP: AE KPL VKT 60 60S/2 AK161 GASF

AE VKT 60S/2 with AK 161 with Soft-Dock

Part no.	Type	Gross weight in kg	Nose load in kg	Dimension B ⍁ mm	Change-over relay lever?	Can be combined with AL-KO wheel brake	Hitch mounted				
1 251 900	60S/2	450 – 750	75	60	No	1636G / 1637	AK 161	10	–	50	2

ECE test report no.	ECE type approval no.
Overrun device: 361-0126-97	Drawbar installation: E1 55R-01 0234



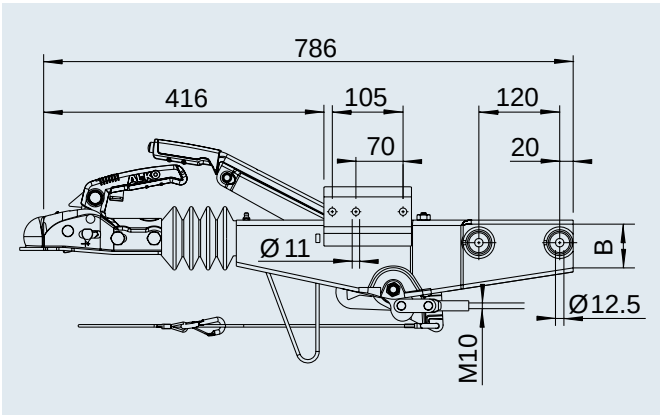

SAP: AE KPL VKT 70 60S/2 AK161 GASF

AE VKT 60S/2 with AK 161 with Soft-Dock

Part no.	Type	Gross weight in kg	Nose load in kg	Dimension B ⍁ mm	Change-over relay lever?	Can be combined with AL-KO wheel brake	Hitch mounted				
1 251 901	60S/2	450 – 750	75	70	No	1636G / 1637	AK 161	11	–	50	20

ECE test report no.	ECE type approval no.
Overrun device: 361-0126-97	Drawbar installation: E1 55R-01 0234



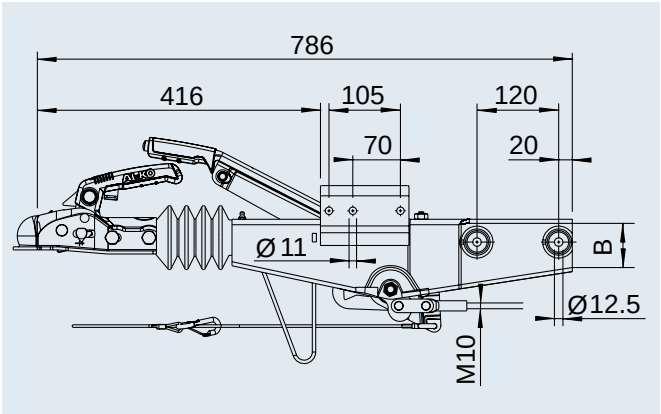

SAP: AE KPL VKT 60 90S/3 AK161 GASF

AE VKT 90S/3 with AK 161 with Soft-Dock

Part no.	Type	Gross weight in kg	Nose load in kg	Dimension B ⌀ mm	Change-over relay lever?	Can be combined with AL-KO wheel brake	Hitch mounted				
1 251 902	90S/3	700 – 1,000	75	60	No	1637 / 2051	AK 161	11	–	50	2

ECE test report no.	ECE type approval no.
Overrun device: 361-033-92	Drawbar installation: E1 55R-01 0233



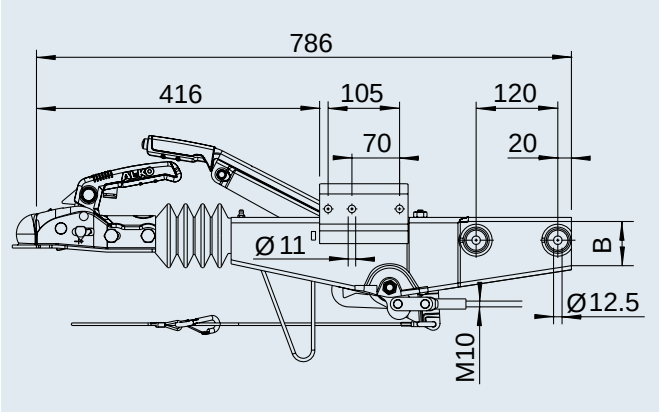

SAP: AE KPL VKT 70 90S/3 AK161 GASF

AE VKT 90S/3 with AK 161 with Soft-Dock

Part no.	Type	Gross weight in kg	Nose load in kg	Dimension B ⌀ mm	Change-over relay lever?	Can be combined with AL-KO wheel brake	Hitch mounted				
1 251 903	90S/3	700 – 1,000	75	70	No	1637 / 2051	AK 161	11	–	50	2

ECE test report no.	ECE type approval no.
Overrun device: 361-033-92	Drawbar installation: E1 55R-01 0233



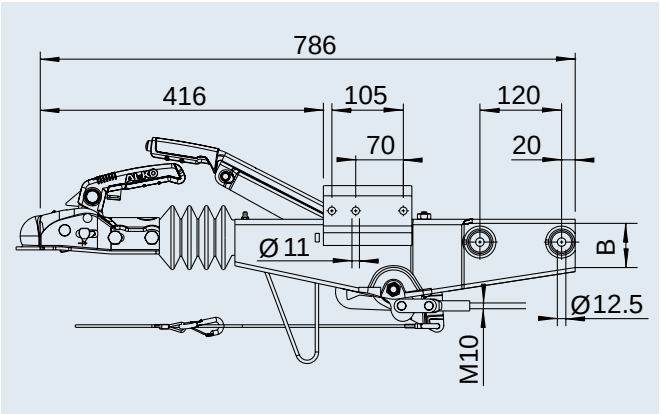

OVERRUN DEVICE SQUARE

without drawbar section 950 to 1,600 kg

SAP: AE KPL VKT 70 161S AK161 GASF

AE VKT 161 S – VKT 70 with AK 161 and Soft-Dock

Part no.	Type	Gross weight in kg	Nose load in kg	Dimension B ⊠ mm	Change-over relay lever?	Can be combined with AL-KO wheel brake	Hitch mounted				
1 251 904	161S	950 – 1,600	100	70	No	1636G/1637/2051	AK 161	15	–	40	2
1 251 905	161S	950 – 1,600	100	70	No	2361	AK 161	15	–	40	2

ECE test report no.
Overrun device: 361-0047-97

ECE type approval no.
Drawbar installation: E1 55R-01 0267

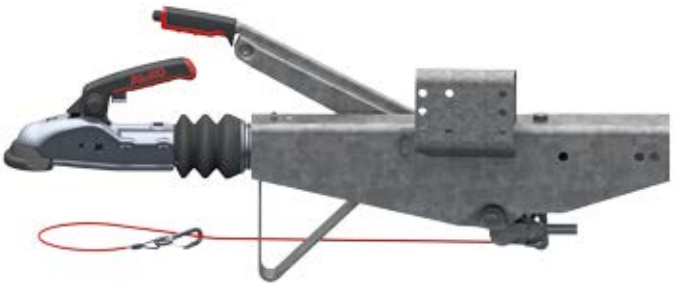

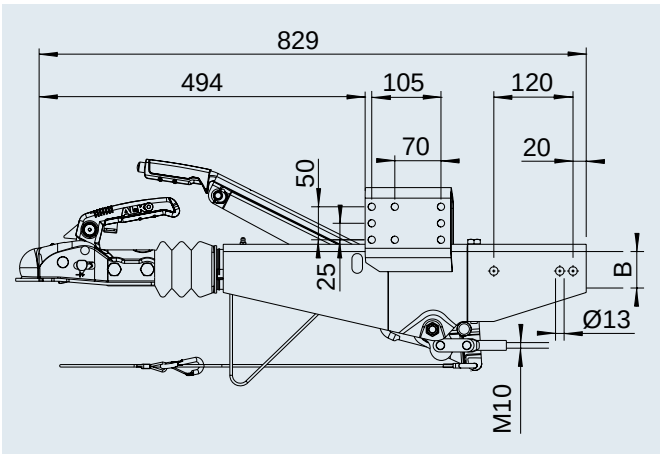

SAP: AE KPL VKT 100 161S AK161 GASF

AE VKT 161S – VKT 100 with AK 161 and Soft-Dock

Part no.	Type	Gross weight in kg	Nose load in kg	Dimension B ⊠ mm	Change-over relay lever?	Can be combined with AL-KO wheel brake	Hitch mounted				
1 251 906	161S	950 – 1,600	100	100	Yes	1637 / 2051	AK 161	16	–	40	2
1 251 907	161S	950 – 1,600	100	100	Yes	2361	AK 161	16	–	40	2

ECE test report no.
Overrun device: 361-0047-97

ECE type approval no.
Drawbar installation: E1 55R-01 0267

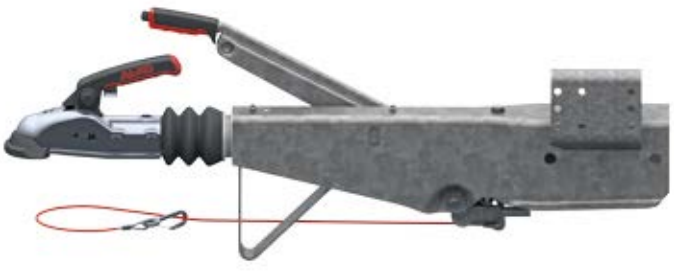

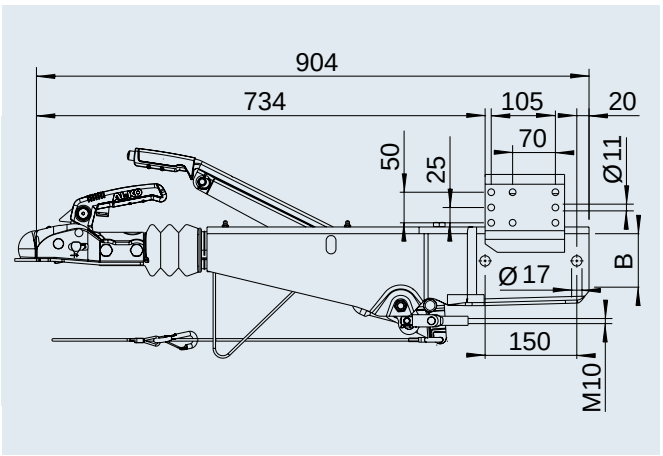

SAP: AE KPL VKT 100 161S DINÖSE GASF

AE VKT 161 S - VKT 100 with DIN eye

Part no.	Type	Gross weight in kg	Nose load in kg	Dimension B ⍁ mm	Change-over relay lever?	Can be combined with AL-KO wheel brake	Hitch mounted				
299 416	161S	950 – 1,600	100	100	Yes	1637 / 2051	DIN eye	17	–	40	20
242 958	161S	950 – 1,600	100	100	Yes	2361	DIN eye	17	–	40	20

ECE test report no.	ECE type approval no.
Overrun device: 361-0047-97	Drawbar installation: E1 55R-01 0267



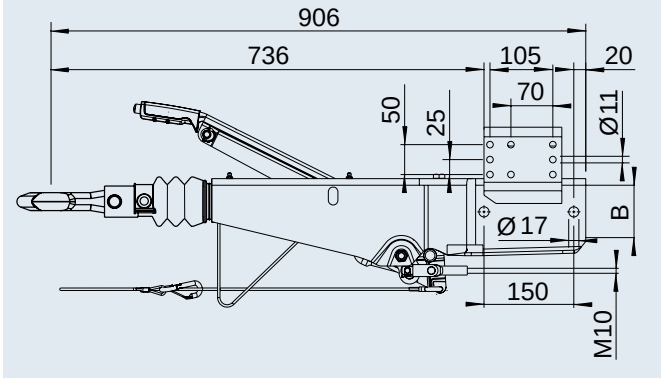

SAP: AE KPL VKT 100 251S AK270 GASF

AE VKT 251S – VKT 100 with AK 270 and Soft-Dock

Part no.	Type	Gross weight in kg	Nose load in kg	Dimension B ⍁ mm	Change-over relay lever?	Can be combined with AL-KO wheel brake	Hitch mounted				
1 253 078	251S	1,500 – 2,600	100	100	Yes	1637 / 2051	AK 270	14	–	10	20
1 731 207	251S	1,500 – 2,600	100	100	Yes	2361	AK 270	14	–	10	20

ECE test report no.	ECE type approval no.
Overrun device: 361-0044-97	Drawbar installation: E1 55R-01 0268



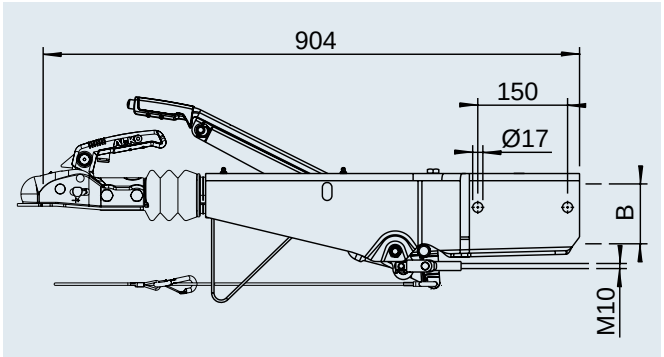

SAP: STUETZRADHALTER GESCHW

Jockey wheel carrier 800 kg

Part no.				
1 654 234	7.3	–	–	2



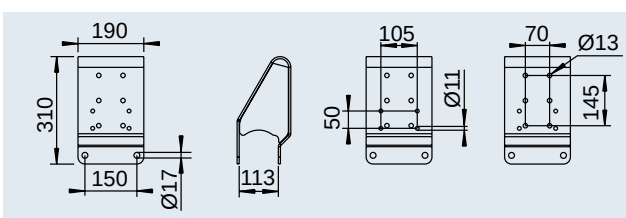

OVERRUN DEVICE SQUARE

without drawbar section 1,500 to 2,600 kg

SAP: AE KPL VKT 100 251S AK270 GASF

AE VKT 251S with AK 270 and Soft-Dock

Part no.	Type	Gross weight in kg	Nose load in kg	Dimension B ⊠ mm	Change-over relay lever?	Can be combined with AL-KO wheel brake	Hitch mounted				
1 251 908	251S	1,500 – 2,600	100	100	Yes	1637 / 2051	AK 270	20	–	25	2
1 251 909	251S	1,500 – 2,600	100	100	Yes	2361	AK 270	20	–	25	20

ECE test report no.	ECE type approval no.
Overrun device: 361-0044-97	Drawbar installation: E1 55R-01 0268



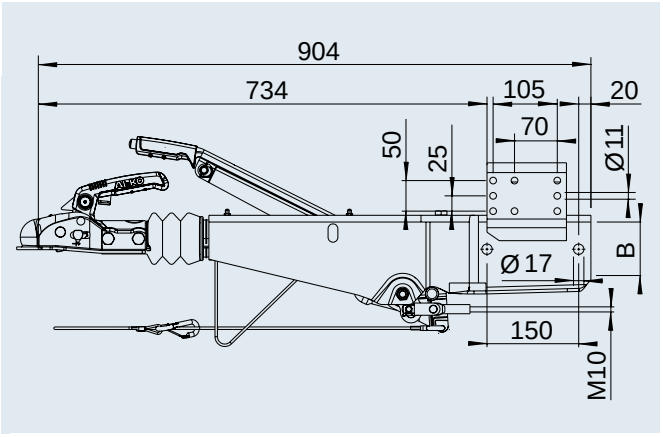

SAP: AE KPL VKT 100 251S DINÖSE GASF

AE VKT 251S with DIN eye

Part no.	Type	Gross weight in kg	Nose load in kg	Dimension B ⊠ mm	Change-over relay lever?	Can be combined with AL-KO wheel brake	Hitch mounted				
240 010	251S	1,500 – 2,600	100	100	Yes	1637 / 2051	DIN eye	21	–	25	20
242 960	251S	1,500 – 2,600	100	100	Yes	2361	DIN eye	21	–	25	20

ECE test report no.	ECE type approval no.
Overrun device: 361-0044-97	Drawbar installation: E1 55R-01 0268



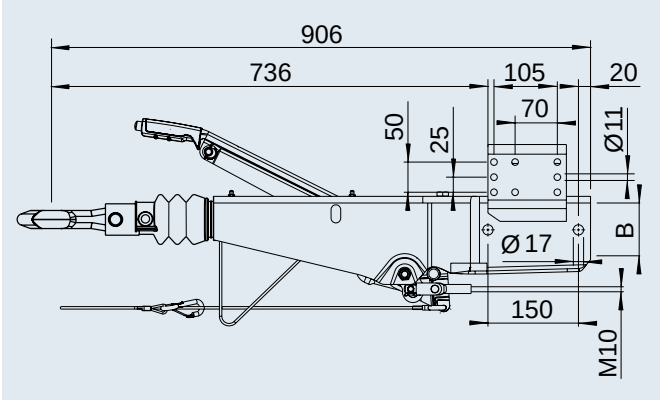

SQUARE OVERRUN DEVICE

without drawbar section 2,500 to 3,500 kg

SAP: AE KPL VKT 120 2,8VB AK351 FEDS

AE VKT 2.8 VB with coupling head AK 351

Part no.	Type	Gross weight in kg	Nose load in kg	Dimension ⍁ B	Change-over relay lever?	Can be combined with AL-KO wheel brake	Hitch mounted				
1 251 876	2.8VB1/-C	2,500 – 3,500	150	120	No	2051	AK 351	31	–	10	20
1 251 581	2.8VB1/-C	2,500 – 3,500	150	120	No	2361	AK 351	31	–	10	2
1 251 579	2.8VB1/-C	2,500 – 3,500	150	120	No	3062 / 3081	AK 351	31	–	10	20

ECE test report no.	ECE type approval no.
Overrun device: 361-0045-97	Drawbar installation: E1 55R-01 0378



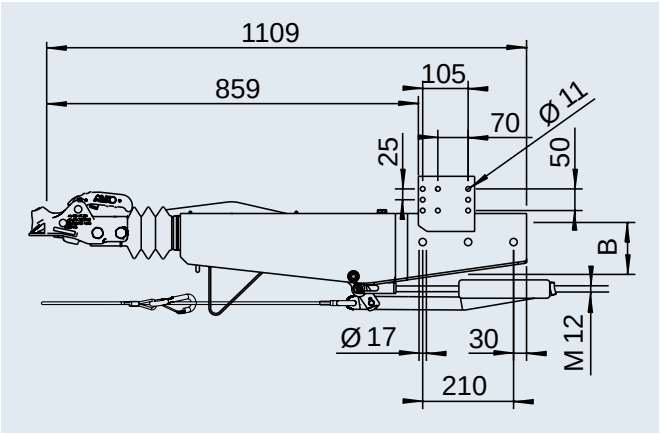

SAP: AE KPL VKT 120 2,8VB OHNE KUP FEDS

AE VKT 2.8 VB without hitch (see table of contents for appropriate coupling heads or drawbar eyes)

Part no.	Type	Gross weight in kg	Nose load in kg	Dimension ⍁ B	Change-over relay lever?	Can be combined with AL-KO wheel brake	Hitch mounted				
1 251 882	2.8VB1/-C	2,500 – 3,500	150	120	No	2051	without	28	–	10	20
1 251 621	2.8VB1/-C	2,500 – 3,500	150	120	No	2361	without	28	–	10	2
1 251 576	2.8VB1/-C	2,500 – 3,500	150	120	No	3062 / 3081	without	28	–	10	20

ECE test report no.	ECE type approval no.
Overrun device: 361-0045-97	Drawbar installation: E1 55R-01 0378



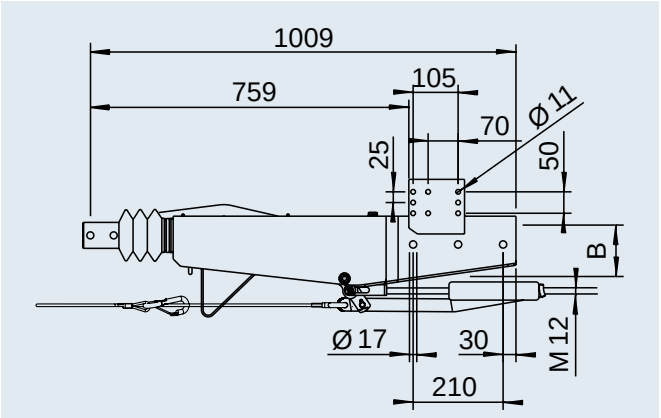

OVERRUN DEVICE SQUARE

without drawbar section 2,500 to 3,500 kg

SAP: AE KPL VKT 120 2,8VB AK351 FEDS

AE VKT 2.8 VB with coupling head AK 351

Part no.	Type	Gross weight in kg	Nose load in kg	Dimension ⍁ B	Change-over relay lever?	Can be combined with AL-KO wheel brake	Hitch mounted				
1 251 945	2.8VB1/-C	2,500 - 3,500	150	120	No	1637 / 2051	AK 351	26	–	10	20
1 251 578	2.8VB1/-C	2,500 - 3,500	150	120	No	2361	AK 351	26	–	10	2
1 251 895	2.8VB1/-C	2,500 - 3,500	150	120	No	3062 / 3081	AK 351	26	–	10	20

ECE test report no.
Overrun device: 361-0045-97

ECE type approval no.
Drawbar installation: E1 55R-01 0378



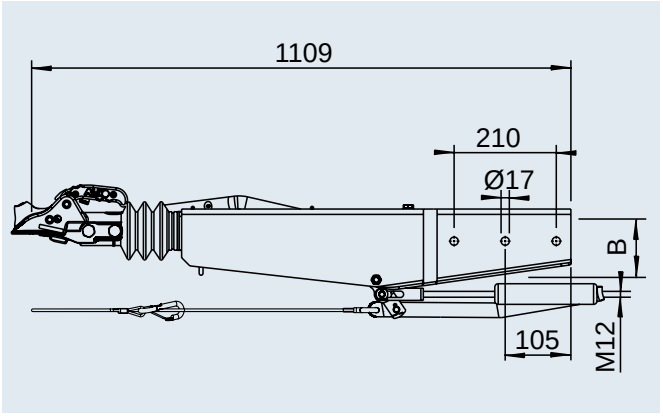

SAP: AE KPL VKT 120 2,8VB AK351 FEDS

Jockey wheel carrier 800 kg

Part no.				
1 654 240	6.3	–	–	2



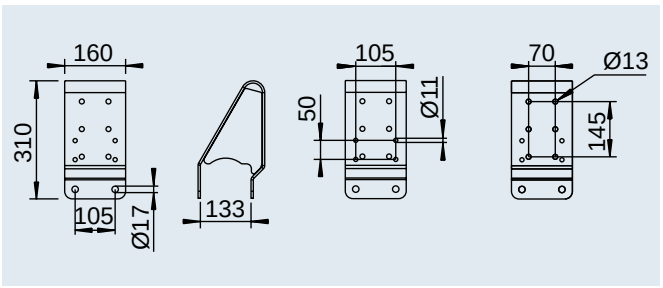

SQUARE OVERRUN DEVICE

with drawbar section straight 450 to 750 kg

TECHNOLOGY
Type 60 S/2 - R 4 vers. B 3
GA 450 to 750 kg
Perm. nose load 75 kg
Changeover relay lever:
☐ Yes ☒ No

ECE test report no.:
Overrun device: 361-0126-97
ECE type approval no.:
Drawbar installation: E1 55R-01 0234
Drawbar: E1 55R-01 0388

Max. free drawbar length at GA 750 kg:
1,470 mm

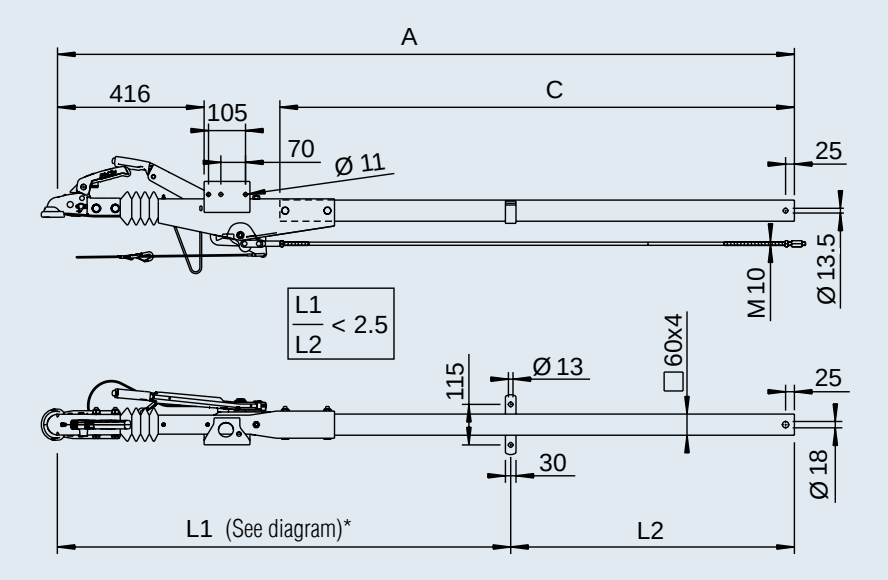

* Diagram see table of contents

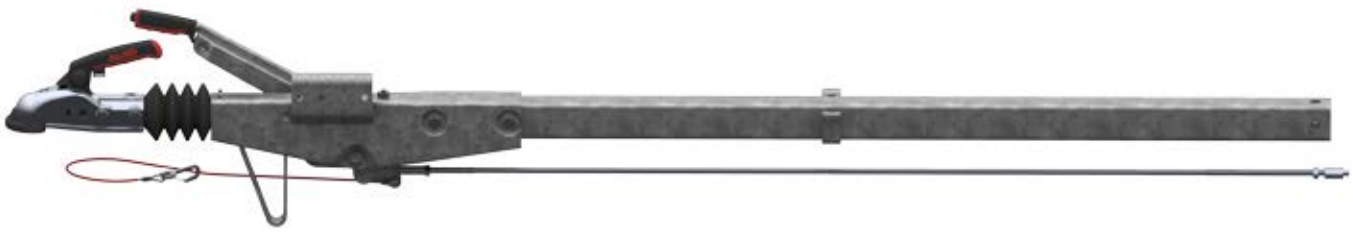

SAP: AE KPL VKT 60S/2 M ZUGVERBNDG R4/B3

With coupling head AK 161 for wheel brake 1636G / 1637 / 2051 (90/27)

Part no.	Dimension C in mm	Dimension A in mm				
200 617 01	730	1,357	19.9	–	25	10
200 617 02	980	1,607	20.8	–	25	10
200 617 03	1,140	1,767	21.7	–	25	10
200 617 04	1,300	1,927	22.6	–	25	10
200 617 05	1,460	2,087	23.5	–	25	10
200 617 06	1,620	2,247	24.4	–	25	10
200 617 07	1,780	2,407	25.3	–	25	10
200 617 08	1,940	2,567	26.2	–	25	10
200 617 09	2,100	2,727	27.1	–	25	10
200 617 10	2,260	2,887	28.0	–	25	10
200 617 11	2,420	3,047	28.9	–	25	10
200 617 12	2,580	3,207	29.8	–	25	10
200 617 13	2,740	3,367	30.7	–	25	10
200 617 14	2,900	3,527	31.6	–	25	10

SQUARE OVERRUN DEVICE

with drawbar section straight 700 to 1,000 kg

TECHNOLOGY
Type 90 S/3 - R 4 vers. B 3
GA 700 to 1,000 kg
Perm. nose load 75 kg
Changeover relay lever:
☐ Yes ☒ No

ECE test report no.:
Overrun device: 361-033-92
ECE type approval no.:
Drawbar installation: E1 55R-01 0233
Drawbar: E1 55R-01 0388

Max. free drawbar length at GA 1,000 kg:
1,100 mm

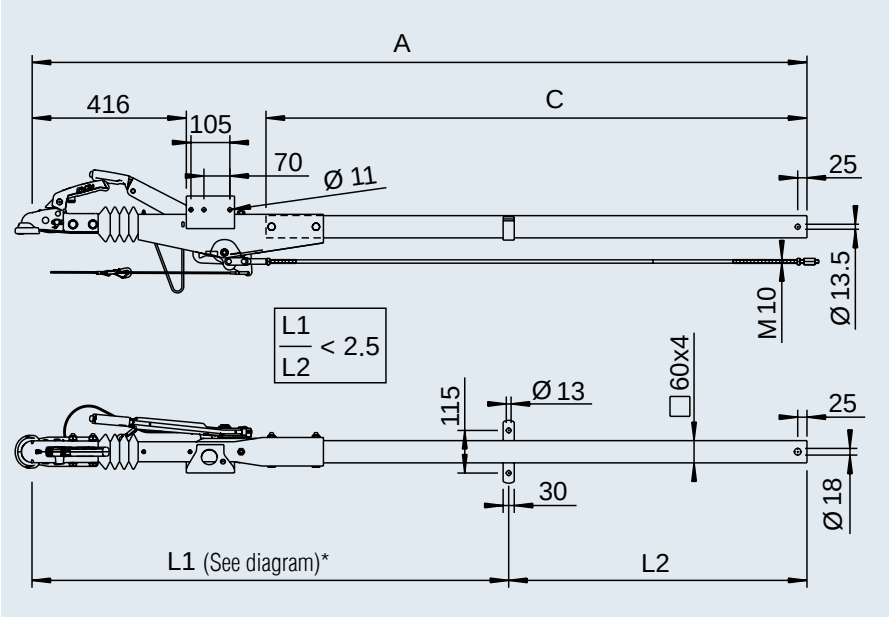

* Diagram see table of contents



SAP: AE KPL VKT 90S/3 M ZUGVERBNDG R4/B3

With coupling head AK 161 for wheel brake 1636G / 1637 / 2051 (90/27)

Part no.	Dimension C in mm	Dimension A in mm				
200 618 01	730	1,357	20.3	–	25	10
200 618 02	980	1,607	21.2	–	25	10
200 618 03	1,140	1,767	22.1	–	25	10
200 618 04	1,300	1,927	23.0	–	25	10
200 618 05	1,460	2,087	23.9	–	25	10
200 618 06	1,620	2,247	24.8	–	25	10
200 618 07	1,780	2,407	25.7	–	25	10
200 618 08	1,940	2,567	26.6	–	25	10
200 618 09	2,100	2,727	27.5	–	25	10
200 618 10	2,260	2,887	28.4	–	25	10
200 618 11	2,420	3,047	29.3	–	25	10
200 618 12	2,580	3,207	30.2	–	25	10
200 618 13	2,740	3,367	31.1	–	25	10
200 618 14	2,900	3,527	32.0	–	25	10

SQUARE OVERRUN DEVICE

with drawbar section cranked 700 to 1,000 kg

TECHNOLOGY
Type 90 S/3 - K10 vers. A
GA 700 to 1,000 kg
Perm. nose load 75 kg
Changeover relay lever:
☐ Yes ☒ No

ECE test report no.:
Overrun device: 361-0033-92
ECE type approval no.:
Drawbar installation: E1 55R-01 0233
Drawbar: E1 55R-01 2390

Max. free drawbar length with GA 1,000 kg:
1,450 mm

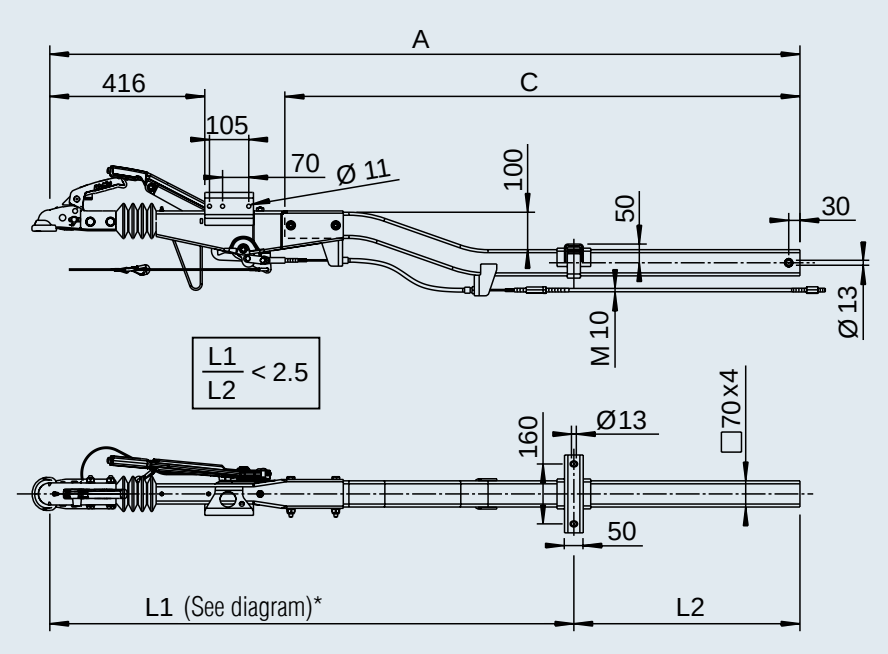

* Diagram see table of contents



SAP: AE VKT 90S/3 M ZUGVER K10

With coupling head AK 161 for wheel brake 1636 G / 1637 / 2051 (90/27)

Part no.	Dimension C in mm	Dimension A in mm				
200 614 01	1,380	2,005	26.5	–	20	10
200 614 02	1,540	2,165	27.8	–	20	10
200 614 03	1,700	2,325	29.2	–	20	10
200 614 04	1,860	2,485	30.5	–	20	10
200 614 05	2,020	2,645	31.9	–	20	10
200 614 06	2,180	2,805	33.2	–	20	10
200 614 07	2,340	2,965	34.5	–	20	10
200 614 08	2,500	3,125	35.8	–	20	10
200 614 09	2,660	3,285	37.2	–	20	10
200 614 10	2,820	3,445	38.5	–	20	10

SQUARE OVERRUN DEVICE

with drawbar section cranked 700 to 1350 kg

TECHNOLOGY
Type 161 S/B - K16
GA 700 to 1,350 kg
Perm. nose load 100 kg
Changeover relay lever:
☐ Yes ☒ No

ECE test report no.:
Overrun device: 361-0047-97
ECE type approval no.:
Drawbar installation: E1 55R-01 0267
Drawbar: E1 55R-01 1469

Max. free drawbar length with GA 1,350 kg: 1,300 mm

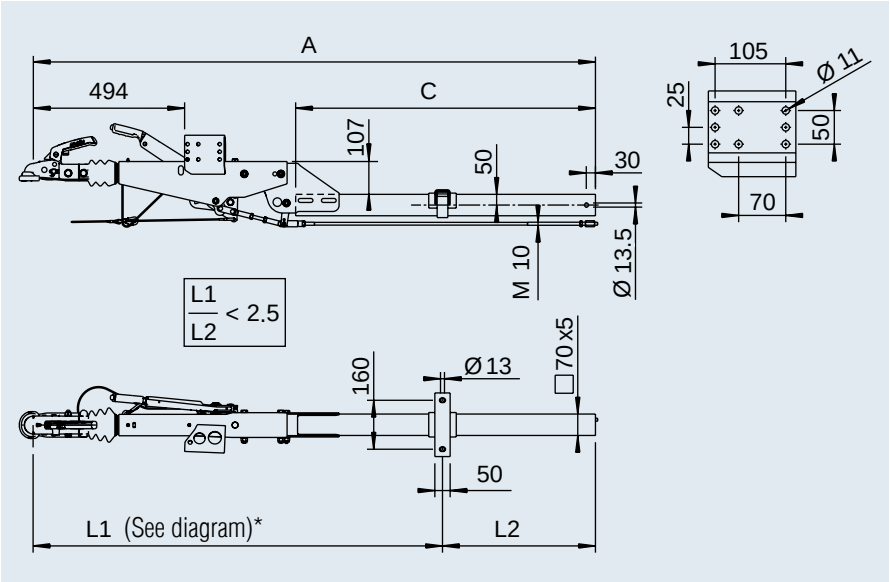

* Diagram see table of contents

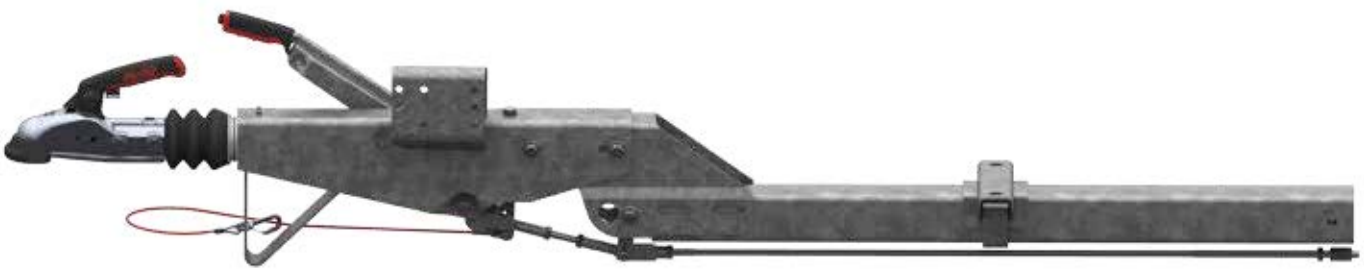

SAP: AE KPL VKT 161S/B M ZUGVERBNDG K16

With coupling head AK 161 for wheel brake 1637 / 2051 (90/27)

Part no.	Dimension C in mm	Dimension A in mm				
200 619 01	980	1,830	35.7	–	20	10
200 619 02	1,140	1,990	37.3	–	20	10
200 619 03	1,300	2,150	38.9	–	20	10
200 619 04	1,460	2,310	40.5	–	20	10
200 619 05	1,620	2,470	42.1	–	20	10
200 619 06	1,780	2,630	43.7	–	20	10
200 619 07	1,940	2,790	45.3	–	20	10
200 619 08	2,100	2,950	46.9	–	20	10
200 619 09	2,260	3,110	48.5	–	20	10
200 619 10	2,420	3,270	50.1	–	20	10
200 619 11	2,580	3,430	51.7	–	20	10
200 619 12	2,740	3,590	53.3	–	20	10
200 619 13	2,900	3,750	54.9	–	20	10

With DIN drawbar eye Ø 40 for wheel brake 1637 / 2051 (90/27)

On request

SQUARE OVERRUN DEVICE

with drawbar section straight 950 to 1,600 kg

TECHNOLOGY
Type 161 S - R16 vers. A
GA 950 to 1,600 kg
Perm. nose load 100 kg
Changeover relay lever:
☐ Yes ☒ No

ECE test report no.:
Overrun device: 361-0047-97
ECE type approval no.:
Drawbar installation: E1 55R-01 0267
Drawbar: E1 55R-01 0274

Max. free drawbar length with GA 1,500 kg:
1,100 mm

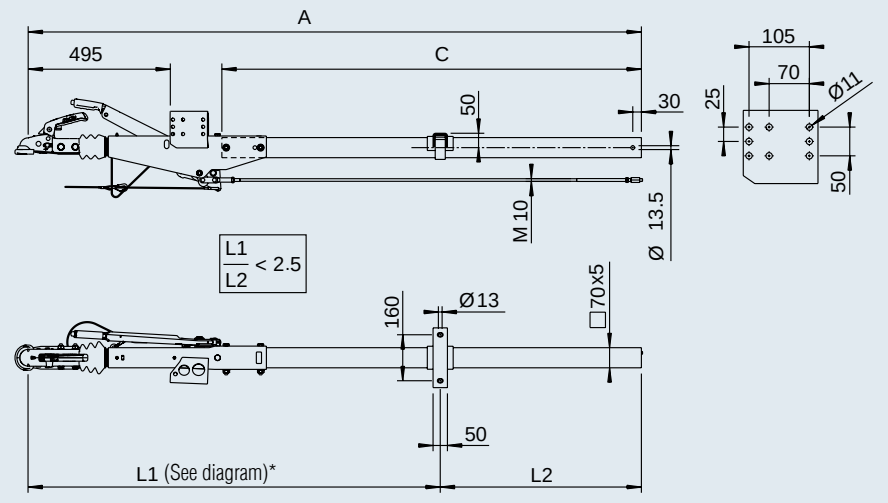

* Diagram see table of contents

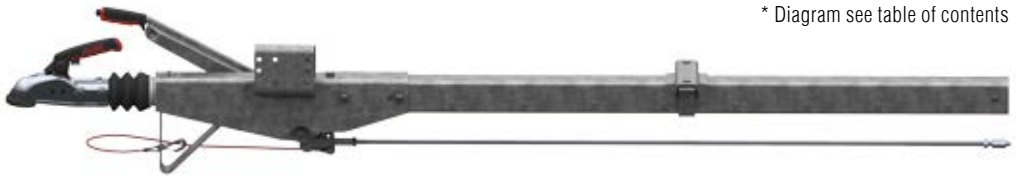

SAP: AE KPL VKT 161S M ZUGVERBNDG R16/A

With coupling head AK 161 for wheel brake 1637 / 2051 (90/27)

Part no.	Dimension C in mm	Dimension A in mm				
200 620 01	730	1,397	28.6	–	20	10
200 620 02	980	1,647	30.0	–	20	10
200 620 03	1,140	1,807	31.4	–	20	10
200 620 04	1,300	1,967	32.8	–	20	10
200 620 05	1,460	2,127	34.2	–	20	10
200 620 06	1,620	2,287	35.6	–	20	10
200 620 07	1,780	2,447	37.0	–	20	10
200 620 08	1,940	2,607	38.4	–	20	10
200 620 09	2,100	2,767	39.8	–	20	10
200 620 10	2,260	2,927	41.2	–	20	10
200 620 11	2,420	3,087	42.6	–	20	10
200 620 12	2,580	3,247	44.0	–	20	10
200 620 13	2,740	3,407	45.4	–	20	10
200 620 14	2,900	3,567	46.8	–	20	10

With coupling head AK 161 for wheel brake 2361 (90/30)

Part no.	Dimension C in mm	Dimension A in mm				
200 621 01	730	1,397	28.6	–	20	10
200 621 02	980	1,647	30.0	–	20	10
200 621 03	1,140	1,807	31.4	–	20	10
200 621 04	1,300	1,967	32.8	–	20	10
200 621 05	1,460	2,127	34.2	–	20	10
200 621 06	1,620	2,287	35.6	–	20	10
200 621 07	1,780	2,447	37.0	–	20	10
200 621 08	1,940	2,607	38.4	–	20	10
200 621 09	2,100	2,767	39.8	–	20	10
200 621 10	2,260	2,927	41.2	–	20	10
200 621 11	2,420	3,087	42.6	–	20	10
200 621 12	2,580	3,247	44.0	–	20	10
200 621 13	2,740	3,407	45.4	–	20	10
200 621 14	2,900	3,567	46.8	–	20	10

With DIN drawbar eye Ø 40 for wheel brake 1637 / 2051 (90/27)

Part no.	Dimension C in mm	Dimension A in mm				
200 357 25	730	1,397	28.6	–	20	10
200 357 26	980	1,647	30.0	–	20	10
200 357 27	1,140	1,807	31.4	–	20	10
200 357 28	1,300	1,967	32.8	–	20	10
200 357 29	1,460	2,127	34.2	–	20	10
200 357 30	1,620	2,287	35.6	–	20	10
200 357 31	1,780	2,447	37.0	–	20	10
200 357 32	1,940	2,607	38.4	–	20	10
200 357 33	2,100	2,767	39.8	–	20	10
200 357 34	2,260	2,927	41.2	–	20	10
200 357 35	2,420	3,087	42.6	–	20	10
200 357 36	2,580	3,247	44.0	–	20	10
200 357 37	2,740	3,407	45.4	–	20	10
200 357 38	2,900	3,567	46.8	–	20	10

With DIN drawbar eye Ø 40 for wheel brake 2361 (90/30)

Part no.	Dimension C in mm	Dimension A in mm				
200 357 39	730	1,397	28.6	–	20	10
200 357 40	980	1,647	30.0	–	20	10
200 357 41	1,140	1,807	31.4	–	20	10
200 357 42	1,300	1,967	32.8	–	20	10
200 357 43	1,460	2,127	34.2	–	20	10
200 357 44	1,620	2,287	35.6	–	20	10
200 357 45	1,780	2,447	37.0	–	20	10
200 357 46	1,940	2,607	38.4	–	20	10
200 357 47	2,100	2,767	39.8	–	20	10
200 357 48	2,260	2,927	41.2	–	20	10
200 357 49	2,420	3,087	42.6	–	20	10
200 357 50	2,580	3,247	44.0	–	20	10
200 357 51	2,740	3,407	45.4	–	20	10
200 357 52	2,900	3,567	46.8	–	20	10

SQUARE OVERRUN DEVICE

with drawbar section straight 950 to 1,600 kg

TECHNOLOGY

Type 161 S - R26 vers. A

GA 950 to 1,600 kg

Perm. nose load 100 kg

Changeover relay lever:

☒ Yes ☐ No

ECE test report no.:

Overrun device: 361-0047-97

ECE type approval no.:

Drawbar installation: E1 55R-01 0267

Drawbar: E1 55R-01 0280

Max. free drawbar length with GA 1,600 kg: 2,250 mm

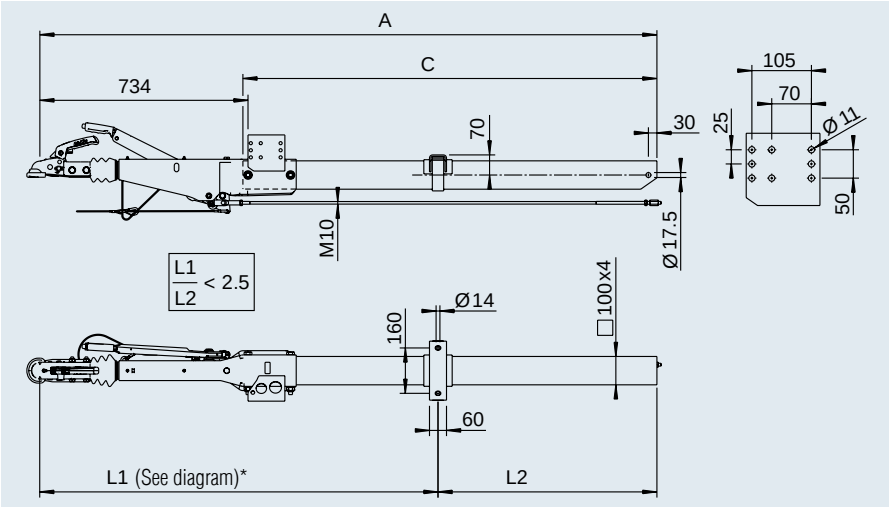

* Diagram see table of contents



SAP: AE KPL VKT 161S M ZUGVERBNDG R26/A

With coupling head AK 161 for wheel brake 1637 / 2051 (90/27)

Part no.	Dimension C in mm	Dimension A in mm				
200 622 01	980	1,690	37.8	–	20	10
200 622 02	1,140	1,850	39.8	–	20	10
200 622 03	1,300	2,010	41.8	–	20	10
200 622 04	1,460	2,170	43.8	–	20	10
200 622 05	1,620	2,330	45.8	–	20	10
200 622 06	1,780	2,490	47.8	–	20	10
200 622 07	1,940	2,650	49.8	–	20	10
200 622 08	2,100	2,810	51.8	–	20	10
200 622 09	2,260	2,970	53.8	–	20	10
200 622 10	2,420	3,130	55.8	–	20	10
200 622 11	2,580	3,290	57.8	–	20	10
200 622 12	2,740	3,450	59.8	–	20	10
200 622 13	2,900	3,610	61.8	–	20	10

With coupling head AK 161 for wheel brake 2361 (90/30)

Part no.	Dimension C in mm	Dimension A in mm				
200 623 01	980	1,647	37.8	–	20	10
200 623 02	1,140	1,807	39.8	–	20	10
200 623 03	1,300	1,967	41.8	–	20	10
200 623 04	1,460	2,127	43.8	–	20	10
200 623 05	1,620	2,287	45.8	–	20	10
200 623 06	1,780	2,447	47.8	–	20	10
200 623 07	1,940	2,607	49.8	–	20	10
200 623 08	2,100	2,767	51.8	–	20	10
200 623 09	2,260	2,927	53.8	–	20	10
200 623 10	2,420	3,087	55.8	–	20	10
200 623 11	2,580	3,247	57.8	–	20	10
200 623 12	2,740	3,407	59.8	–	20	10
200 623 13	2,900	3,567	61.8	–	20	10

With DIN drawbar eye Ø 40 for wheel brake 1637 / 2051 (90/27)

Part no.	Dimension C in mm	Dimension A in mm				
200 358 24	980	1,690	37.8	–	20	10
200 358 25	1,140	1,850	39.8	–	20	10
200 358 26	1,300	2,010	41.8	–	20	10
200 358 27	1,460	2,170	43.8	–	20	10
200 358 28	1,620	2,330	45.8	–	20	10
200 358 29	1,780	2,490	47.8	–	20	10
249 285	1,940	2,650	49.8	–	20	10
200 358 30	2,100	2,810	51.8	–	20	10
200 358 31	2,260	2,970	53.8	–	20	10
200 358 32	2,420	3,130	55.8	–	20	10
200 358 33	2,580	3,290	57.8	–	20	10
200 358 34	2,740	3,450	59.8	–	20	10
200 358 35	2,900	3,610	61.8	–	20	10

With DIN drawbar eye Ø 40 for wheel brake 2361 (90/30)

Part no.	Dimension C in mm	Dimension A in mm				
200 358 36	980	1,690	37.8	–	20	10
200 358 37	1,140	1,850	39.8	–	20	10
200 358 38	1,300	2,010	41.8	–	20	10
200 358 39	1,460	2,170	43.8	–	20	10
200 358 40	1,620	2,330	45.8	–	20	10
200 358 41	1,780	2,490	47.8	–	20	10
200 358 42	1,940	2,650	49.8	–	20	10
200 358 43	2,100	2,810	51.8	–	20	10
200 358 44	2,260	2,970	53.8	–	20	10
200 358 45	2,420	3,130	55.8	–	20	10
200 358 46	2,580	3,290	57.8	–	20	10
200 358 47	2,740	3,450	59.8	–	20	10
200 358 48	2,900	3,610	61.8	–	20	10

SQUARE OVERRUN DEVICE

with drawbar section cranked 950 to 1,600 kg

TECHNOLOGY
Type 161 S - K26 vers. A
GA 950 to 1,600 kg
Perm. nose load 100 kg
Changeover relay lever:
☒ Yes ☐ No

ECE test report no.:
Overrun device: 361-0047-97
ECE type approval no.:
Drawbar installation: E1 55R-01 0267
Drawbar: E1 55R-01 0925

Max. free drawbar length with GA 1,600 kg: 2,130 mm

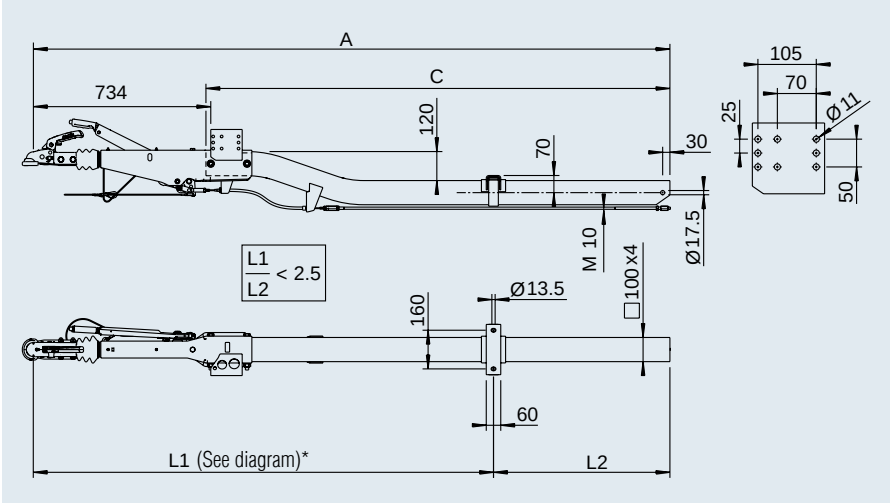

* Diagram see table of contents



SAP: AE KPL VKT 161S M ZUGVERBNDG K26/A

With coupling head AK 161 for wheel brake 1637 / 2051 (90/27)

Part no.	Dimension C in mm	Dimension A in mm				
200 624 01	1,280	1,990	44	–	20	10
200 624 02	1,440	2,150	46	–	20	10
200 624 03	1,600	2,310	48	–	20	10
200 624 04	1,760	2,470	50	–	20	10
200 624 05	1,920	2,630	52	–	20	10
200 624 06	2,080	2,790	54	–	20	10
200 624 07	2,240	2,950	56	–	20	10
200 624 08	2,400	3,110	58	–	20	10
200 624 09	2,560	3,270	60	–	20	10
200 624 10	2,720	3,430	62	–	20	10
200 624 11	2,880	3,590	64	–	20	10

With coupling head AK 161 for wheel brake 2361 (90/30)

Part no.	Dimension C in mm	Dimension A in mm				
200 625 01	1,280	1,990	44	–	20	10
200 625 02	1,440	2,150	46	–	20	10
200 625 03	1,600	2,310	48	–	20	10
200 625 04	1,760	2,470	50	–	20	10
200 625 05	1,920	2,630	52	–	20	10
200 625 06	2,080	2,790	54	–	20	10
200 625 07	2,240	2,950	56	–	20	10
200 625 08	2,400	3,110	58	–	20	10
200 625 09	2,560	3,270	60	–	20	10
200 625 10	2,720	3,430	62	–	20	10
200 625 11	2,880	3,590	64	–	20	10

With DIN drawbar eye Ø 40 for wheel brake 1637 / 2051 (90/27)

Part no.	Dimension C in mm	Dimension A in mm				
200 359 22	1,280	1,990	44	–	20	10
200 359 23	1,440	2,150	46	–	20	10
200 359 24	1,600	2,310	48	–	20	10
200 359 25	1,760	2,470	50	–	20	10
200 359 26	1,920	2,630	52	–	20	10
200 359 27	2,080	2,790	54	–	20	10
200 359 28	2,240	2,950	56	–	20	10
200 359 29	2,400	3,110	58	–	20	10
200 359 30	2,560	3,270	60	–	20	10
200 359 31	2,720	3,430	62	–	20	10
200 359 32	2,880	3,590	64	–	20	10

With DIN drawbar eye Ø 40 for wheel brake 2361 (90/30)

Part no.	Dimension C in mm	Dimension A in mm				
200 359 33	1,280	1,990	44	–	20	10
200 359 34	1,440	2,150	46	–	20	10
200 359 35	1,600	2,310	48	–	20	10
200 359 36	1,760	2,470	50	–	20	10
200 359 37	1,920	2,630	52	–	20	10
200 359 38	2,080	2,790	54	–	20	10
200 359 39	2,240	2,950	56	–	20	10
200 359 40	2,400	3,110	58	–	20	10
200 359 41	2,560	3,270	60	–	20	10
200 359 42	2,720	3,430	62	–	20	10
200 359 43	2,880	3,590	64	–	20	10

SQUARE OVERRUN DEVICE

with drawbar section cranked 1,600 to 2,200 kg

TECHNOLOGY

Type 251 S - K26 vers. A

GA 1,500 to 2,200 kg

Perm. nose load 100 kg

Changeover relay lever:

☒ Yes ☐ No

ECE test report no.:

Overrun device: 361-0044-97

ECE type approval no.:

Drawbar installation: E1 55R-01 0268

Drawbar: E1 55R-01 0925

Max. free drawbar length with GA 1,600 kg: 1,550 mm

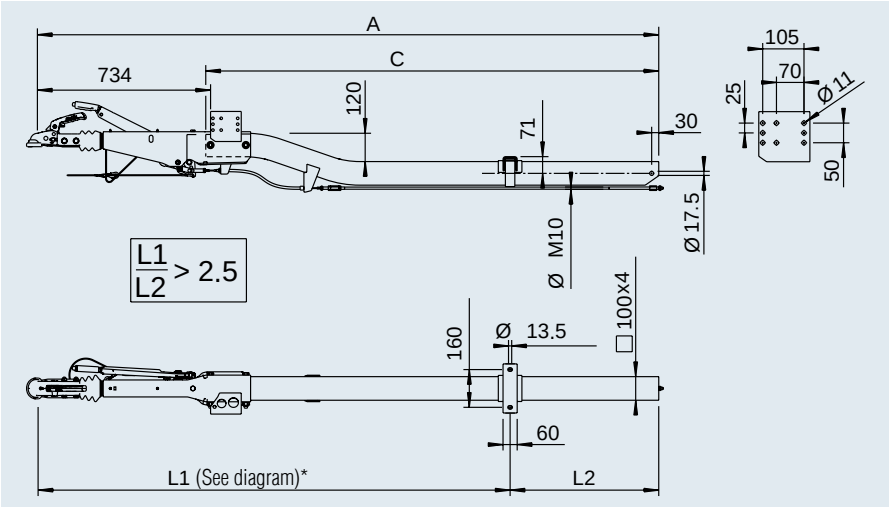

* Diagram see table of contents



SAP: AE KPL VKT 251S M ZUGVERBNDG K26/A

With coupling head AK 270 for wheel brake 1637 / 2051 (90/27)

Part no.	Dimension C in mm	Dimension A in mm				
200 628 01	1,280	1,990	44	–	20	10
200 628 02	1,440	2,150	46	–	20	10
200 628 03	1,600	2,310	48	–	20	10
200 628 04	1,760	2,470	50	–	20	10
200 628 05	1,920	2,630	52	–	20	10
200 628 06	2,080	2,790	54	–	20	10
200 628 07	2,240	2,950	56	–	20	10
200 628 08	2,400	3,110	58	–	20	10
200 628 09	2,560	3,270	60	–	20	10
200 628 10	2,720	3,430	62	–	20	10
200 628 11	2,880	3,590	64	–	20	10

With coupling head AK 270 for wheel brake 2361 (90/30)

Part no.	Dimension C in mm	Dimension A in mm				
200 629 01	1,280	1,990	44	–	20	10
200 629 02	1,440	2,150	46	–	20	10
200 629 03	1,600	2,310	48	–	20	10
200 629 04	1,760	2,470	50	–	20	10
200 629 05	1,920	2,630	52	–	20	10
200 629 06	2,080	2,790	54	–	20	10
200 629 07	2,240	2,950	56	–	20	10
200 629 08	2,400	3,110	58	–	20	10
200 629 09	2,560	3,270	60	–	20	10
200 629 10	2,720	3,430	62	–	20	10
200 629 11	2,880	3,590	64	–	20	10

With DIN drawbar eye Ø 40 for wheel brake 1637 / 2051 (90/27)

Part no.	Dimension C in mm	Dimension A in mm				
200 360 22	1,280	1,990	44	–	20	10
200 360 23	1,440	2,150	46	–	20	10
200 360 24	1,600	2,310	48	–	20	10
200 360 25	1,760	2,470	50	–	20	10
200 360 26	1,920	2,630	52	–	20	10
200 360 27	2,080	2,790	54	–	20	10
200 360 28	2,240	2,950	56	–	20	10
200 360 29	2,400	3,110	58	–	20	10
200 360 30	2,560	3,270	60	–	20	10
200 360 31	2,720	3,430	62	–	20	10
200 360 32	2,880	3,590	64	–	20	10

With DIN drawbar eye Ø 40 for wheel brake 2361 (90/30)

Part no.	Dimension C in mm	Dimension A in mm				
200 360 33	1,280	1,990	44	–	20	10
200 360 34	1,440	2,150	46	–	20	10
200 360 35	1,600	2,310	48	–	20	10
200 360 36	1,760	2,470	50	–	20	10
200 360 37	1,920	2,630	52	–	20	10
200 360 38	2,080	2,790	54	–	20	10
200 360 39	2,240	2,950	56	–	20	10
200 360 40	2,400	3,110	58	–	20	10
200 360 41	2,560	3,270	60	–	20	10
200 360 42	2,720	3,430	62	–	20	10
200 360 43	2,880	3,590	64	–	20	10

SQUARE OVERRUN DEVICE

with drawbar section straight 1,500 to 2,600 kg

TECHNOLOGY
Type 251 S - R26 vers. A
GA 1,500 to 2,600 kg
Perm. nose load 100 kg
Changeover relay lever:
☒ Yes ☐ No

ECE test report no.:
Overrun device: 361-0044-97
ECE type approval no.:
Drawbar installation: E1 55R-01 0268
Drawbar: E1 55R-01 0280

Max. free drawbar length with GA 2,600 kg: 1,400 mm

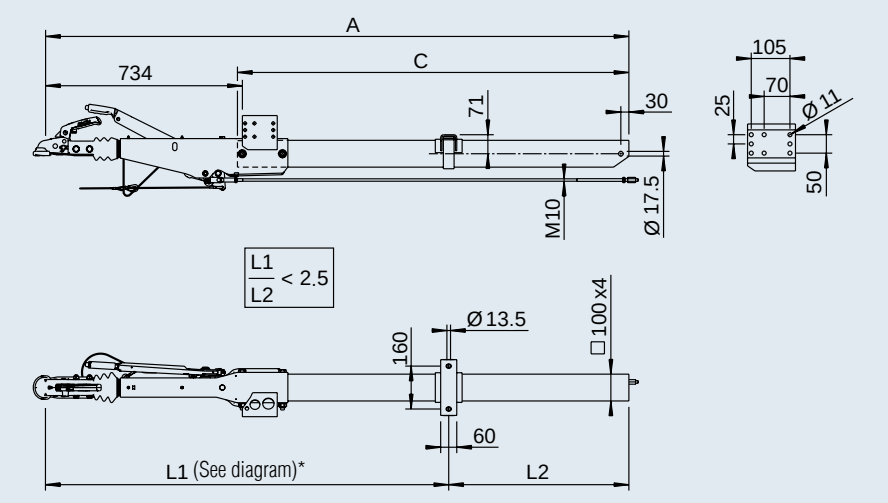

* Diagram see table of contents



SAP: AE KPL VKT 251S M ZUGVERBNDG R26/A

With coupling head AK 270 for wheel brake 1637 / 2051 (90/27)

Part no.	Dimension C in mm	Dimension A in mm				
200 626 01	980	1,690	41.5	–	20	10
200 626 02	1,140	1,850	43.4	–	20	10
200 626 03	1,300	2,010	45.3	–	20	10
200 626 04	1,460	2,170	47.2	–	20	10
200 626 05	1,620	2,330	49.1	–	20	10
200 626 06	1,780	2,490	51.0	–	20	10
200 626 07	1,940	2,650	52.9	–	20	10
200 626 08	2,100	2,810	54.8	–	20	10
200 626 09	2,260	2,970	56.7	–	20	10
200 626 10	2,420	3,130	58.6	–	20	10
200 626 11	2,580	3,290	60.5	–	20	10
200 626 12	2,740	3,450	62.4	–	20	10
200 626 13	2,900	3,610	64.3	–	20	10

With coupling head AK 270 for wheel brake 2361 (90/30)

Part no.	Dimension C in mm	Dimension A in mm				
200 627 01	980	1,690	41.5	–	20	10
200 627 02	1,140	1,850	43.4	–	20	10
200 627 03	1,300	2,010	45.3	–	20	10
200 627 04	1,460	2,170	47.2	–	20	10
200 627 05	1,620	2,330	49.1	–	20	10
200 627 06	1,780	2,490	51.0	–	20	10
200 627 07	1,940	2,650	52.9	–	20	10
200 627 08	2,100	2,810	54.8	–	20	10
200 627 09	2,260	2,970	56.7	–	20	10
200 627 10	2,420	3,130	58.6	–	20	10
200 627 11	2,580	3,290	60.5	–	20	10
200 627 12	2,740	3,450	62.4	–	20	10
200 627 13	2,900	3,610	64.3	–	20	10

With DIN drawbar eye Ø 40 for wheel brake 1637 / 2051 (90/27)

Part no.	Dimension C in mm	Dimension A in mm				
200 361 24	980	1,690	41.5	–	20	10
200 361 25	1,140	1,850	43.4	–	20	10
200 361 26	1,300	2,010	45.3	–	20	10
200 361 27	1,460	2,170	47.2	–	20	10
200 361 28	1,620	2,330	49.1	–	20	10
200 361 29	1,780	2,490	51.0	–	20	10
249 275	1,940	2,650	52.9	–	20	10
200 361 30	2,100	2,810	54.8	–	20	10
200 361 31	2,260	2,970	56.7	–	20	10
200 361 32	2,420	3,130	58.6	–	20	10
200 361 33	2,580	3,290	60.5	–	20	10
200 361 34	2,740	3,450	62.4	–	20	10
200 361 35	2,900	3,610	64.3	–	20	10

With DIN drawbar eye Ø 40 for wheel brake 2361 (90/30)

Part no.	Dimension C in mm	Dimension A in mm				
200 361 36	980	1,690	41.5	–	20	10
200 361 37	1,140	1,850	43.4	–	20	10
200 361 38	1,300	2,010	45.3	–	20	10
200 361 39	1,460	2,170	47.2	–	20	10
200 361 40	1,620	2,330	49.1	–	20	10
200 361 41	1,780	2,490	51.0	–	20	10
200 361 42	1,940	2,650	52.9	–	20	10
200 361 43	2,100	2,810	54.8	–	20	10
200 361 44	2,260	2,970	56.7	–	20	10
200 361 45	2,420	3,130	58.6	–	20	10
200 361 46	2,580	3,290	60.5	–	20	10
200 361 47	2,740	3,450	62.4	–	20	10
200 361 48	2,900	3,610	64.3	–	20	10

SQUARE OVERRUN DEVICE

with drawbar section cranked 1,500 to 2,600 kg

TECHNOLOGY
Type 251 S - K26 vers. B
GA 1,500 to 2,600 kg
Perm. nose load 100 kg
Changeover relay lever:
☒ Yes ☐ No

ECE test report no.:
Overrun device: 361-0044-97
ECE type approval no.:
Drawbar installation: E1 55R-01 0268
Drawbar: E1 55R-01 0925

Max. free drawbar length with GA 2,600 kg:
1,650 mm

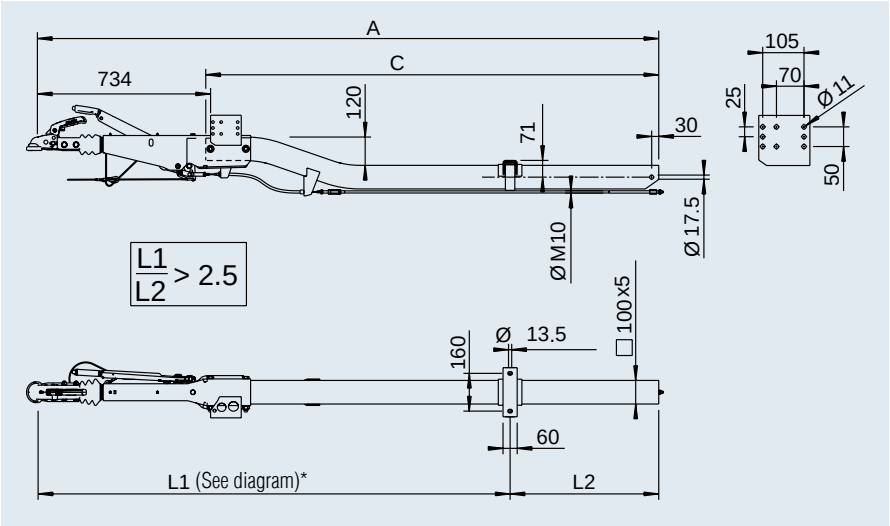

* Diagram see table of contents



SAP: AE KPL VKT 251S M ZUGVERBNDG K26/B

With coupling head AK 270 for wheel brake 1637 / 2051 (90/27)

Part no.	Dimension C in mm	Dimension A in mm				
200 630 01	1,280	1,990	53	–	20	10
1731022	1,440	2,150	55	–	20	10
200 630 02	1,600	2,310	57	–	20	10
200 630 03	1,760	2,470	59	–	20	10
200 630 04	1,920	2,630	61	–	20	10
200 630 05	2,080	2,790	63	–	20	10
200 630 06	2,240	2,950	65	–	20	10
200 630 07	2,400	3,110	67	–	20	10
200 630 08	2,560	3,270	69	–	20	10
200 630 09	2,720	3,430	71	–	20	10
200 630 10	2,880	3,590	73	–	20	10

With coupling head AK 270 for wheel brake 2361 (90/30)

Part no.	Dimension C in mm	Dimension A in mm				
200 631 01	1,280	1,990	53	–	20	10
200 631 02	1,440	2,150	55	–	20	10
200 631 03	1,600	2,310	57	–	20	10
200 631 04	1,760	2,470	59	–	20	10
200 631 05	1,920	2,630	61	–	20	10
200 631 06	2,080	2,790	63	–	20	10
200 631 07	2,240	2,950	65	–	20	10
200 631 08	2,400	3,110	67	–	20	10
200 631 09	2,560	3,270	69	–	20	10
200 631 10	2,720	3,430	71	–	20	10
200 631 11	2,880	3,590	73	–	20	10

With DIN drawbar eye Ø 40 for wheel brake 1637 / 2051 (90/27)

Part no.	Dimension C in mm	Dimension A in mm				
200 362 22	1,280	1,990	53	–	20	10
200 362 23	1,440	2,150	55	–	20	10
200 362 24	1,600	2,310	57	–	20	10
200 362 25	1,760	2,470	59	–	20	10
200 362 26	1,920	2,630	61	–	20	10
200 362 27	2,080	2,790	63	–	20	10
200 362 28	2,240	2,950	65	–	20	10
200 362 29	2,400	3,110	67	–	20	10
200 362 30	2,560	3,270	69	–	20	10
200 362 31	2,720	3,430	71	–	20	10
200 362 32	2,880	3,590	73	–	20	10

With DIN drawbar eye Ø 40 for wheel brake 2361 (90/30)

Part no.	Dimension C in mm	Dimension A in mm				
200 362 33	1,280	1,990	53	–	20	10
200 362 34	1,440	2,150	55	–	20	10
200 362 35	1,600	2,310	57	–	20	10
200 362 36	1,760	2,470	59	–	20	10
200 362 37	1,920	2,630	61	–	20	10
200 362 38	2,080	2,790	63	–	20	10
200 362 39	2,240	2,950	65	–	20	10
200 362 40	2,400	3,110	67	–	20	10
200 362 41	2,560	3,270	69	–	20	10
200 362 42	2,720	3,430	71	–	20	10
200 362 43	2,880	3,590	73	–	20	10

SQUARE OVERRUN DEVICE

with drawbar section straight 2,500 to 3,500 kg

TECHNOLOGY
Type 2.8 VB/1-C - R35 vers. B
GA 2,500 to 3,500 kg
Perm. nose load 150 kg
Changeover relay lever:
☐ Yes ☒ No

ECE test report no.:
Overrun device: 361-0045-97
ECE type approval no.:
Drawbar installation: E1 55R-01 0378
Drawbar: E1 55R-01 0762

Max. free drawbar length with GA 3500 kg:
1,820 mm

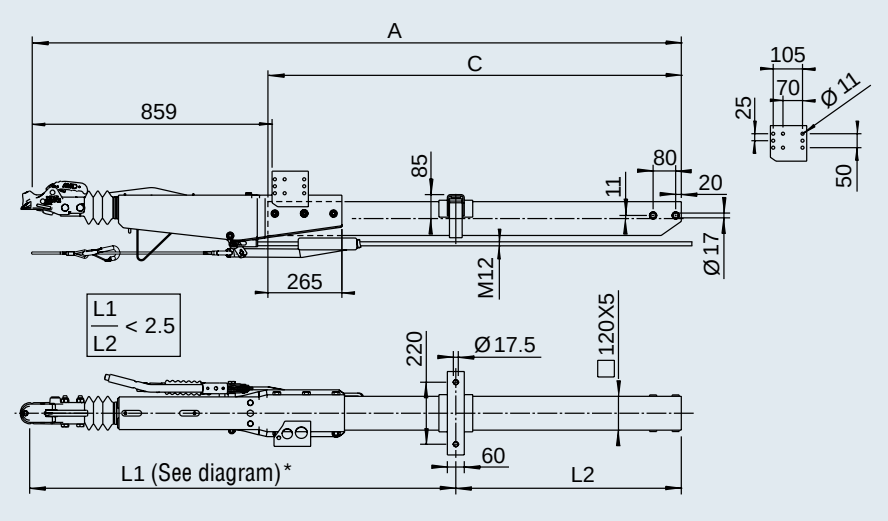

* Diagram see table of contents



SAP: AE KPL VKT 251S M ZUGVERBNDG K26/B

With coupling head AK 351 for wheel brake 2051 / 2361 (90/32)

Part no. 2051	Part no. 2361	Dimension C in mm	Dimension A in mm				
200 364 63	200 363 50	980	1,815	47.0	–	20	10
200 364 64	200 363 51	1,140	1,975	49.6	–	20	10
200 364 65	200 363 52	1,300	2,135	52.2	–	20	10
200 364 66	200 363 53	1,460	2,295	54.8	–	20	10
200 364 67	200 363 54	1,620	2,455	57.4	–	20	10
200 364 68	200 363 55	1,780	2,615	60.0	–	20	10
200 364 69	200 363 56	1,940	2,775	62.6	–	20	10
200 364 70	200 363 57	2,100	2,935	65.2	–	20	10
200 364 71	200 363 58	2,260	3,095	67.8	–	20	10
200 364 72	200 363 59	2,420	3,255	70.4	–	20	10
200 364 73	200 363 60	2,580	3,415	73.0	–	20	10
200 364 74	200 363 61	2,740	3,575	75.6	–	20	10
200 364 75	200 363 62	2,900	3,735	78.2	–	20	10

with coupling head AK 351 for wheel brake 3081

On request

SQUARE OVERRUN DEVICE

with drawbar section straight 2,500 to 3,500 kg without hitch component

TECHNOLOGY
Type 2.8 VB/1-C - R35 vers. B
GA 2,500 to 3,500 kg
Perm. nose load 150 kg
Changeover relay lever:
☐ Yes ☒ No

ECE test report no.:
Overrun device: 361-0045-97
ECE type approval no.:
Drawbar installation: E1 55R-01 0378
Drawbar: E1 55R-01 0762

Max. free drawbar length with GA 3500 kg:
1,820 mm

See table of contents
for appropriate drawbar eyes

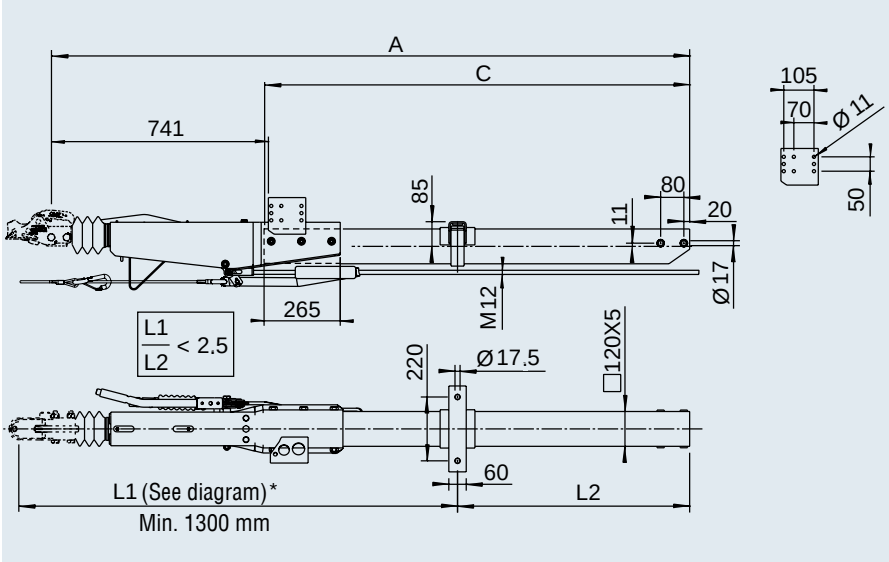

* Diagram see table of contents



SAP: AE VKT 2,8VB OHNE VKT 120 RB2051

without hitch component for wheel brake 2051 / 2361 (90/32)

Part no. 2051	Part no. 2361	Dimension C in mm	Dimension A in mm				
200 364 50	200 363 63	980	1700	45.4	–	20	10
200 364 51	200 363 64	1140	1860	48.0	–	20	10
200 364 52	200 363 65	1300	2020	50.6	–	20	10
200 364 53	200 363 66	1460	2180	53.2	–	20	10
200 364 54	200 363 67	1620	2340	55.8	–	20	10
200 364 55	200 363 68	1780	2500	58.4	–	20	10
200 364 56	200 363 69	1940	2660	61.0	–	20	10
200 364 57	200 363 70	2100	2820	63.6	–	20	10
200 364 58	200 363 71	2260	2980	66.2	–	20	10
200 364 59	200 363 72	2420	3140	68.8	–	20	10
200 364 60	200 363 73	2580	3300	71.4	–	20	10
200 364 61	200 363 74	2740	3460	74.0	–	20	10
200 364 62	200 363 75	2900	3620	76.6	–	20	10

SQUARE OVERRUN DEVICE

Sideways swivelling

YOUR ADVANTAGE

Pays for itself twice
Parking space is expensive. Sales vehicles, for instance, are therefore invoiced according to the occupied sales space. With the new AL-KO pivoting drawbar, you can not only reduce the trailer size by about 1.20 m, you can also save money on your stall fee or when transporting new vehicles.

Incredibly easy to operate
SURFACE TREATMENT
I Hot-dip galvanised



OPERATION OF THE PIVOTING DRAWBAR

Without significant effort, one person can pivot the drawbar.

Step 1: Move the vehicle to a safe standing position using the four corner steadies and raise the jockey wheel by turning.

Step 2: Open the pivot lock and pull out the plug. Pivot the drawbar either to the right or left.

Step 3: Insert the plug again and secure the drawbar to prevent it from pivoting back inadvertently.

Note: If the drawbar projects beyond the width of the trailer when pivoted, the projection will have to be marked (e.g. with a red flag).

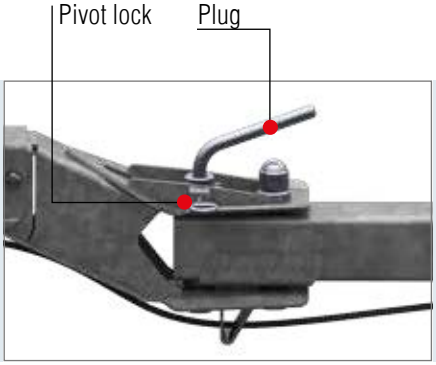



AL-KO TELESCOPIC HANDBRAKE LEVER

with lowering function for the weight range 2,700 to 3,500 kg

THE AL-KO TELESCOPIC HANDBRAKE LEVER

AL-KO PATENT

- **Flat design**
  For greater clearance between the lever and tailgate of a car
- **Precisely adjustable**
  A toothed segment with pushbutton has been dispensed with to make the handbrake easier to adjust. On a slope, this means the trailer can be braked and manoeuvred more precisely using the handbrake
- **Minimum hand force**
  The maximum possible lever length (140 mm) is available for releasing the handbrake, i.e. reduced hand force
- **Short design**
  When released, the handbrake lever is very short, giving greater clearance between the car and trailer
- **Ergonomic**
  The lever position, particularly when stationary forwards, is highly ergonomic, i.e. the user can apply his or her bodyweight to the lever, and releasing the handbrake is given noticeable additional support



Handbrake lever opened (driving)



Handbrake lever closed (parking brake forwards)



Handbrake lever closed (parking brake backwards, brake optimally set)

THE LOWERING FUNCTION

- **Lowering handbrake lever**
- **After the handbrake has been applied, the lever can be lowered**

CAUTION!
The lowered handbrake position could result in the incorrect conclusion that the handbrake has already been released.
For this reason, the future user will have to be specifically informed about this function on handover of the trailer.



Handbrake lever opened = brake rod not clamped

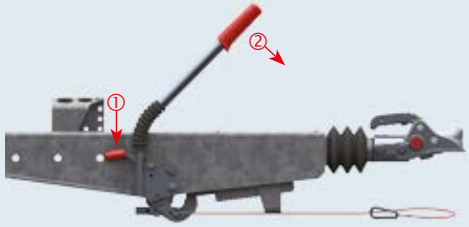

Handbrake lever applied = brake rod clamped
Press the locking lever ① and simultaneously lower the handbrake lever②



Handbrake lever applied = brake rod clamped, handbrake lever lowered

SQUARE OVERRUN DEVICE

with sideways swivelling drawbar section from 950 to 1,600 kg

TECHNOLOGY
Type 161 S - K 26-S
GA 950 to 1,600 kg
Perm. nose load 100 kg
Changeover relay lever:
☒ Yes ☐ No

ECE test report no.:
Overrun device: 361-0047-97
ECE type approval no.:
Drawbar installation: E1 55R-01-0267
Drawbar: E1 55R-01-1551

Max. free drawbar length: 1600 mm

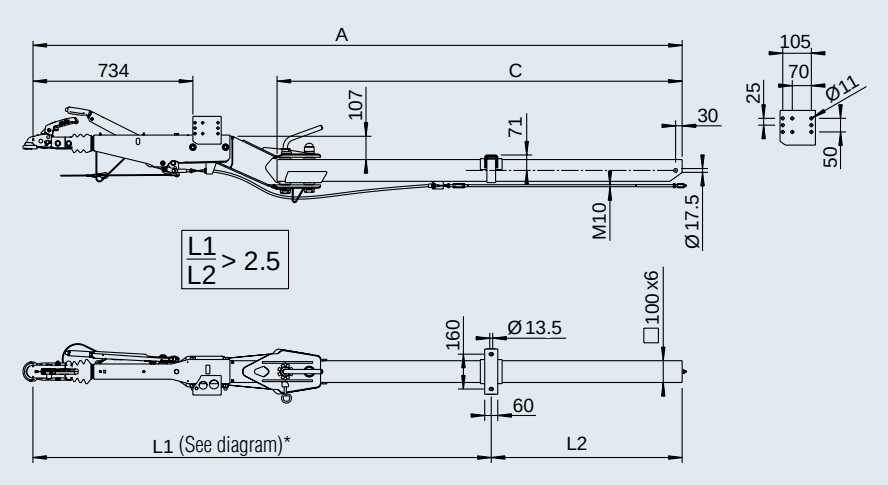

* Diagram see table of contents



SAP: AE KPL VKT 161S M SCHWENKDEICH K26-S

With coupling head AK 161 for wheel brake 1637 / 2051 (90/27)

Part no.	Dimension C in mm	Dimension A in mm				
200 632 01	1,150	2,410	65	–	20	10
200 632 02	1,230	2,490	67	–	20	10
200 632 03	1,310	2,570	69	–	20	10
200 632 04	1,390	2,650	71	–	20	10
200 632 05	1,470	2,730	73	–	20	10
200 632 06	1,550	2,810	75	–	20	10
200 632 07	1,630	2,890	77	–	20	10
200 632 08	1,710	2,970	79	–	20	10
200 632 09	1,790	3,050	81	–	20	10
200 632 10	1,870	3,130	83	–	20	10
200 632 11	1,950	3,210	85	–	20	10
200 632 12	2,030	3,290	87	–	20	10
200 632 13	2,110	3,370	89	–	20	10
200 632 14	2,190	3,450	91	–	20	10
200 632 15	2,270	3,530	93	–	20	10
200 632 16	2,350	3,610	95	–	20	10
200 632 17	2,430	3,690	97	–	20	10
200 632 18	2,510	3,770	99	–	20	10
200 632 19	2,590	3,850	101	–	20	10
200 632 20	2,670	3,930	103	–	20	10
200 632 21	2,750	4,010	105	–	20	10

With coupling head AK 161 for wheel brake 2361 (90/30)

Part no.	Dimension C in mm	Dimension A in mm				
200 633 01	1,150	2,410	65	–	20	10
200 633 02	1,230	2,490	67	–	20	10
200 633 03	1,310	2,570	69	–	20	10
200 633 04	1,390	2,650	71	–	20	10
200 633 05	1,470	2,730	73	–	20	10
200 633 06	1,550	2,810	75	–	20	10
200 633 07	1,630	2,890	77	–	20	10
200 633 08	1,710	2,970	79	–	20	10
200 633 09	1,790	3,050	81	–	20	10
200 633 10	1,870	3,130	83	–	20	10
200 633 11	1,950	3,210	85	–	20	10
200 633 12	2,030	3,290	87	–	20	10
200 633 13	2,110	3,370	89	–	20	10
200 633 14	2,190	3,450	91	–	20	10
200 633 15	2,270	3,530	93	–	20	10
200 633 16	2,350	3,610	95	–	20	10
200 633 17	2,430	3,690	97	–	20	10
200 633 18	2,510	3,770	99	–	20	10
200 633 19	2,590	3,850	101	–	20	10
200 633 20	2,670	3,930	103	–	20	10
200 633 21	2,750	4,010	105	–	20	10

With DIN drawbar eye Ø 40 for wheel brake 2051 (90/27)

On request

With DIN drawbar eye Ø 40 for wheel brake 2361 (90/30)

On request

SQUARE OVERRUN DEVICE

with sideways swivelling drawbar section from 1,500 to 2,600 kg

TECHNOLOGY
Type 251 S - K 26-S
GA 1,500 to 2,600 kg
Perm. nose load 100 kg
Changeover relay lever:
☒ Yes ☐ No

ECE test report no.:
Overrun device: 361-0044-97
ECE type approval no.:
Drawbar installation: E1 55R-01-0268
Drawbar: E1 55R-01-1551

Max. free drawbar length: 1,600 mm

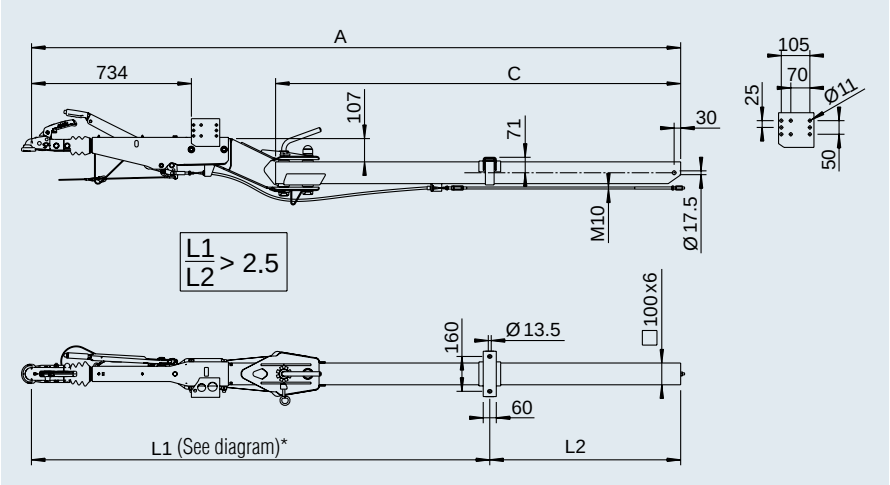

* Diagram see table of contents



SAP: AE KPL VKT 251S M SCHWENKDEICH K26-S

With coupling head AK 161 for wheel brake 1637 / 2051 (90/27)

Part no.	Dimension C in mm	Dimension A in mm				
200 636 01	1150	2410	70	–	20	10
200 636 02	1230	2490	72	–	20	10
200 636 03	1310	2570	74	–	20	10
200 636 04	1390	2650	76	–	20	10
200 636 05	1470	2730	78	–	20	10
200 636 06	1550	2810	80	–	20	10
200 636 07	1630	2890	82	–	20	10
200 636 08	1710	2970	84	–	20	10
200 636 09	1790	3050	86	–	20	10
200 636 10	1870	3130	88	–	20	10
200 636 11	1950	3210	90	–	20	10
200 636 12	2030	3290	92	–	20	10
200 636 13	2110	3370	94	–	20	10
200 636 14	2190	3450	96	–	20	10
200 636 15	2270	3530	98	–	20	10
200 636 16	2350	3610	100	–	20	10
200 636 17	2430	3690	102	–	20	10
200 636 18	2510	3770	104	–	20	10
200 636 19	2590	3850	106	–	20	10
200 636 20	2670	3930	108	–	20	10
200 636 21	2750	4010	110	–	20	10

With coupling head AK 161 for wheel brake 2361 (90/30)

Part no.	Dimension C in mm	Dimension A in mm				
200 637 01	1150	2410	70	–	20	10
200 637 02	1230	2490	72	–	20	10
200 637 03	1310	2570	74	–	20	10
200 637 04	1390	2650	76	–	20	10
200 637 05	1470	2730	78	–	20	10
200 637 06	1550	2810	80	–	20	10
200 637 07	1630	2890	82	–	20	10
200 637 08	1710	2970	84	–	20	10
200 637 09	1790	3050	86	–	20	10
200 637 10	1870	3130	88	–	20	10
200 637 11	1950	3210	90	–	20	10
200 637 12	2030	3290	92	–	20	10
200 637 13	2110	3370	94	–	20	10
200 637 14	2190	3450	96	–	20	10
200 637 15	2270	3530	98	–	20	10
200 637 16	2350	3610	100	–	20	10
200 637 17	2430	3690	102	–	20	10
200 637 18	2510	3770	104	–	20	10
200 637 19	2590	3850	106	–	20	10
200 637 20	2670	3930	108	–	20	10
200 637 21	2750	4010	110	–	20	10

With DIN drawbar eye Ø 40 for wheel brake 2051 (90/27)

On request

With DIN drawbar eye Ø 40 for wheel brake 2361 (90/30)

On request

SQUARE OVERRUN DEVICE

with side-swivelling drawbar section from 2,500 to 3,500 kg

TECHNOLOGY
Type 2.8 VB/1-C - K35-S
GA 2,500 to 3,500 kg
Perm. nose load 150 kg
Changeover relay lever:
☐ Yes ☒ No

ECE test report no.:
Overrun device: 361-0045-97
ECE type approval no.:
Drawbar installation: E1 55R-01 0378
Drawbar: E1 55R-01 2415

Max. free drawbar length with GA 3,500 kg: 2,000 mm

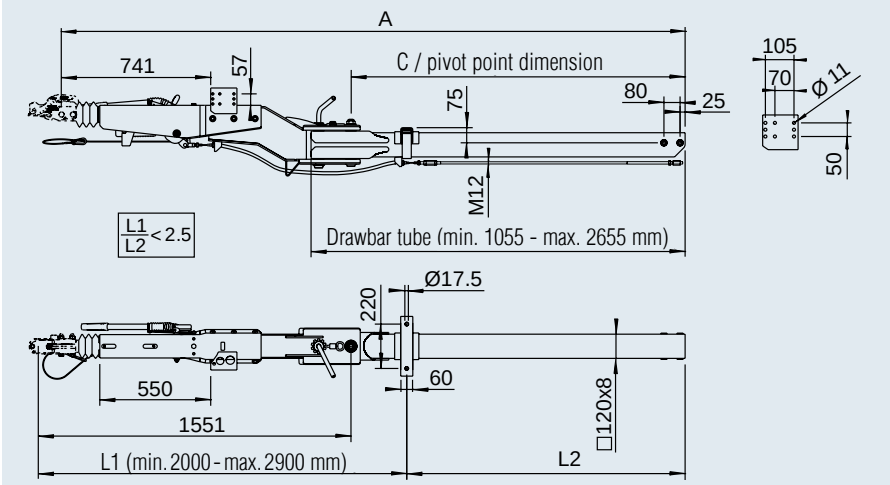

3

See table of contents for appropriate hitches and drawbar eyes



SAP: AE VKT 2,8VB M SCHWENKDEICH K35-S

Without hitch component for								
Wheel brakes 2051 (90/30)	Wheel brakes 2361 (90/32)	Wheel brakes 3062/3081 (90/35.5)	Dimension					
Part no.	Part no.	Part no.	C in mm	A in mm				
200 573 22	200 573 01	200 573 43	857	2,410	118	–	20	10
200 573 23	200 573 02	200 573 44	937	2,490	120	–	20	10
200 573 24	200 573 03	200 573 45	1,017	2,570	122	–	20	10
200 573 25	200 573 04	200 573 46	1,097	2,650	125	–	20	10
200 573 26	200 573 05	200 573 47	1,177	2,730	127	–	20	10
200 573 27	200 573 06	200 573 48	1,257	2,810	129	–	20	10
200 573 28	200 573 07	200 573 49	1,337	2,890	131	–	20	10
200 573 29	200 573 08	200 573 50	1,417	2,970	133	–	20	10
200 573 30	200 573 09	200 573 51	1,497	3,050	136	–	20	10
200 573 31	200 573 10	200 573 52	1,577	3,130	138	–	20	10
200 573 32	200 573 11	200 573 53	1,657	3,210	140	–	20	10
200 573 33	200 573 12	200 573 54	1,737	3,290	142	–	20	10
200 573 34	200 573 13	200 573 55	1,817	3,370	144	–	20	10
200 573 35	200 573 14	200 573 56	1,897	3,450	147	–	20	10
200 573 36	200 573 15	200 573 57	1,977	3,530	149	–	20	10
200 573 37	200 573 16	200 573 58	2,057	3,610	151	–	20	10
200 573 38	200 573 17	200 573 59	2,137	3,690	153	–	20	10
200 573 39	200 573 18	200 573 60	2,217	3,770	155	–	20	10
200 573 40	200 573 19	200 573 61	2,297	3,850	158	–	20	10
200 573 41	200 573 20	200 573 62	2,377	3,930	160	–	20	10
200 573 42	200 573 21	200 573 63	2,457	4,010	162	–	20	10

SQUARE OVERRUN DEVICE

with removable drawbar section



YOUR ADVANTAGE

Sales vehicles are charged according to the space they take up. By removing the overrun device, the trailer length can be reduced by up to 1.20 m.
You save sales space and reduce your stall fees.

OPERATION

Step 1
Move the vehicle to a safe standing position using the four corner steadies and raise the jockey wheel by turning.



Step 2 (2 people required)
Remove the safety plug and release the t-bar. The bearing screw can now be knocked out by one person, while the second person secures the overrun device to prevent it from falling down.



Step 3
The overrun device can now be pivoted sideways under the vehicle.



SQUARE OVERRUN DEVICE

with removable drawbar section from 950 to 1,600 kg

TECHNOLOGY
Type 161 S - ZE 252R
GA 950 to 1,600 kg
Perm. nose load 100 kg
Changeover relay lever:
☒ Yes ☐ No

ECE test report no.:
Overrun device 161S: 361-0047-97
ECE type approval no.:
Drawbar installation 161K: E1 55R-01 0267
Drawbar installation 252R: E1 55R-01 0536

Max. free drawbar length with GA 1,600 kg:
1,640 mm

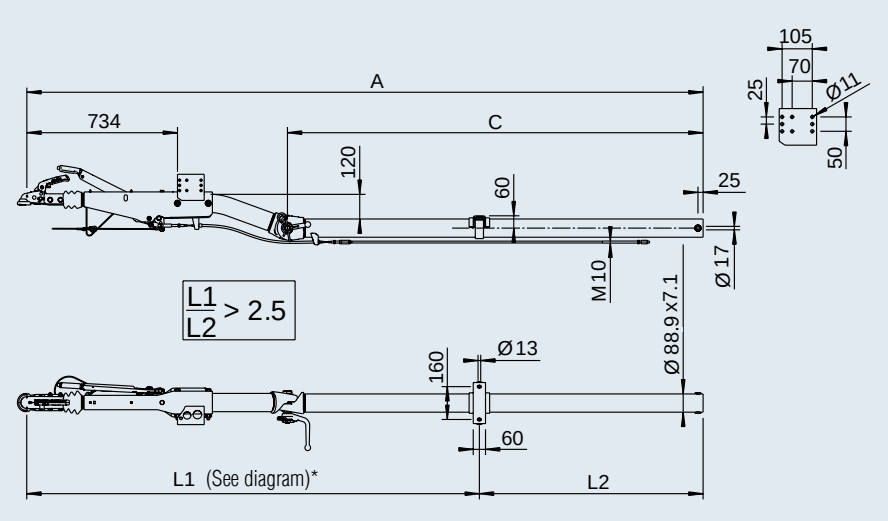

* Diagram see table of contents



SAP: AE KPL 161S VKT M ZUGEINRICHTUNG 252R

With coupling head AK 161 for wheel brake 1637 / 2051 (90/27)

Part no.	Dimension C in mm	Dimension A in mm				
200 634 01	820	2,155	71	–	20	20
200 634 02	980	2,315	75	–	20	20
200 634 03	1,140	2,475	79	–	20	20
200 634 04	1,300	2,635	83	–	20	20
200 634 05	1,460	2,795	87	–	20	20
200 634 06	1,620	2,955	91	–	20	20
200 634 07	1,780	3,115	95	–	20	20
200 634 08	1,940	3,275	99	–	20	20
200 634 09	2,100	3,435	103	–	20	20
200 634 10	2,260	3,595	107	–	20	20
200 634 11	2,420	3,755	111	–	20	20

With coupling head AK 161 for wheel brake 2361 (90/30)

Part no.	Dimension C in mm	Dimension A in mm				
200 635 01	820	2,155	71	–	20	20
200 635 02	980	2,315	75	–	20	20
200 635 03	1,140	2,475	79	–	20	20
200 635 04	1,300	2,635	83	–	20	20
200 635 05	1,460	2,795	87	–	20	20
200 635 06	1,620	2,955	91	–	20	20
200 635 07	1,780	3,115	95	–	20	20
200 635 08	1,940	3,275	99	–	20	20
200 635 09	2,100	3,435	103	–	20	20
200 635 10	2,260	3,595	107	–	20	20
200 635 11	2,420	3,755	111	–	20	20

SQUARE OVERRUN DEVICE

with removable drawbar section from 1,500 to 2,600 kg

TECHNOLOGY
Type 251 S - ZE 252R
GA 1,500 to 2,600 kg
Perm. nose load 100 kg
Changeover relay lever:
☒ Yes ☐ No

ECE test report no.:
Overrun device 251S: 361-0044-97
ECE type approval no.:
Drawbar installation 251K: E1 55R-01 0268
Drawbar installation 252R: E1 55R-01 0536

Max. free drawbar length Min. 1,440 mm
With GA 2,600 kg: Max. 1,480 mm

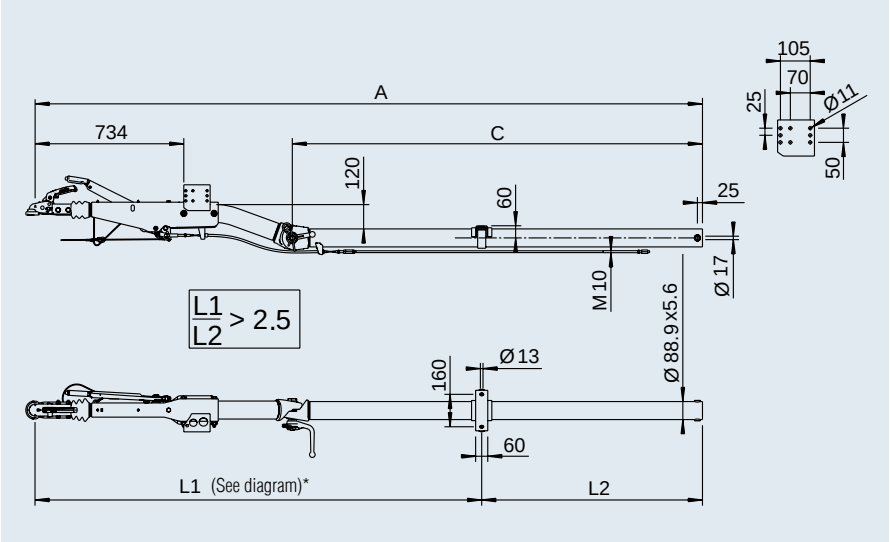

* Diagram see table of contents

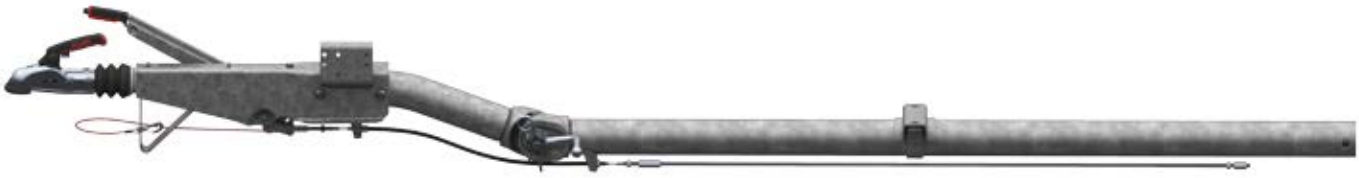

SAP: AE KPL 251S VKT M ZUGEINRICHTUNG 252R

With coupling head AK 270 for wheel brake 2051 (90/27)

Part no.	Dimension C in mm	Dimension A in mm				
200 638 01	820	2,155	74.4	–	20	20
200 638 02	980	2,315	78.4	–	20	20
200 638 03	1,140	2,475	82.4	–	20	20
200 638 04	1,300	2,635	86.4	–	20	20
200 638 05	1,460	2,795	90.4	–	20	20
200 638 06	1,620	2,955	94.4	–	20	20
200 638 07	1,780	3,115	98.4	–	20	20
200 638 08	1,940	3,275	102.4	–	20	20
200 638 09	2,100	3,435	106.4	–	20	20
200 638 10	2,260	3,595	110.4	–	20	20
200 638 11	2,420	3,755	114.4	–	20	20

With coupling head AK 270 for wheel brake 2361 (90/30)

Part no.	Dimension C in mm	Dimension A in mm				
200 639 01	820	2,155	74.4	–	20	20
200 639 02	980	2,315	78.4	–	20	20
200 639 03	1,140	2,475	82.4	–	20	20
200 639 04	1,300	2,635	86.4	–	20	20
200 639 05	1,460	2,795	90.4	–	20	20
200 639 06	1,620	2,955	94.4	–	20	20
200 639 07	1,780	3,115	98.4	–	20	20
200 639 08	1,940	3,275	102.4	–	20	20
200 639 09	2,100	3,435	106.4	–	20	20
200 639 10	2,260	3,595	110.4	–	20	20
200 639 11	2,420	3,755	114.4	–	20	20

OVERRUN DEVICE SQUARE – DIAGRAMS

for determining the maximum possible free drawbar length

Straight version

Diagram type R4 vers. B3
Square 60 x 60 x 4

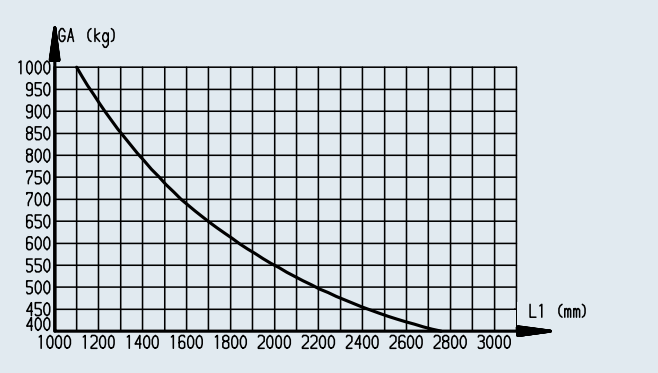

Diagram type R16 vers. A
Square 70 x 70 x 4

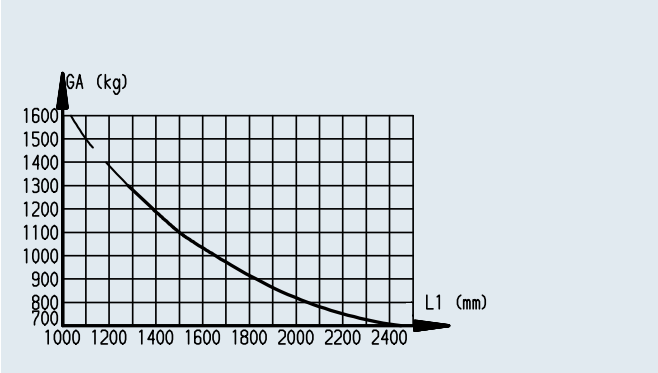

Diagram type R26 vers. A
Square 100 x 100 x 4

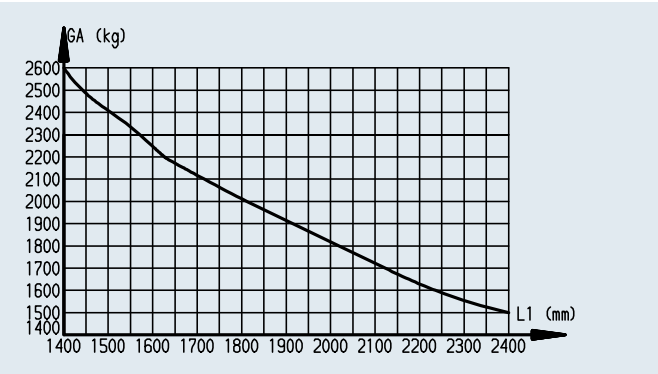

Diagram type R35 vers. B
Square 120 x 120 x 5

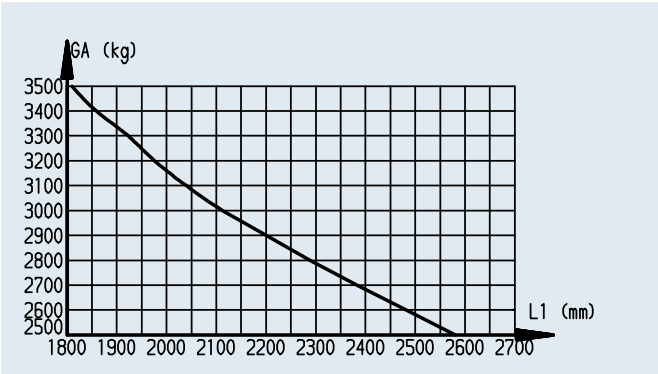

Cranked version

Diagram type K16
Square 70 x 70 x 5

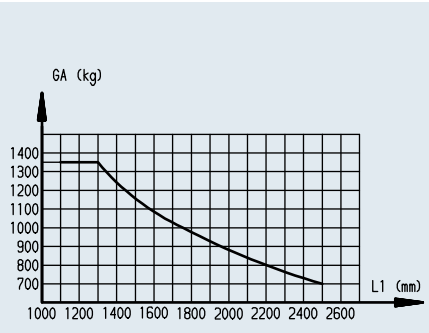

Diagram type K26 vers. A
Square 100 x 100 x 4

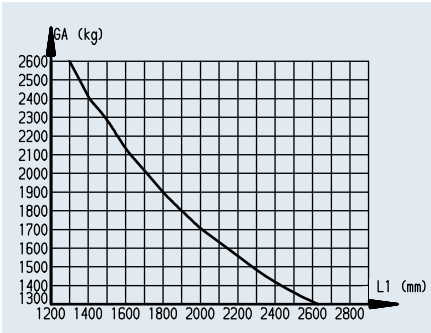

Diagram type K26 vers. B
Square 100 x 100 x 5

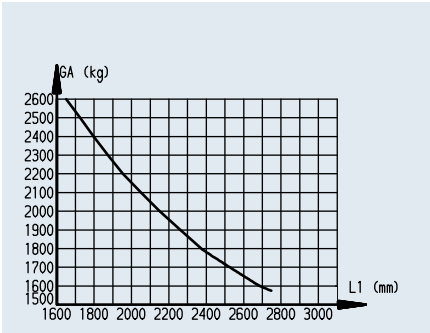

ACCESSORIES FOR OVERRUN DEVICE SQUARE

Clamping mounts for clamping

SCOPE OF DELIVERY

- Clamping mount with clamping bracket without fixing bolts

SURFACE TREATMENT

- Hot-dip galvanised



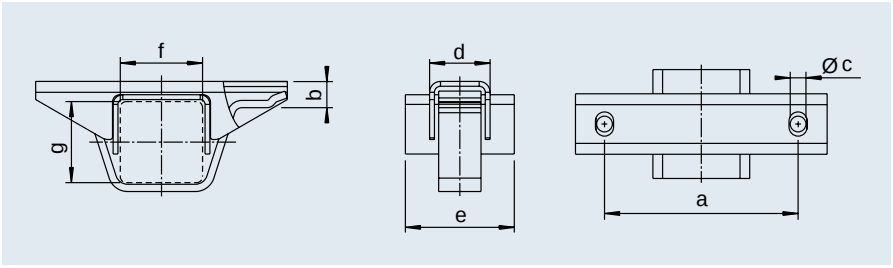

Part no.	SAP	for drawbar tube see diagram dimension f and g in mm	Dimension a mm	Dimension b mm	Dimension c mm	Dimension d mm	Dimension e mm				
249 317	AUFLAGEBOCK VKT60 M BÜGEL	60 x 60	160	15	13	50	–	0.9	–	350	2
247 657	AUFLAGEBOCK VKT 70	70 x 70	160	15	13	50	90	1.1	–	350	2
247 638	AUFLAGEBOCK VKT100	100 x 100	160	21	13	60	100	1.6	–	350	2
1 210 475	AUFLAGEBOCK VKT120 FEUERVZ	120 x 120	220	25	17	60	120	1.8	–	350	2



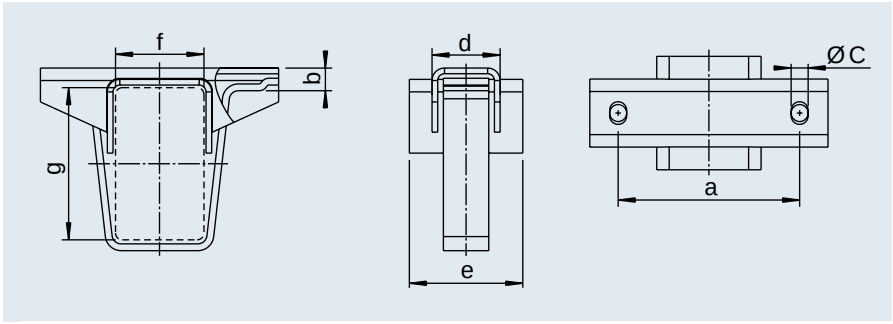

Part no.	SAP	for drawbar tube see diagram dimension f and g in mm	Dimension a mm	Dimension b mm	Dimension c mm	Dimension d mm	Dimension e mm				
1 211 104	AUFLAGEBOCK PR 70X140M BÜGEL FEUERVZ	70 x 140	160	15	15	50	90	1.5	–	150	2
1 210 617	AUFLAGEBOCK PR 80X140M BÜGEL FEUERVZ	80 x 140	160	15	15	60	100	1.6	–	150	2
1 211 105	AUFLAGEBOCK PR100X160M BÜGEL FEUERVZ	100 x 160	200	25	17	60	120	1.8	–	150	2
1 211 106	AUFLAGEBOCK PR120X160M BÜGEL FEUERVZ	120 x 160	220	25	17	60	120	2.0	–	150	2

OVERRUN DEVICES V

Product lines / differences / applications



Product line	BASIC ★
Product name	Overrun device V BASIC
Overrun device housing	Steel
Design	Classic
Top and bottom installation in one variant	No
Mounting of the pull bar	Plastic slide bearing with normal play
Changeover relay lever	Yes, see catalogue for types
Coupling head with protection against unsuccessful locking	Yes, as standard
Coupling head with hitching indicator	Yes, as standard
Coupling head with wear indicator	Yes, as standard
Coupling head with flat hand grip	Yes, as standard
Handbrake lever released (hitched condition) very flat	No
Handbrake lever without pushbutton, i.e. easy to dose	No
Handbrake lever manual force on releasing	Medium
Handbrake lever clearance from the jockey wheel crank and hitch handle	Satisfactory
Handbrake lever ergonomics, operation	Good, pushbutton actuation necessary, steeper lever position
Breakaway cable guide on the overrun device	Yes, as standard or accessories
Optional manoeuvring handle	Yes, up to 3 t, as accessories
Optional skid bracket	Yes, accessories
Optional clamp can be mounted at the side	Yes, accessories
Optional jockey wheel flange at the rear	Yes, see catalogue for types
Optional plug-in drawbar eyes	No
Optional lock on the coupling head, "lock"	Yes, accessories
Optional lock on the coupling head, "box lock"	Yes, accessories
Optional lock on the hitch "Safety cover tested by insurance companies in SW, NL, UK"	No, but in preparation

Overrun devices are required for diverse trailer types and application areas. Each application area has individual requirements in terms of benefit and price.

With our clear overrun device product differentiation, we offer the optimal solution for each purpose: This also enables you to clearly differentiate your products with optimal value creation.



PLUS ★ ★



PREMIUM PROFI ★ ★ ★

Overrun device V PLUS	Overrun device V PREMIUM PROFI
Steel	High-quality cast iron
Modern	Modern
Yes	Yes
Plastic slide bearing with reduced play	Low-wear grey cast iron mounting with minimal play
Yes, see catalogue for types	No
Yes, as standard	Yes, as standard
Yes, as standard	Yes, as standard
Yes, as standard	Yes, as standard
Yes, as standard	Yes, as standard
Yes	Yes
Yes	Yes
Low	Very low, telescopic lever
Good	Excellent
Very good, no pushbutton, flatter lever position, large, soft hand grip	Very good, no pushbutton, flatter lever position, large, soft hand grip
Yes, as standard	Yes, as standard
Yes, up to 3 t, as accessories	Yes, accessories
Yes, as standard, also additionally as accessories	Yes, accessories
Yes, accessories	Yes, accessories
Yes, see catalogue for types	Yes, see catalogue for types
Yes, see catalogue for types (not with 251 G)	Yes, see catalogue for types
Yes, accessories	Yes, accessories
Yes, accessories	Yes, accessories
No, but in preparation	No

Market launch approx. 06/2018

OVERRUN DEVICE V

450 to 1,600 kg

SAP: AE KPL V OB 60S/2 AK161 GASF

AE V 60S/2 and 90S/3 with AK 161 and Soft-Dock

Part no.	Type	Gross weight in kg	Nose load in kg	Drawbar installation version	Change-over relay lever?	Can be combined with AL-KO wheel brake	Hitch mounted				
1 251 910	60S/2	450 – 750	75	top	No	1636G / 1637	AK 161	9	–	50	2
1 251 911	90S/3	700 – 1,000	75	top	No	1636G / 1637 / 2051	AK 161	9	–	50	2

AE V 60S/2 ECE test report no.

Overrun device: 361-0126-97

AE V 90S/3 ECE test report no.

Overrun device: 361-033-92

ECE type approval no.

Drawbar installation: E1 55R-01 0225

ECE type approval no.

Drawbar installation: E1 55R-01 0226



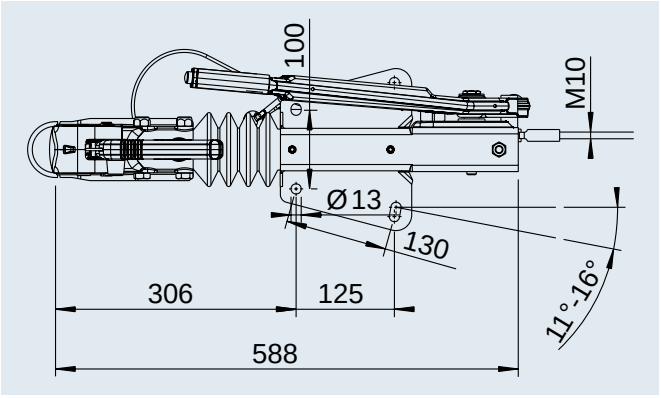

SAP: AE KPL V OB 161S AK161 GASF

AE V 161S with AK 161 and Soft-Dock

Part no.	Type	Gross weight in kg	Nose load in kg	Drawbar installation version	Change-over relay lever?	Can be combined with AL-KO wheel brake	Hitch mounted				
1 253 068	161 S	700 – 1,350	100	top	No	1637 / 2051	AK 161	12	–	40	20
1 251 912	161 S	950 – 1,600	100	top	No	1637 / 2051	AK 161	12	–	40	2
1 251 913	161 S	950 – 1,600	100	top	No	2361	AK 161	12	–	40	2

ECE test report no.
Overrun device: 361-0047-97

ECE type approval no.
Drawbar installation: E1 55R-01 0229



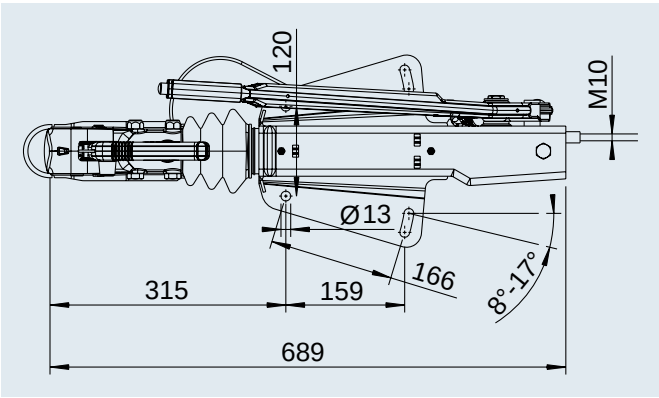

OVERRUN DEVICE V

950 to 1,600 kg

SAP: AE KPL V UN 161S AK161 GASF

AE V 161S with AK 161 and Soft-Dock

Part no.	Type	Gross weight in kg	Nose load in kg	Drawbar installation version	Change-over relay lever?	Can be combined with AL-KO wheel brake	Hitch mounted				
1 251 914	161 S	950 – 1,600	100	bottom	No	1637 / 2051	AK 161	12	–	20	2
1 251 915	161 S	950 – 1,600	100	bottom	No	2361	AK 161	12	–	20	2



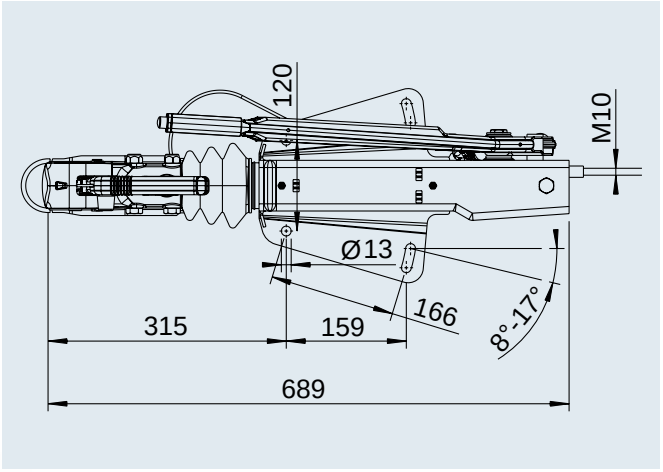

SAP: AE KPL V OB 161S DINÖSE GASF

AE V 161S with DIN eye

Part no.	Type	Gross weight in kg	Nose load in kg	Drawbar installation version	Change-over relay lever?	Can be combined with AL-KO wheel brake	Hitch mounted				
299 319	161 S	950 – 1,600	100	top	No	1637 / 2051	DIN eye	14	–	40	2
242 935	161 S	950 – 1,600	100	top	No	2361	DIN eye	14	–	40	2



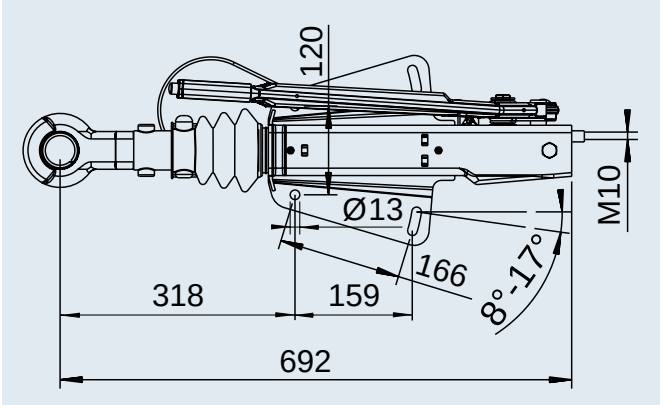

OVERRUN DEVICE V

1,500 to 2,700 kg

SAP: AE KPL V OB 251S AK270 GASF

AE V 251S with AK 270 and Soft-Dock

Part no.	Type	Gross weight in kg	Nose load in kg	Drawbar installation version	Change-over relay lever?	Can be combined with AL-KO wheel brake	Hitch mounted				
1 251 916	251S	1,500 – 2,700	120	top	Yes	1637 / 2051	AK 270	14	–	40	2
1 251 917	251S	1,500 – 2,700	120	top	Yes	2361	AK 270	14	–	40	20
1 251 918	251S	1,500 – 2,700	120	top	Yes	3062 / 3081	AK 270	14	–	40	20



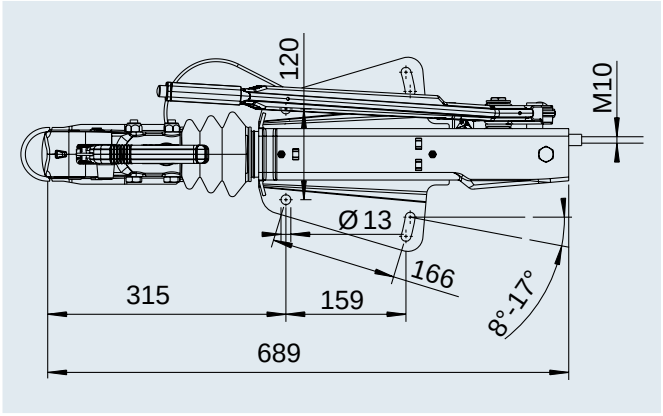

SAP: AE KPL V UN 251S AK270 GASF

AE V 251S with AK 270 and Soft-Dock

Part no.	Type	Gross weight in kg	Nose load in kg	Drawbar installation version	Change-over relay lever?	Can be combined with AL-KO wheel brake	Hitch mounted				
1 251 919	251S	1,500 – 2,700	120	bottom	Yes	1637 / 2051	AK 270	14	–	40	2
1 251 920	251S	1,500 – 2,700	120	bottom	Yes	2361	AK 270	14	–	40	20
1 251 921	251S	1,500 – 2,700	120	bottom	Yes	3062 / 3081	AK 270	14	–	40	20



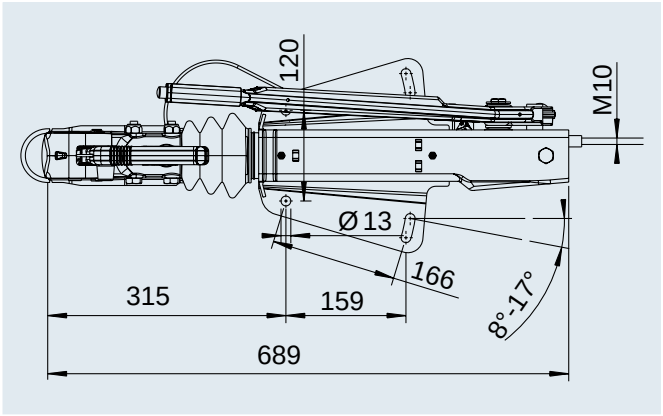

OVERRUN DEVICE V

1,500 to 2,700 kg

SAP: AE KPL V OB 251S DINÖSE GASF

AE V 251S with DIN eye

Part no.	Type	Gross weight in kg	Nose load in kg	Drawbar installation version	Change-over relay lever?	Can be combined with AL-KO wheel brake	Hitch mounted				
240 007	251S	1,500 – 2,700	120	top	Yes	1637 / 2051	DIN eye	16	–	40	2
242 942	251S	1,500 – 2,700	120	top	Yes	2361	DIN eye	16	–	40	20
242 938	251S	1,500 – 2,700	120	top	Yes	3062 / 3081	DIN eye	16	–	40	20

ECE test report no.

Overrun device: 361-0044-97

ECE type approval no.

Drawbar installation: E1 55R-01 0227



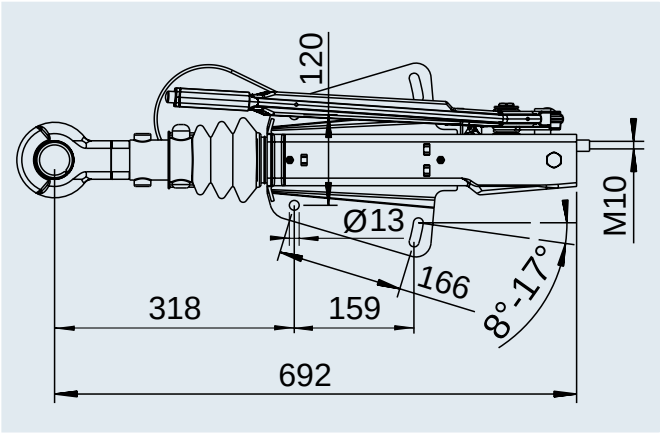

OVERRUN DEVICE V

1,550 to 3,000 kg

SAP: AE KPL V ST OB 251G AK301 GASF

AE V 251G steel with PROFI V AK 301

Part no.	Type	Gross weight in kg	Nose load in kg	Drawbar installation version	Change-over relay lever?	Can be combined with AL-KO wheel brake	Hitch mounted				
1 251 097	251G steel	1,550 – 3,000	120	top	No	1637 / 2051	AK 301	17	–	40	2
1 251 600	251G steel	1,550 – 3,000	120	top	No	2361	AK 301	17	–	40	20
1 251 601	251G steel	1,550 – 3,000	120	top	No	3062 / 3081	AK 301	17	–	40	20

ECE test report no.
Overrun device: 361-0043-97

ECE type approval no.
Drawbar installation: E1 55R-01 0466



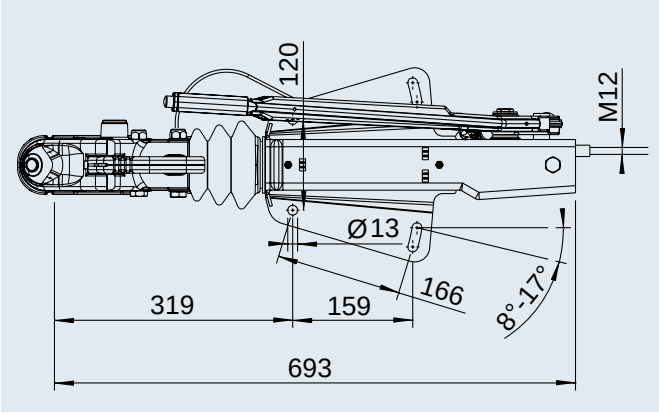

OVERRUN DEVICE V

1,550 to 3,000 kg

SAP: AE KPL V ST UN 251G AK301 GASF

AE V 251G steel with PROFI V AK 301

Part no.	Type	Gross weight in kg	Nose load in kg	Drawbar installation version	Change-over relay lever?	Can be combined with AL-KO wheel brake	Hitch mounted				
1 251 288	251G steel	1,550 – 3,000	120	bottom	No	1637 / 2051	AK 301	17	–	40	20

ECE test report no.
Overrun device: 361-0043-97

ECE type approval no.
Drawbar installation: E1 55R-01 0466



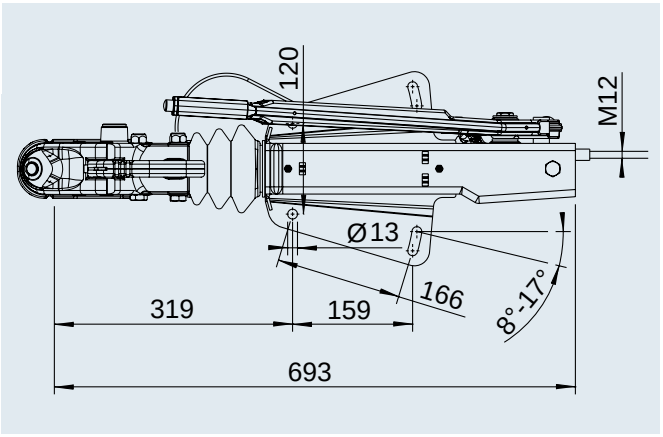

SAP: AE KPL V ST OB 251G DINÖSE GASF

AE V 251G steel with DIN eye

Part no.	Type	Gross weight in kg	Nose load in kg	Drawbar installation version	Change-over relay lever?	Can be combined with AL-KO wheel brake	Hitch mounted				
249 250	251G steel	1,550 – 3,000	120	top	No	1637 / 2051	DIN eye	18	–	40	20

ECE test report no.
Overrun device: 361-0043-97

ECE type approval no.
Drawbar installation: E1 55R-01 0466



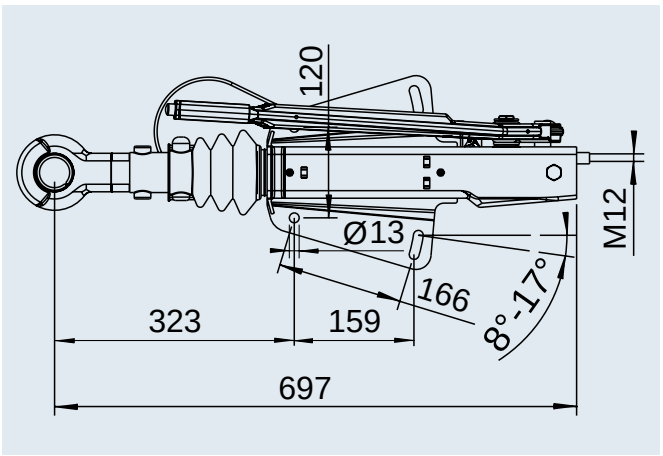

OVERRUN DEVICE V

with elevated centre flange welded on 1,500 to 2,700 kg

SAP: AE KPL V ST OB 251S AK270 GASF

AE V 251S with AK 270 and Soft-Dock, 1,500 – 2,700 kg

Part no.	Type	Gross weight in kg	Nose load in kg	Drawbar installation version	Change-over relay lever?	Can be combined with AL-KO wheel brake	Hitch mounted				
1 251 922	251S	1,500 – 2,700	100	top	Yes	1637 / 2051	AK 270	18	–	35	2
1 251 923	251S	1,500 – 2,700	100	bottom	Yes	1637 / 2051	AK 270	18	–	35	20
1 251 924	251S	1,500 – 2,700	100	top	Yes	2361	AK 270	18	–	35	20
1 251 925	251S	1,500 – 2,700	100	bottom	Yes	2361	AK 270	18	–	35	20
1 251 926	251S	1,500 – 2,700	100	top	Yes	3062 / 3081	AK 270	18	–	35	20
1 251 927	251S	1,500 – 2,700	100	bottom	Yes	3062 / 3081	AK 270	18	–	35	20

ECE test report no.

Overrun device: 361-0044-97

ECE type approval no.

Drawbar installation: E1 55R-01 0227



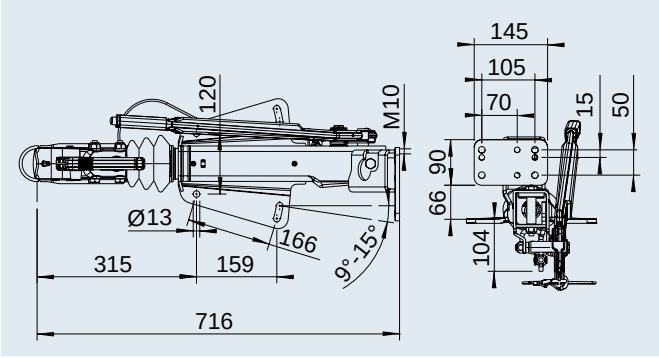

OVERRUN DEVICE V

with elevated centre flange welded on 1,550 to 3,000 kg

SAP: AE KPL V ST OB 251G AK301 GASF

AE V 251G with PROFI V AK 301

Part no.	Type	Gross weight in kg	Nose load in kg	Drawbar installation version	Change-over relay lever?	Can be combined with AL-KO wheel brake	Hitch mounted				
1 251 500	251G	1,550 – 3,000	120	top	No	1637 / 2051	AK 301	20	–	20	2
1 251 602	251G	1,550 – 3,000	120	top	No	2361	AK 301	20	–	20	20
1 251 603	251G	1,550 – 3,000	120	top	No	3062 / 3081	AK 301	20	–	20	20

ECE test report no.
Overrun device: 361-0043-97

ECE type approval no.
Drawbar installation: E1 55R-01 0466



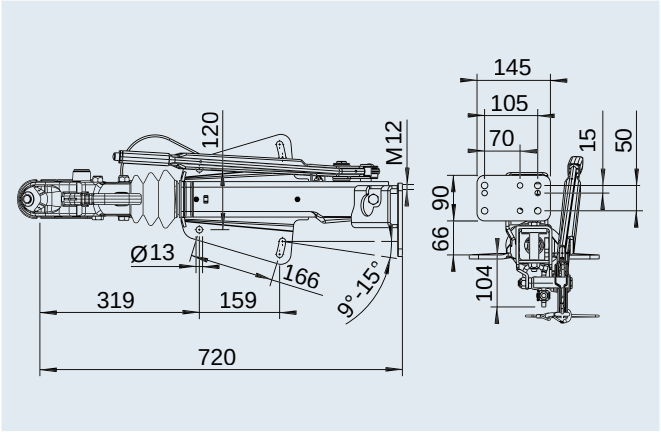

OVERRUN DEVICE V

2,500 to 3500 kg

SAP: AE KPL V OB 2,8VB/1 AK351 GASF 3500

AE V 2.8 VB with coupling head AK 351

Part no.	Type	Gross weight in kg	Nose load in kg	Installation	Change-over relay lever?	Can be combined with AL-KO wheel brake	Hitch mounted				
1 251 875	2.8VB1/-C	2,500 – 3,500	150	top and bottom	No	2051	AK 351	33	–	10	20
1 251 555	2.8VB1/-C	2,500 – 3,500	150	top and bottom	No	2361	AK 351	33	–	10	2
1 251 565	2.8VB1/-C	2,500 – 3,500	150	top and bottom	No	3062 / 3081	AK 351	33	–	10	2

ECE test report no.	ECE type approval no.
Overrun device: 361-0045-97	Drawbar installation: E1 55R-01 0384



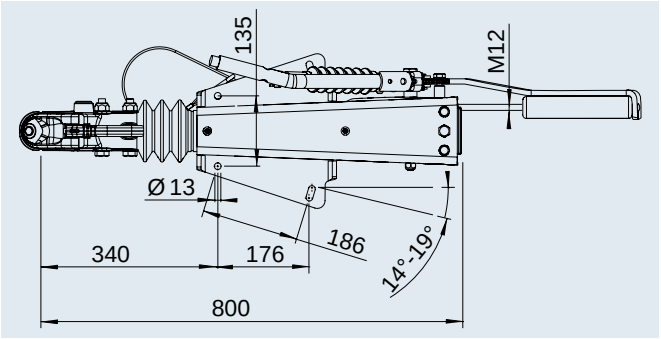

SAP: AE KPL V OB 2,8VB/1 OHNE KUPP 3500

AE V 2.8 VB without hitch (see table of contents for appropriate coupling heads or drawbar eyes)

Part no.	Type	Gross weight in kg	Nose load in kg	Installation	Change-over relay lever?	Can be combined with AL-KO wheel brake	Hitch mounted				
1 251 881	2.8VB1/-C	2,500 – 3,500	150	top and bottom	No	2051	without	30	–	10	20
1 251 563	2.8VB1/-C	2,500 – 3,500	150	top and bottom	No	2361	without	30	–	10	2
1 251 564	2.8VB1/-C	2,500 – 3,500	150	top and bottom	No	3062 / 3081	without	30	–	10	2

ECE test report no.	ECE type approval no.
Overrun device: 361-0045-97	Drawbar installation: E1 55R-01 0384



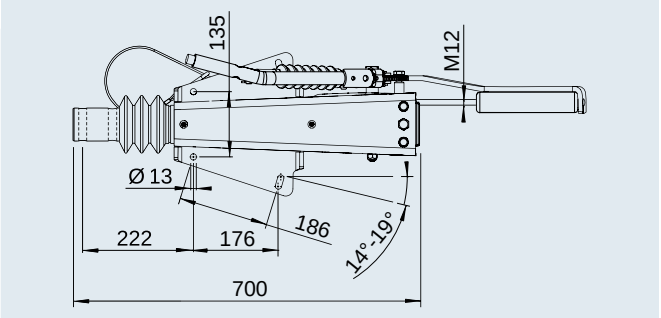

ACCESSORIES FOR OVERRUN DEVICES V



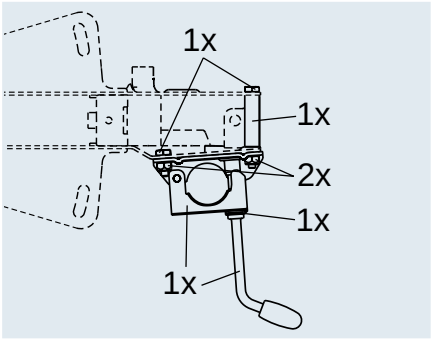

Clamp retrofit set
Load capacity 150 kg

SAP: KLEMMSCHELLE 48D 161/251	
Part no.	293 020
Suitable for types	Overrun device V top installation 161 S, 251 S, 251 G
	1 kg
	– 200 units



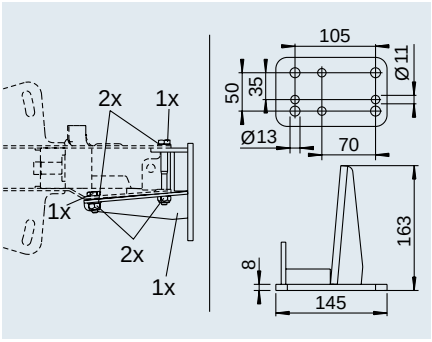

Jockey wheel carrier centre mounting
Load capacity 300 kg

SAP: STUETZRADHALTER NACHRUEST	
Part no.	249 127
Suitable for types	Overrun device V top and bottom installation 161 S, 251 S, 251 G
	1 kg
	– 200 units



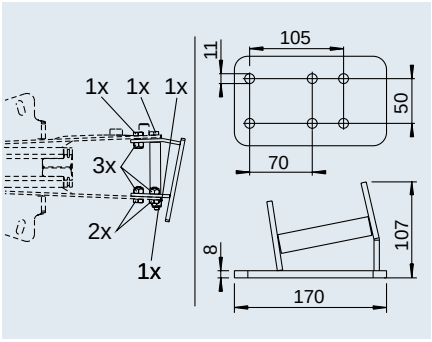

Jockey wheel carrier centre mounting
Load capacity 500 kg

SAP: STUETZRADHALTER 2,8 VB/C	
Part no.	249 811
Suitable for types	Overrun device V top and bottom installation 2.8 VB/1-C
	1 kg
	– 200 units



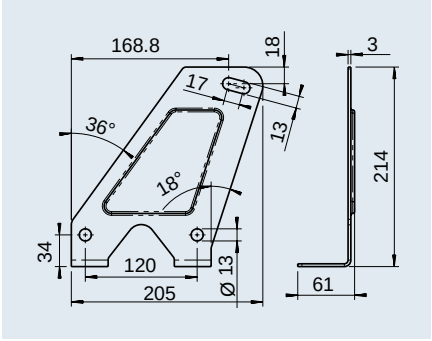

Cover plate for drawbar struts

SAP: ABDECKBLECH	
Part no.	238 162 00 02
Suitable for types	Overrun device V bottom installation 161 S, 251 S, 251 G
	1 kg
	– 200 units



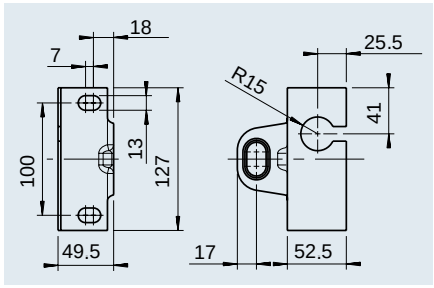

Cover bracket for drawbar struts	
SAP: WINK ANSCHL-	
Part no.	207 241 01 04
Suitable for types	Overrun device V top installation 60 S/2, 90 S/3
	0.5 kg
	– 200 units



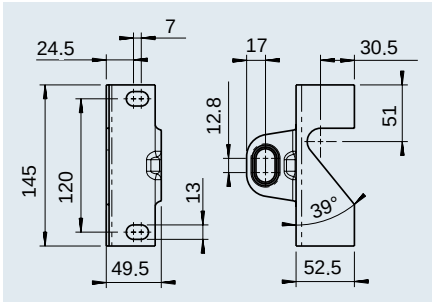

Cover bracket for drawbar struts	
SAP: WINKEL ABREISSSEIL 161S/251S FEUVZ	
Part no.	364 414
Suitable for types	Overrun device V top installation 161 S, 251 S, 251 G
	0.3 kg
	– 200 units



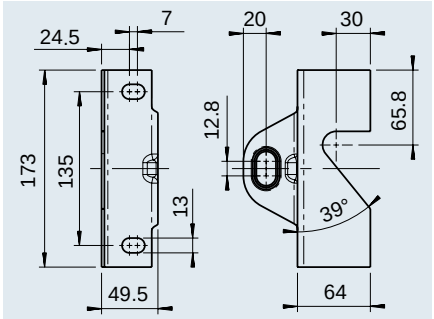

Cover bracket for drawbar struts	
SAP: WINKEL ABREISSSEIL 2,8VB/1 FEUVZ	
Part no.	366 262
Suitable for types	Overrun device V top and bottom installation 2.8 VB/1-C
	0.5 kg
	– 200 units



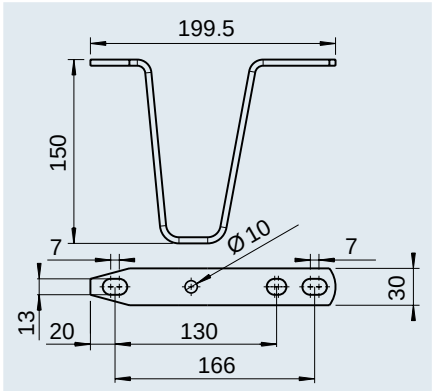

Skid bracket	
SAP: ABSTUETZBUEGEL V-AUSF 150MM FEUVZ	
Part no.	217 132
Suitable for types	Overrun device V top installation 60 S/2, 90 S/3, 161 S, 251 S, 251 G Overrun device V bottom installation 161 S, 251 S, 251 G
	0.5 kg
	– 200 units



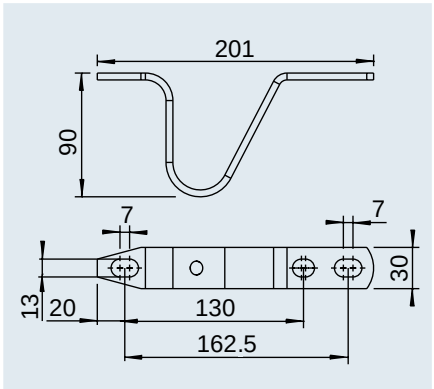

Skid bracket	
SAP: BUEG ABSTL-	
Part no.	217 851
Suitable for types	Overrun device V top installation 60 S/2, 90 S/3, 161 S, 251 S, 251 G Overrun device V bottom installation 161 S, 251 S, 251 G
	0.35 kg
	– 200 units

ACCESSORIES FOR OVERRUN DEVICES V



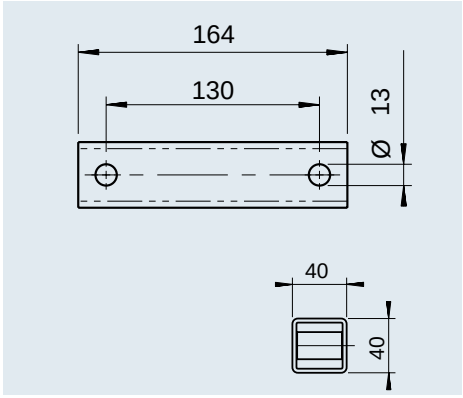

Spacer set height 40 mm	
SAP: SET DISTANZSTÜCK 35DS 60S, 90S-40MM	
Part no.	1 730 090
Suitable for types	Overrun device V top installation 60 S/2, 90 S/3
ECE type app.	E1 55R-01 2389
	1.3 kg
	– 100 units



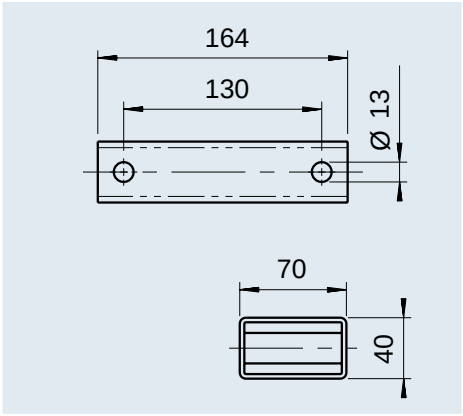

Spacer set height 70 mm	
SAP: SET DISTANZSTÜCK 35DS 60S, 90S-70MM	
Part no.	1 730 091
Suitable for types	Overrun device V top installation 60 S/2, 90 S/3
ECE type app.	E1 55R-01 2389
	2.2 kg
	– 100 units



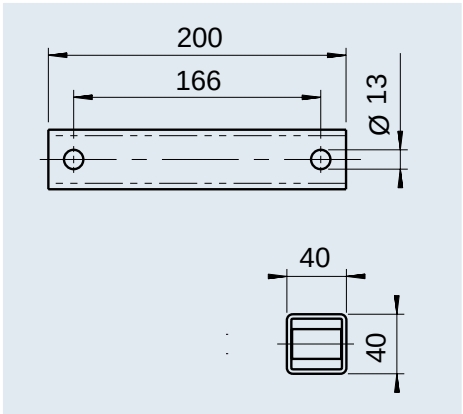

Spacer set height 40 mm	
SAP: SET DISTANZSTÜCK 35DS 161S,251S-40MM	
Part no.	1 730 092
Suitable for types	Overrun device V top installation 161 S, 251 S, AE Profi 3000, 251 G
ECE type app.	E1 55R-01 2389
	1.6 kg
	– 100 units



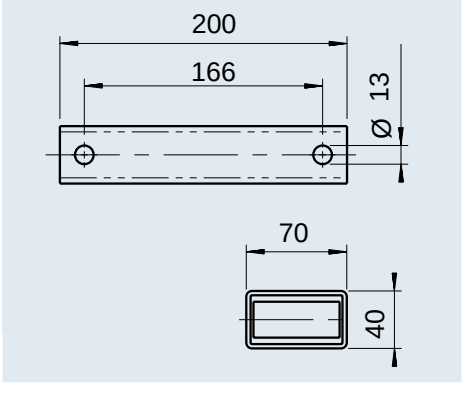

Spacer set height 70 mm	
SAP: SET DISTANZSTÜCK 35DS 161S,251S-70MM	
Part no.	1 730 093
Suitable for types	Overrun device V top installation 161 S, 251 S, AE Profi 3000, 251 G
ECE type app.	E1 55R-01 2389
	2.1 kg
	– 100 units



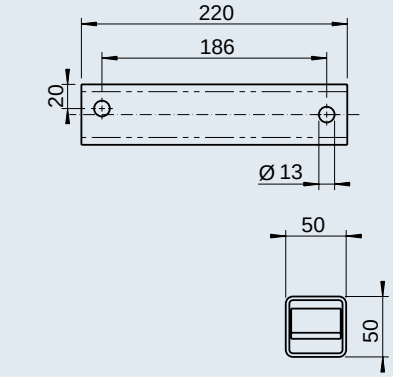

Spacer set height 50 mm	
SAP: SET DISTANZSTÜCK 35DS 2,8VB-50MM	
Part no.	1 730 094
Suitable for types	Overrun device V top installation AE 2.8 VB-1/C
ECE type app.	E1 55R-01 2389
	2.2 kg
	– 100 units



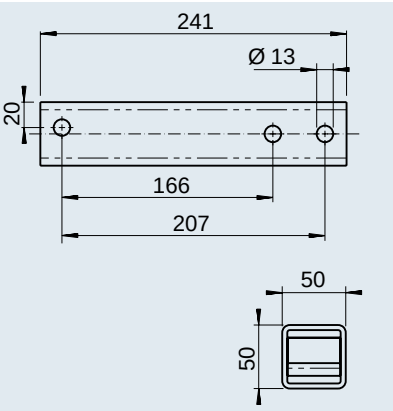

Spacer set height 50 mm	
SAP: SET DISTANZSTÜCK 35DS AE PROFI-50MM	
Part no.	1 730 095
Suitable for types	Overrun device V top installation AE Profi 3500
ECE type app.	E1 55R-01 2389
	3.2 kg
	– 100 units



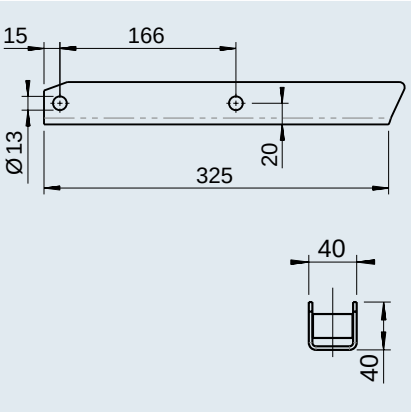

Spacer set height 40 mm	
SAP: SET DISTANZSTÜCK 35DS 200V-40MM	
Part no.	1 730 329
Suitable for types	Overrun device V top installation AE Euro 130V / 150V / 200V
ECE type app.	E1 55R-01 2389
	2.0 kg
	– 100 units

BREAKAWAY CABLE GUIDE FOR OVERRUN DEVICE

YOUR ADVANTAGE
Safe in an emergency!

During inspection or new registration of trailers, the TÜV pays increased attention to the function of the breakaway brake (emergency brake) according to Article 41. It is apparent that a functioning breakaway brake is crucially dependent on an optimum breakaway cable guide. For this reason, AL-KO has developed the breakaway cable guide for retrofitting.

1. On the overrun devices V top installation

MOUNTING / RETROFITTING

The cover bracket with cable guide is bolted onto the drawbar (see diagram).

The breakaway cable is then guided through the slot of the cover bracket.



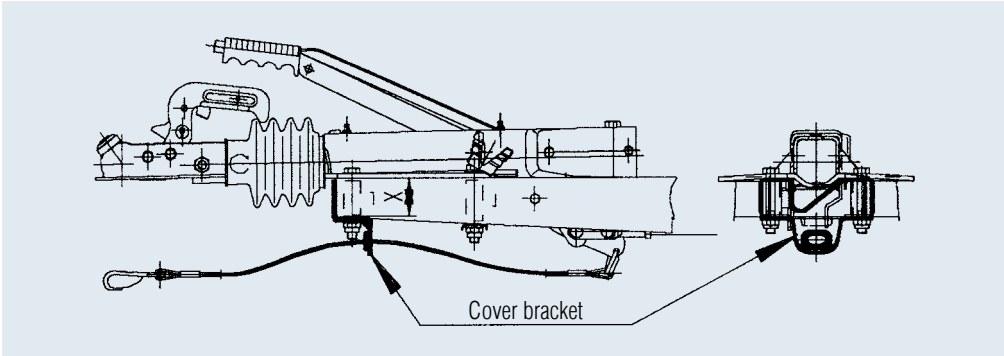

2. On the overrun devices V bottom installation

MOUNTING / RETROFITTING

The breakaway cable guide is bolted on the overrun device (see diagram).

In this case, the original M12 bolt must be replaced by a 10 mm longer bolt according to DIN 931 (not included in the scope of delivery).

The breakaway cable can now be pulled to the eye of the cable guide.



for overrun device V bottom installation	
Part no.	247 198
Type	60 S/2, 90 S/3, 161 S, 251 S, 251 G, 2.8 VB/1

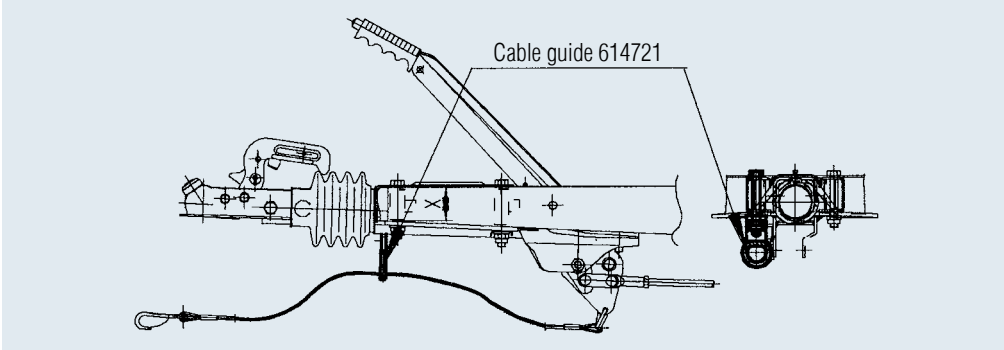

3. On the square overrun devices with support bar

MOUNTING / RETROFITTING

A Ø 13 mm hole (dimension see diagram) is provided on the support bar of the overrun device. The resulting bare metal surface must be sealed with a corrosion protection agent. The breakaway cable guide can then be bolted on the overrun device (see diagram). Push the breakaway cable through, thereby ensuring optimum guidance of the breakaway cable.



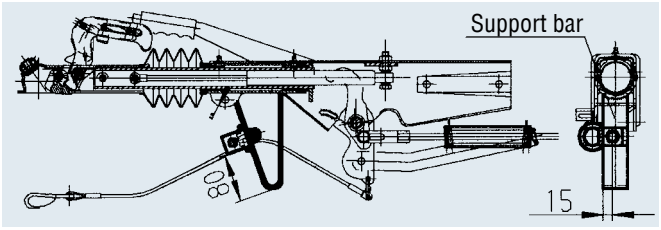

for square overrun device with support bar	
Part no.	614 721
Type	60 S/2, 90 S/3, 161 S, 251 S

4. On the overrun devices tube

MOUNTING / RETROFITTING

The breakaway cable guide is bolted (as per diagram) on the overrun device. Push the breakaway cable through, thereby ensuring optimum guidance of the breakaway cable.



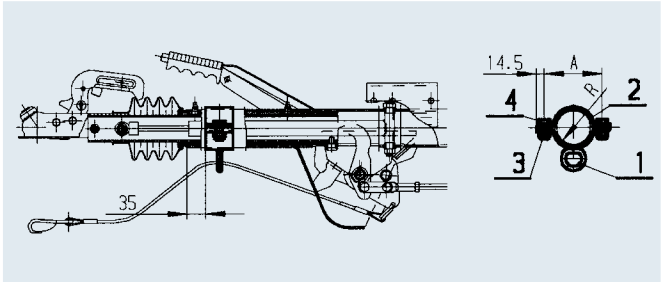

for overrun device tube	
Part no.	247 190
Type	131 R
Part no.	247 191
Type	161 R, 251 R

5. On the overrun devices height-adjustable

MOUNTING / RETROFITTING

A Ø 13 mm hole (see figure) is provided on the overrun device. The resulting bare metal surfaces must be sealed with corrosion protection. The breakaway cable guidecan then be bolted on the overrun device (see diagram). Push the breakaway cable through, thereby ensuring optimum guidance of the breakaway cable.



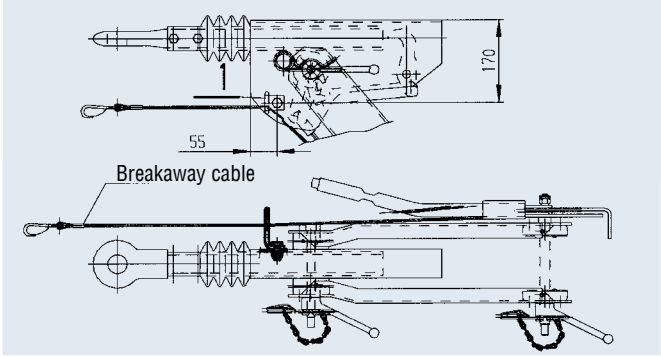

for overrun device height-adjustable	
Part no.	614 721
Type	101 VB, 161 VB, 251 VB, 351 VB

OVERRUN DEVICE PROFI V

One basic solution – many variants

The challenge faced by this project involved responding flexibly and individually to the needs of commercial customers. This resulted in a modular system that meets virtually every requirement!

The AL-KO AE Profi V is available in the weight ranges GA 1,600 to 3,000 kg and GA 2,000 to 3,500 kg.

Numerous drawbar eyes as well as several hitches are available for the hitch components. Practical accessories include the sturdy manoeuvring handles, the robust skid bracket and the centre flange for mounting the various jockey wheels. It is particularly important that the overrun device can also be mounted on the top or bottom of the drawbar or chassis construction of the trailer – this results in different height levels for optimum adaptation to the respective towing vehicle.

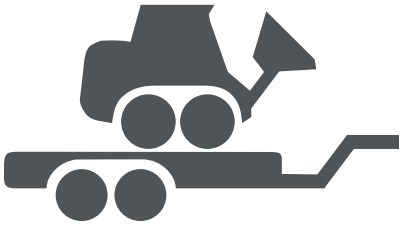



Cast iron coupling
AK 301/351



Stabiliser
AKS 3004/3504



Manoeuvring handle



Centre flange



Skid bracket

JOCKEY WHEEL "Options"



ACCESSORIES "options"

HITCH COMPONENTS "options"





Drawbar eye England Ø 30



Drawbar eye England Ø 40



Drawbar eye DIN Ø 40



Drawbar eye DIN Ø 50 / 40



Drawbar eye Italy Ø 45



Drawbar eye England Ø 2"



Drawbar eye France Ø 68



Drawbar eye NATO Ø 76



Drawbar eye Sweden Ø 57.5



Jockey wheel rigid
Premium



Jockey wheel rigid



Jockey wheel rigid with
anti-slip device



Jockey wheel fully automatic

THE IDEAL OVERRUN DEVICE

Latest technology for the most demanding requirements

YOUR ADVANTAGE

The requirements for functional trailer solutions in the commercial sector are particularly strict.

AL-KO Profi overrun devices are produced from high-quality cast iron, making them ideally suitable for tough applications.

- **Clamp can be optionally used for** jockey wheels with Ø 48 and Ø 60 mm.
  The top part of the clamping clip is provided with recesses for grooved jockey wheels (anti-slip device). On bottom installation, the jockey wheel must be mounted over the centre flange at the rear.
- **Jockey wheel mounting from the outside**
  (No feeding in from below)
- **Can be used for top and bottom installation**
  Maximum handlebar height on bottom installation 100 mm.
- **Low-wear grey cast iron mounting**
  The pull bar is guided in a robust, low-play and low-wear cast iron mounting.
- **Breakaway cable guide as standard**
  So that the emergency brake really will function in an emergency.

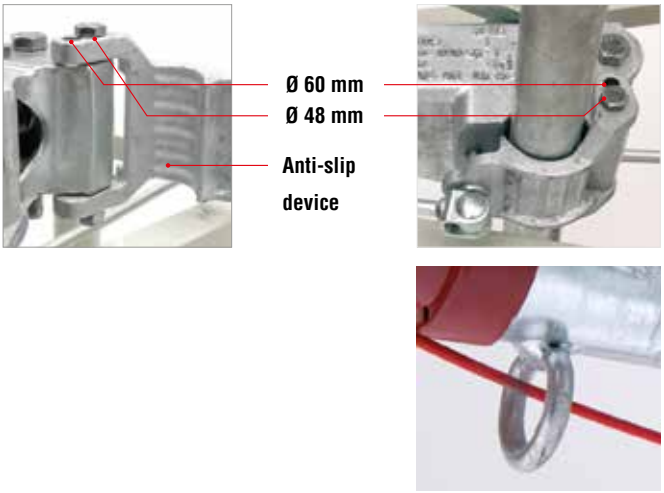

TELESCOPIC HANDBRAKE LEVER

adjustable in length (AL-KO patent)

YOUR ADVANTAGE

- **When closing long lever**
  140 mm longer; i.e. reduced force application
- **Closed short lever**
  For more clearance between the towing vehicle and trailer (when manoeuvring)
- **Handbrake lever without pushbutton**
  On downhill gradients, the trailer can be moved and braked with specific handbrake control.
- **Ergonomically favourable hand lever position**
- **Handbrake lever closed very flat**
  Tailgate vehicles can usually be opened without problems.





Handbrake lever opened (towing)



Handbrake lever closed (parking brake forwards)



Handbrake lever closed (parking brake backwards, brake optimally set)

OVERRUN DEVICES PROFI V

without drawbar section / push-on hitch

SAP: AE KPL V PROFI 3000 AK301

AE Profi V 3,000 kg with coupling head

Part no.	Type	Gross weight in kg	Nose load in kg	Installation	Change-over relay lever?	Can be combined with AL-KO wheel brake	Hitch mounted				
1 224 121	AE 3000	1,600 – 3,000	150	Top+bottom	No	1637/2051	AK 301	22.5	–	25	2
1 224 122	AE 3000	1,600 – 3,000	150	Top+bottom	No	2361	AK 301	22.5	–	25	20
1 224 123	AE 3000	1,600 – 3,000	150	Top+bottom	No	3062/3081	AK 301	22.5	–	25	20

ECE test report no.	ECE type approval no.
Overrun device: 361-016-12	Drawbar installation: E1 55R-01 1648



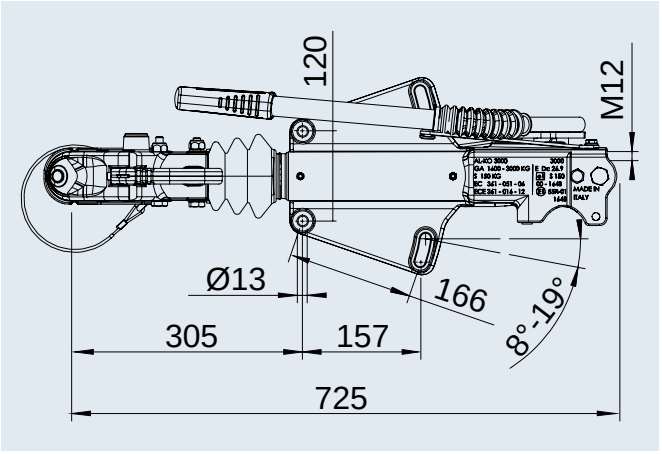

SAP: AE KPL V PROFI 3000 OHNE

AE Profi V 3,000 kg without coupling head

Part no.	Type	Gross weight in kg	Nose load in kg	Installation	Change-over relay lever?	Can be combined with AL-KO wheel brake	Hitch mounted				
1 224 124	AE 3000	1,600 – 3,000	150	Top+bottom	No	1637/2051	without	19.5	–	25	2
1 224 125	AE 3000	1,600 – 3,000	150	Top+bottom	No	2361	without	19.5	–	25	20
1 224 126	AE 3000	1,600 – 3,000	150	Top+bottom	No	3062/3081	without	19.5	–	25	20

ECE test report no.	ECE type approval no.
Overrun device: 361-016-12	Drawbar installation: E1 55R-01 1648



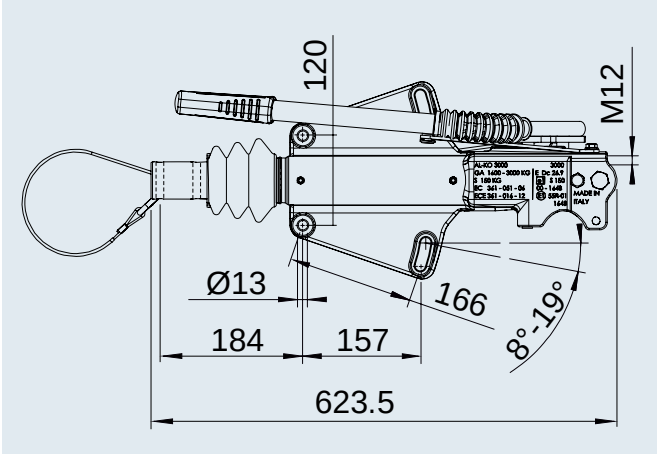

SAP: AE KPL V PROFI 3500 AK351

AE Profi V 3,500 kg with coupling head

Part no.	Type	Gross weight in kg	Nose load in kg	Installation	Change-over relay lever?	Can be combined with AL-KO wheel brake	Hitch mounted				
1 224 136	AE 3500	2,000 - 3,500	350	Top+bottom	No	1637/2051	AK 351	28.5	–	15	20
1 224 137	AE 3500	2,000 - 3,500	350	Top+bottom	No	2361	AK 351	28.5	–	15	2
1 224 138	AE 3500	2,000 - 3,500	350	Top+bottom	No	3062/3081	AK 351	28.5	–	15	20

ECE test report no.	ECE type approval no.
Overrun device: 361-017-12	Drawbar installation: E1 55R-01 1649



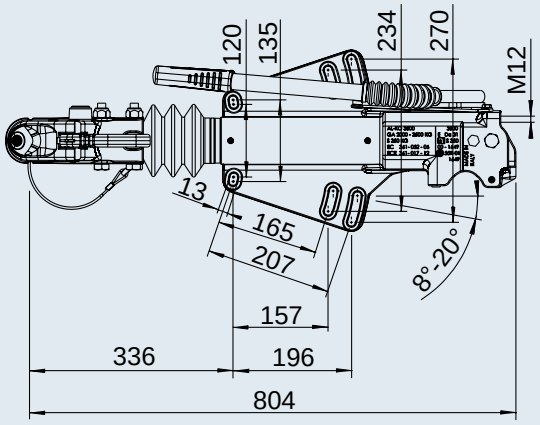

SAP: AE KPL V PROFI 3500 OHNE

AE Profi V 3,500 kg without coupling head

Part no.	Type	Gross weight in kg	Nose load in kg	Installation	Change-over relay lever?	Can be combined with AL-KO wheel brake	Hitch mounted				
1 224 139	AE 3500	2,000 – 3,500	350	Top+bottom	No	1637/2051	without	25.5	–	15	20
1 224 140	AE 3500	2,000 – 3,500	350	Top+bottom	No	2361	without	25.5	–	15	2
1 224 141	AE 3500	2,000 – 3,500	350	Top+bottom	No	3062/3081	without	25.5	–	15	20

ECE test report no.	ECE type approval no.
Overrun device: 361-017-12	Drawbar installation: E1 55R-01 1649



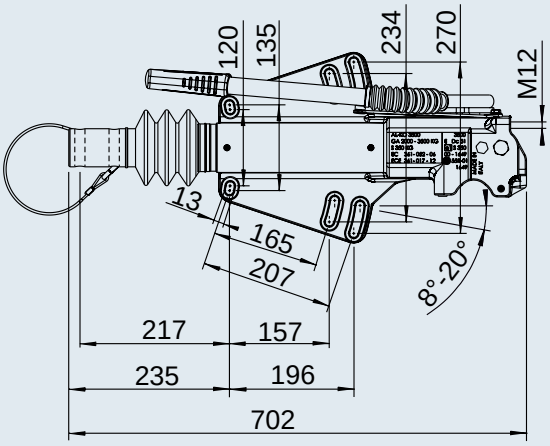

ACCESSORIES FOR OVERRUN DEVICE PROFI V



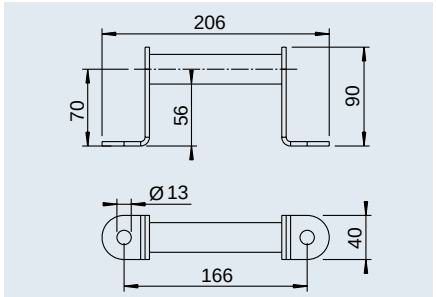

Manoeuvring handle
for overrun device Profi 3000

SAP: RANGIERGRIFF 166MM	
Part no.	1 224 147
	0.45 kg
	– 200 units



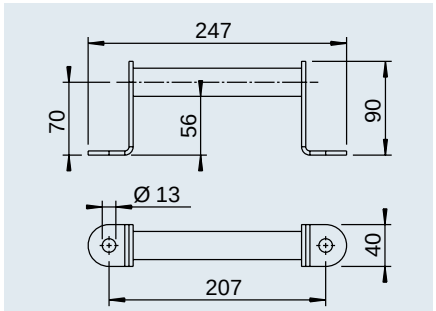

Manoeuvring handle
for overrun device Profi 3500

SAP: RANGIERGRIFF 207MM	
Part no.	1 224 195
	0.5 kg
	– 200 units



The components are supplied loose

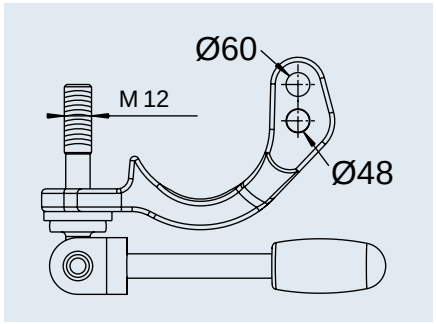

Clamp (side mounting) Ø48/Ø60
for overrun device Profi 3000/3500

SAP: KLEMMSCHELLE KPL PROFI-AE	
Part no.	1 224 196
	1.0 kg
	– 200 units



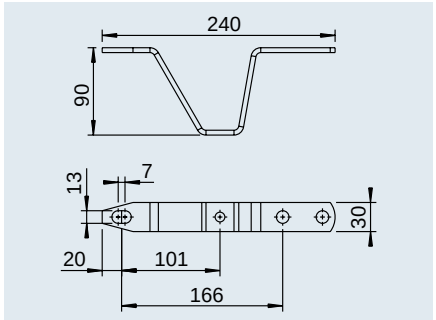

Skid bracket (top installation)
for overrun device Profi 3000/3500

SAP: ABSTELLBÜGEL	
Part no.	1 224 151
	0.40 kg
	– 200 units



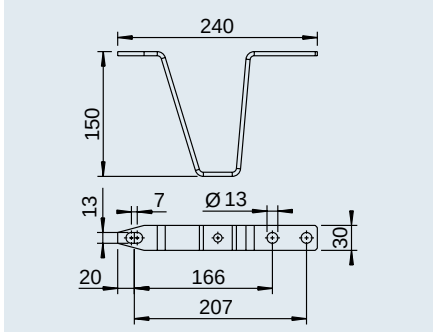

Skid bracket (bottom installation)
for overrun device Profi 3000/3500

SAP: ABSTELLBÜGEL	
Part no.	1 224 537
	0.50 kg
	– 200 units



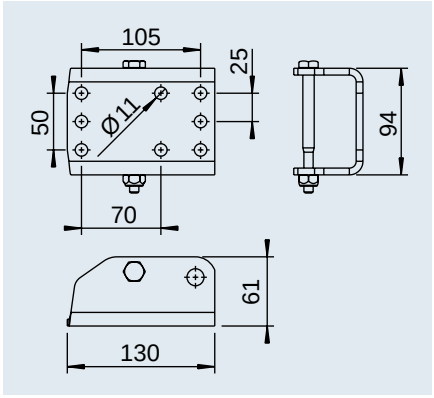

Centre flange
for overrun device Profi 3000

SAP: STÜTZRADHALTER KPL	
Part no.	1 224 152
	1.00 kg
	– 200 units



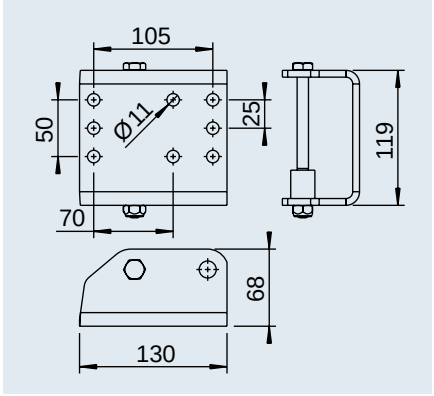

Centre flange
for overrun device Profi 3500

SAP: STÜTZRADHALTER KPL	
Part no.	1 224 146
	1.00 kg
	– 200 units



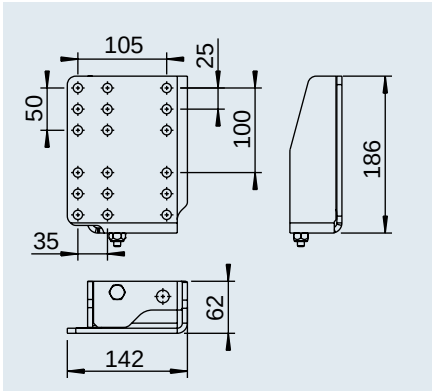

Elevated centre flange
for overrun device Profi 3000

SAP: STÜTZRADHALTER ERHÖHT KPL	
Part no.	1 224 534
	2.50 kg
	– 200 units



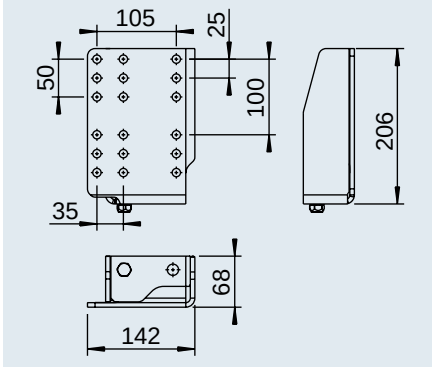

Elevated centre flange
for overrun device Profi 3500

SAP: STÜTZRADHALTER ERHÖHT KPL	
Part no.	1 224 535
	2.50 kg
	– 200 units

ACCESSORIES FOR OVERRUN DEVICE PROFI V



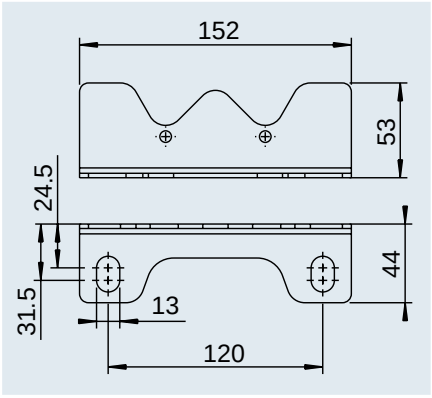

Cover bracket
for overrun device Profi 3000

SAP: WINKEL ANSCHL- FEUVZ	
Part no.	1 363 501
	0.25 kg
	– 200 units



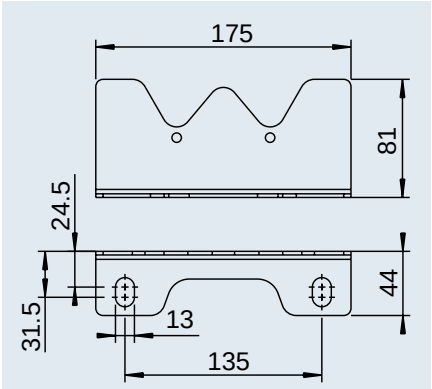

Cover bracket
for overrun device Profi 3000

SAP: WINKEL ANSCHL- FEUVZ	
Part no.	1 363 502
	0.35 kg
	– 200 units



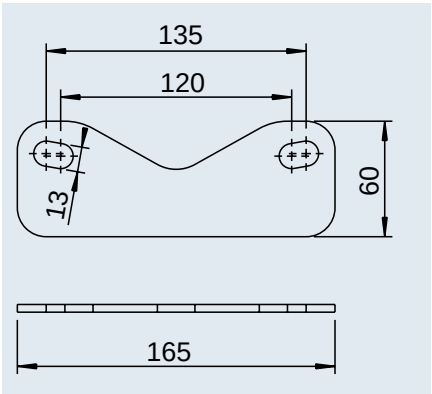

Reinforcement plate
for overrun device Profi 3000/3500

SAP: ABDECKBLECH	
Part no.	1 366 102
	0.5 kg
	– 200 units

OVERRUN DEVICE V STEEL

with short, flat spring accumulator lever; 950 to 2,700 kg

SAP: AE KPL V OB 161S AK161 FEDS

Overrun device V 161S with AK 161

Part no.	Type	Gross weight in kg	Nose load in kg	Version of drawbar installation	Change-over relay lever?	Can be combined with AL-KO wheel brake	Hitch mounted				
1 253 077	161 S	950 – 1,600	100	top	No	1637 / 2051	AK 161	17	–	15	20

SCOPE OF DELIVERY

- Overrun device (see illustration)
- Plug holder (loose)
- Instructions for use (loose)

ECE test report no.

Overrun device: 361-0047-97

ECE type approval no.

Drawbar installation: E1 55R-01 0229



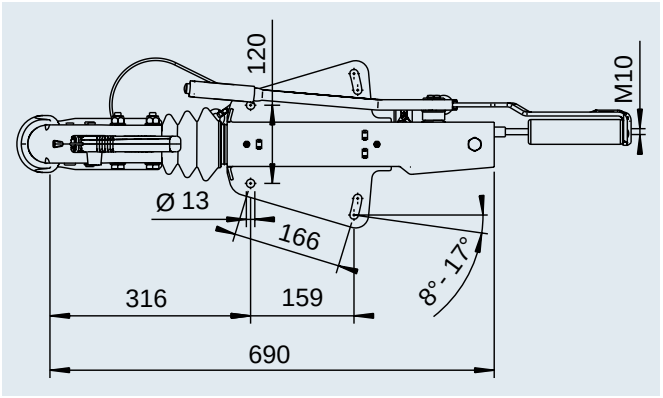

SAP: AE KPL V OB 251S AK270 FEDS

Overrun device V 251S with AK 270

Part no.	Type	Gross weight in kg	Nose load in kg	Version of drawbar installation	Change-over relay lever?	Can be combined with AL-KO wheel brake	Hitch mounted				
1 253 084	251 S	1,500 – 2,700	120	top	No	1637 / 2051	AK 270	19	–	15	20

SCOPE OF DELIVERY

- Overrun device (see illustration)
- Plug holder (loose)
- Instructions for use (loose)

ECE test report no.

Overrun device: 361-0044-97

ECE type approval no.

Drawbar installation: E1 55R-01 0227



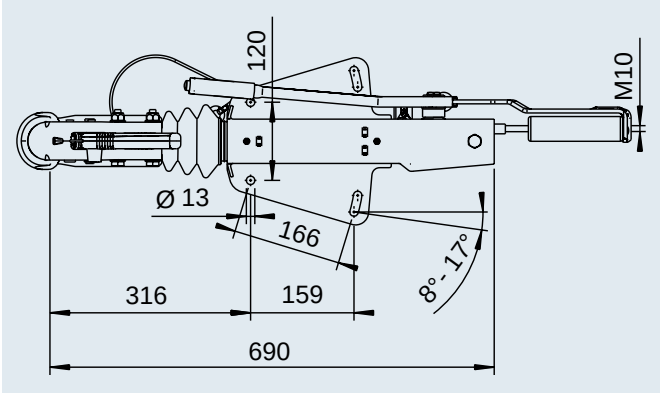

OVERRUN DEVICE V AND SQUARE

with lowering handbrake lever; 950 to 3,500 kg

YOUR ADVANTAGE

After the handbrake has been applied, the handbrake lever can be lowered. The space created above the overrun device is now free and can be used.

Important: This handbrake position could lead to the mistaken assumption that the handbrake has already been released.
For this reason the dealer should inform the user about this special function.

SAMPLE APPLICATIONS

Trailers in which the area above the overrun device must be free.

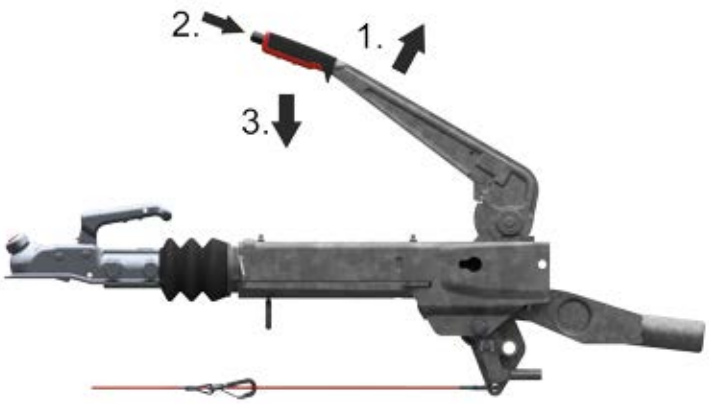

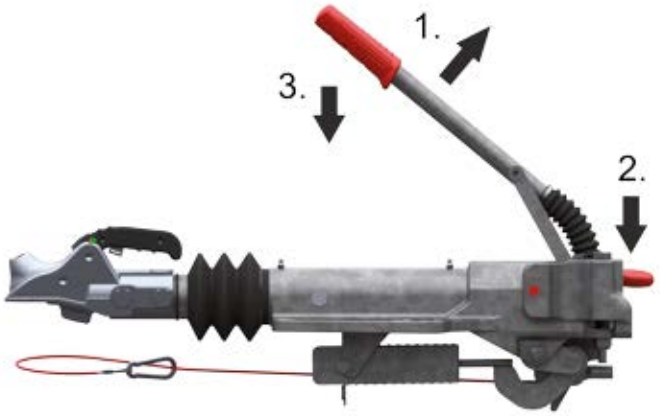

OPERATION OF STEEL OVERRUN DEVICE

Brake the trailer when stationary.
Pull the handbrake lever (1) up = parking brake is active and the brake rod is tensioned.

Lower handbrake lever
Press the pushbutton (2) on the handbrake lever and, at the same time, lower the handbrake lever (3) slowly and carefully towards the overrun device.
Important: Perform the lowering carefully once there is little room left in this position between your hand and the overrun device.

Release the parking brake on the trailer again
Press the pushbutton (2) on the handbrake lever and, at the same time, pull the handbrake lever (1) upwards.
Let out the pushbutton (2) and then press the handbrake (3) down, thereby releasing the parking brake again.

OPERATION OF OVERRUN DEVICE PROFI AND SWIVELLING 3.5 t

Brake the trailer when stationary.
Pull the handbrake lever (1) up = parking brake is active and the brake rod is tensioned.

Lower handbrake lever
Press the small locking lever (2) on the bottom of the handbrake lever and, at the same time, slowly and carefully lower the handbrake lever (3) towards the overrun device.
Important: Perform the lowering carefully once there is little room left in this position between your hand and the overrun device.

Release the parking brake on the trailer again
Press the small locking lever (2) on the bottom of the handbrake lever and, at the same time, pull the handbrake lever (1) back up.
Let out the small locking lever (2) and then push the handbrake (3) back down. The parking brake is released again.

OVERRUN DEVICE V AND SQUARE STEEL

with lowering handbrake lever; 950 to 3,000 kg

SAP: AE KPL VKT 70 AK161 TOTP

Overrun device square 161 S with AK 161

Part no.	Type	Gross weight in kg	Nose load in kg	Version of drawbar installation	Change-over relay lever?	Can be combined with AL-KO wheel brake	Hitch mounted				
1 253 083	161 S	950 – 1,600	100	Square 70	Yes	2051 / 2361	AK 161	17	–	15	20

SCOPE OF DELIVERY

- Overrun device (see illustration)
- Plug holder (loose)
- Instructions for use (loose)

ECE test report no.

Overrun device: 361-0047-97

ECE type approval no.

Drawbar installation: E1 55R-01 0267



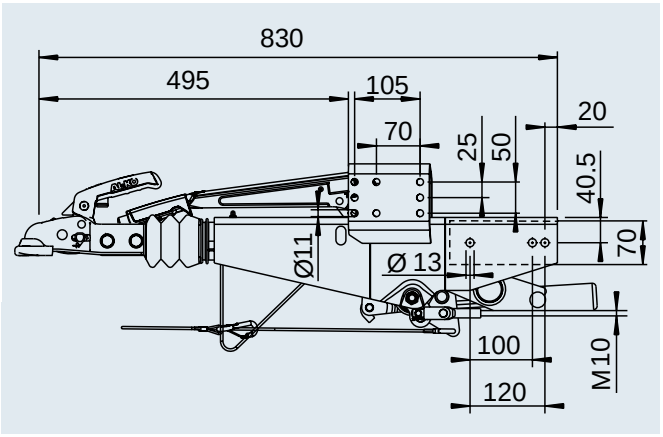

SAP: AE KPL V OB AK161 TOTP

Overrun device V 161 S with AK 161 and 251 G with AK 301

Part no.	Type	Gross weight in kg	Nose load in kg	Version of drawbar installation	Change-over relay lever?	Can be combined with AL-KO wheel brake	Hitch mounted				
1 253 076	161 S	950 – 1,600	100	top	Yes	2051 / 2361	AK 161	14	–	15	20
1 251 332	251 G	1,550 – 3,000	120	top	Yes	3062 / 3081	AK 301	19	–	15	20

SCOPE OF DELIVERY

- Overrun device (see illustration)
- Plug holder (loose)
- Instructions for use (loose)

ECE test report no.

Overrun device: 361-0047-97

ECE type approval no.

Drawbar installation: E1 55R-01 0227



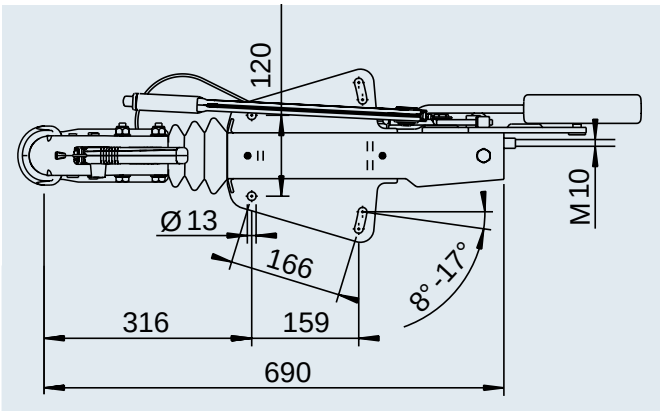

OVERRUN DEVICE V CAST-IRON

with lowering handbrake lever; 1,600 to 3,500 kg

SAP: AE KPL V PROFI3000 AK301 ASB-HB G

Overrun device Profi V with AK 301

Part no.	Type	Gross weight in kg	Nose load in kg	Version of drawbar installation	Change-over relay lever?	Can be combined with AL-KO wheel brake	Hitch mounted				
1 224 654	AE 3000	1,600 – 3,000	150	top + bottom	No	3062 / 3081	AK 301	23	–	15	20
1 251 464	AE 3000	1,600 – 3,000	150	top + bottom	No	2361	AK 301	23	–	15	20
1 251 465	AE 3000	1,600 – 3,000	150	top + bottom	No	2051	AK 301	23	–	15	20

SCOPE OF DELIVERY

- Overrun device (see illustration)
- Plug holder (loose)
- Instructions for use (loose)

ECE test report no.

Overrun device: 361-016-12

ECE type approval no.

Drawbar installation: E1 55R-01 1648



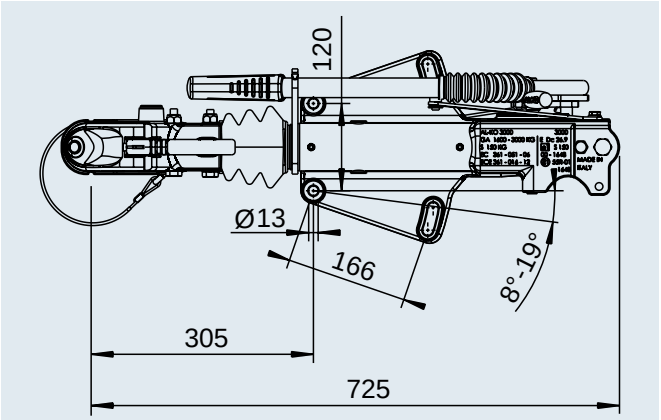

SAP: AE KPL V PROFI3500 AK351 ASB-HB

Overrun device Profi V with AK 351

Part no.	Type	Gross weight in kg	Nose load in kg	Version of drawbar installation	Change-over relay lever?	Can be combined with AL-KO wheel brake	Hitch mounted				
1 224 995	AE 3500	2,000 – 3,500	150	top + bottom	No	2361	AK 351	29	–	15	20
1 224 996	AE 3500	2,000 – 3,500	150	top + bottom	No	3062 / 3081	AK 351	29	–	15	20

SCOPE OF DELIVERY

- Overrun device (see illustration)
- Plug holder (loose)
- Instructions for use (loose)

ECE test report no.

Overrun device: 361-016-12

ECE type approval no.

Drawbar installation: E1 55R-01 1649



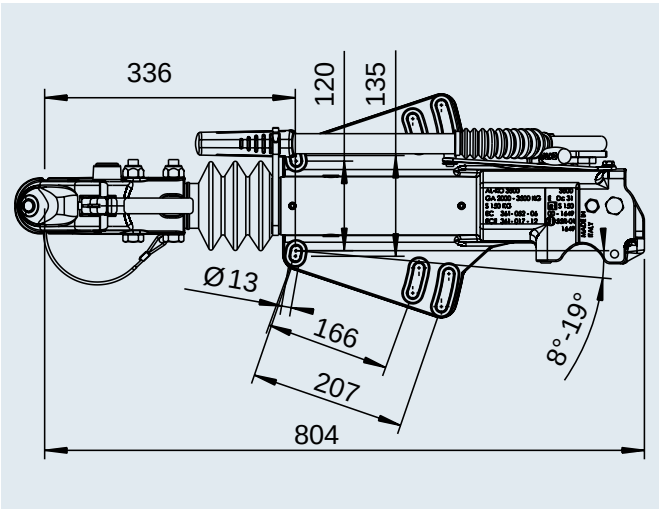

OVERRUN DEVICE V AND SQUARE

with hydraulic brake transmission device

YOUR ADVANTAGE

- Soft, comfortable overrun procedure, no overrun shock.
- Minimum transmission losses = better braking values.

SAMPLE APPLICATIONS

- Lifting platform trailer
- Transport trailer for sensitive goods (electronics, glass, etc.)
- Animal trailers, especially horse boxes



Figure 1

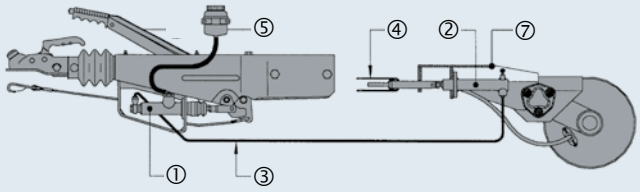

Figure 2

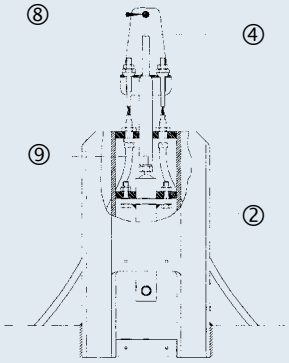

1 = main brake cylinder
2 = slave cylinder
3 = hydraulic lines
4 = compensation profile
5 = expansion tank
6 = handbrake lever
7 = bracket
8 = connection for parking brake
9 = Bowden cable

SERVICE BRAKE/EMERGENCY BRAKE

On the service brake, the drawbar tube pushes the overrun device via the relay lever onto the main brake cylinder (Fig. 1 ①). In the emergency brake, the same thing happens via the handbrake lever operated by the breakaway cable.

Hydraulic lines (or hoses Fig. 1 ③) transfer the pressure to the slave cylinder (Fig. 1 ②) on the axle.

The slave cylinder (Fig. 1 ②) pulls on the Bowden cable and the expanding joint lock via the compensation profile (Fig. 1 ④). This expands the brake shoes and the trailer is braked.

HANDBRAKE/PARKING BRAKE

Installation situation **Slave cylinder** is mounted in driving direction **in front of the axle**:
In V overrun devices, the attachment kit for the slave cylinder is mounted in front of the axle in the driving direction. The handbrake in the hydraulic overrun device can thus brake the vehicle via the brake rod (see Fig. 3):

Installation situation **Slave cylinder** is mounted in driving direction **behind the axle**:
If the slave cylinder is mounted behind the axle, the handbrake of the overrun device can no longer be used. In this installation case, an additional handbrake/parking brake will have to be mounted at a suitable point on the vehicle (see Fig. 4).

Example: Trailer with V drawbar, tandem, max. 2,600 kg permitted gross weight

Figure 3

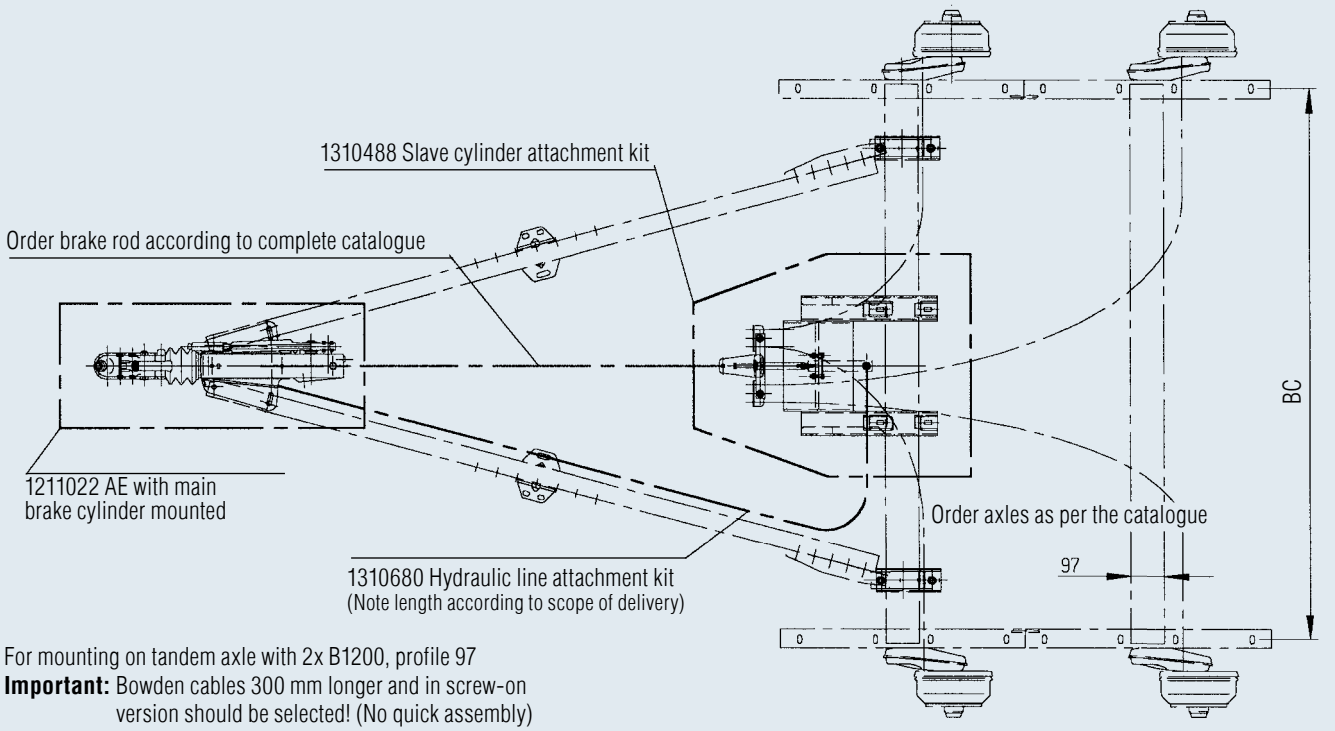

For mounting on tandem axle with 2x B1200, profile 97
Important: Bowden cables 300 mm longer and in screw-on version should be selected! (No quick assembly)

Example: Trailer with square AE, single axle, max. 1,600 kg permitted gross weight (special variant)

Figure 4

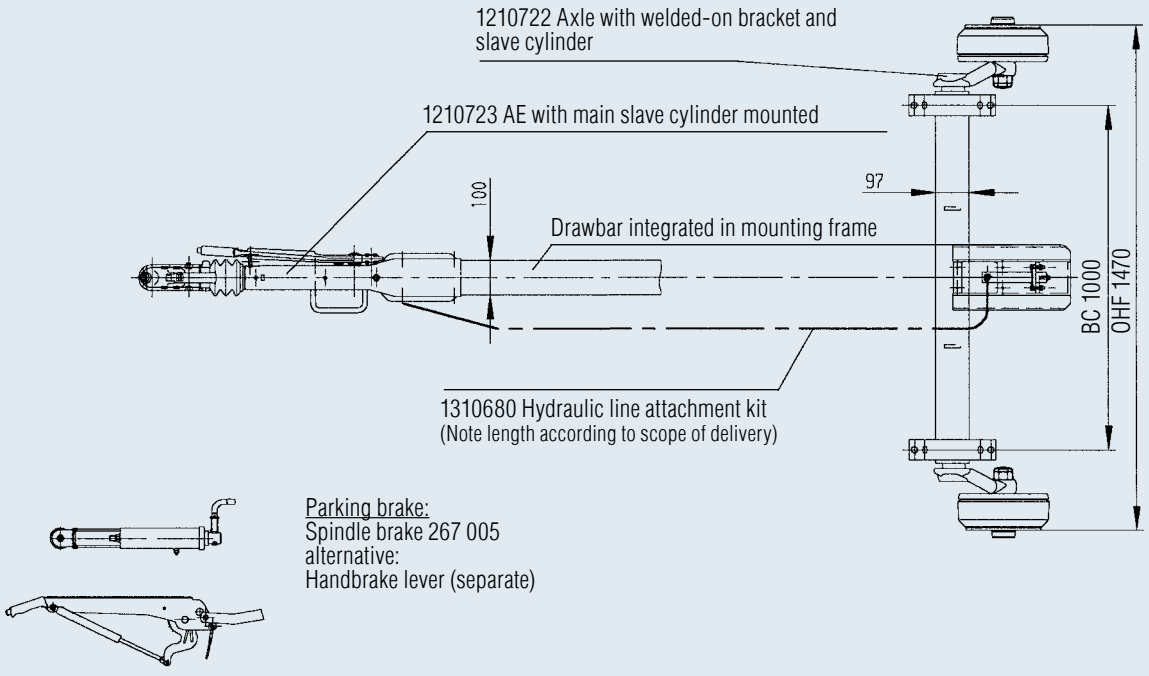

OVERRUN DEVICE V

with hydraulic brake transmission device

MOUNTING

The following are required to mount the hydraulic brake transmission:

- Ventilating device (with adapter for expansion tank)
- Flaring unit for brake line (with pin 4 x 7.5)

After mounting the chassis, fill and bleed the brake system. **Important!** The braking effect will not be sufficient if the brake system has not been bled or only bled insufficiently! **Risk of accidents!**

An independent mechanical parking brake is specified for trailers with a hydraulic brake transmission device.

The axles offered cannot be connected centrally with a central tube drawbar. A central tube drawbar must be integrated in the mounting frame or, alternatively, the offered axles must be connected using a V drawbar.



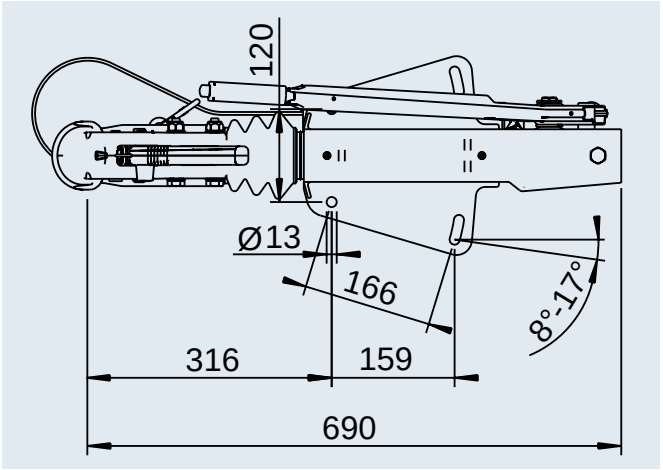

SAP: AE KPL V OB 251S HYD AK270 GASF

1. Overrun device V

Part no.	Type	Gross weight kg	Nose load kg	Installation	Can be combined with AL-KO wheel brake	Changeover relay lever?	Handbrake lever	ECE test report no. overrun device	ECE type approval no. drawbar installation	Coupling head mounted type/version
1 253 082	-V- 251 S	1,500 – 2,600	100	Top	2051	yes 2361/3081	Gas spring	361-0044-97 251 S/A	E1 55R-01 0227 251 S	AK 270
1 211 677	-V- 2.8 VB	2,500 – 3,500	150	Top	2361	No	Gas spring	361-0045-97	E1 55R-01 0384 351 S	AK 351

2. Hydraulic lines attachment kit

Part no.	Designation/content
1 310 680	Brake line 2 x 2000 mm + small parts (see scope of delivery)

3. Slave cylinder attachment kit for tandem axle A-frame chassis

Part no.	Designation/content	For axle beam Ø mm
1 310 488	Screw-on bracket, slave cylinder + small parts (see technical drawing)	97 (= max. GA tandem 2600 kg)
1 310 907	Screw-on bracket, slave cylinder + small parts (see technical drawing)	110 (= max. GA tandem 3500 kg)

SQUARE OVERRUN DEVICE

with hydraulic brake transmission device

MOUNTING

The following are required to mount the hydraulic brake transmission:

- Ventilating device (with adapter for expansion tank)
- Flaring unit for brake line (with pin 4 x 7.5)

After mounting the chassis, fill and bleed the brake system. **Important!** The braking effect will not be sufficient if the brake system has not been bled or only bled insufficiently! **Risk of accidents!**

An independent mechanical parking brake is specified for trailers with a hydraulic brake transmission device.

The axles offered cannot be connected centrally with a central tube drawbar. A central tube drawbar must be integrated in the mounting frame or, alternatively, the offered axles must be connected using a V drawbar.



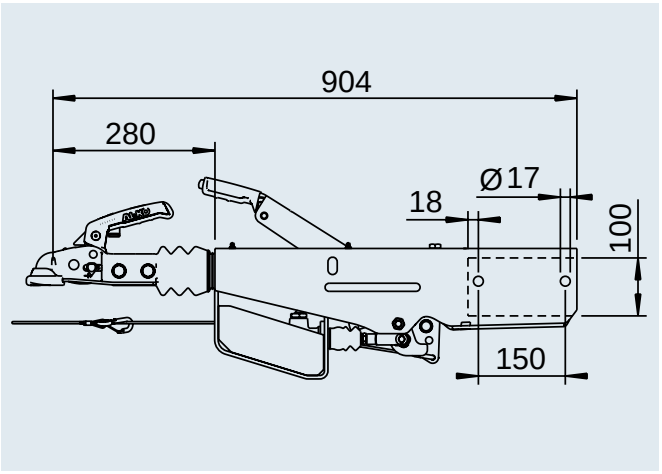

SAP: AE KPL VKT100 161S/HYD AK161 SOND

1. Overrun device V

Part no.	Type	Gross weight kg	Nose load kg	Installation	Can be combined with AL-KO wheel brake	Changeover relay lever?	Handbrake lever	ECE test report no. overrun device	ECE type approval no. drawbar installation	Coupling head mounted type/version
1 253 079	Square 161 S	950 – 1,600	100	100	2051	yes 2361/3081	Gas spring	361-0047-97 161 S/A	E1 55R-01-267 161 K	AK 161
1 253 081	Square 251 S	1,500 – 2,600	100	100	2051	yes 2361/3081	Gas spring	361-0044-97 251 S/A	E1 55R-01-268 251 K	AK 270

2. Hydraulic lines attachment kit

Part no.	Designation/content
1 310 680	Brake line 2 x 2000 mm + small parts (see scope of delivery)

3. Slave cylinder attachment kit for tandem axle A-frame chassis

Part no.	Designation/content	For axle beam Ø mm
1 310 488	Screw-on bracket, slave cylinder + small parts (see technical drawing)	97 (= max. GA tandem 2600 kg)
1 310 907	Screw-on bracket, slave cylinder + small parts (see technical drawing)	110 (= max. GA tandem 3500 kg)

OVERRUN DEVICE V

2,500 to 6,000 kg – up to 40 km/h

SAP: AE KPL V OB 44 V DINÖSE 4400

Overrun device 44 V and 45 ZA with DIN drawbar eye Ø 40

Part no.	Central axle trailer	Pivoting drawbar trailer	Type	Gross weight in kg	Nose load in kg	Installation	Change-over relay lever?	Can be combined with AL-KO wheel brake	DIN draw-bar eye				
1 251 725	X		44 V	2,500 – 4,400	300	Top Bottom from 16°	No	2051 / 2361	Ø 40	32	–	10	25
1 251 724	X		44 V	2,500 – 4,400	300	Top Bottom from 16°	No	3062 / 3081	Ø 40	32	–	10	25
1 251 745		X	45 ZA	3,500 – 4,500	–	Top Bottom from 16°	No	3062 / 3081	Ø 40	32	–	10	25

SCOPE OF DELIVERY

- Overrun device (see illustration)
- Plug holder (loose)
- Instructions for use (loose)
- Handbrake lever (loose)

ECE test report

with individual acceptance



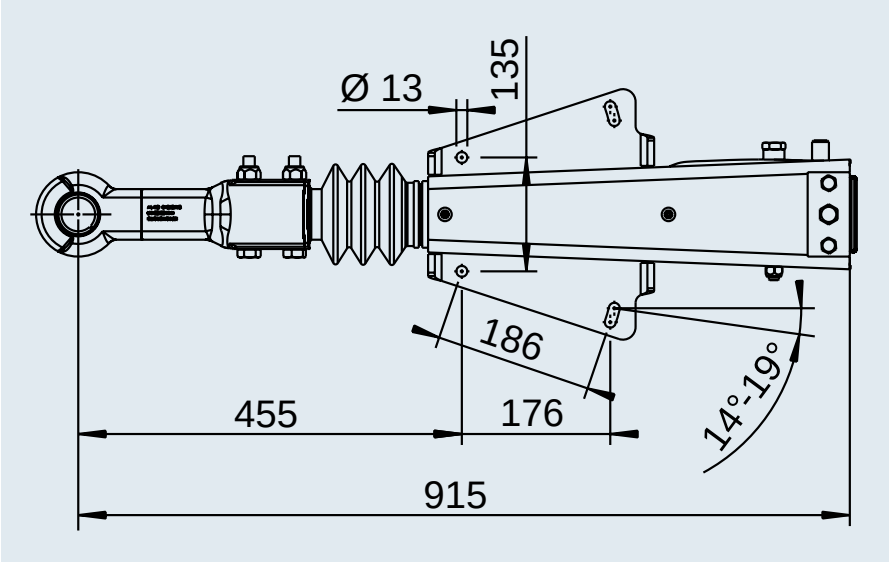



SAP: AE KPL V OB 50 V DINÖSE

Overrun device 50 V and 60 ZA with DIN drawbar eye Ø 40

Part no.	Central axle trailer	Pivoting drawbar trailer	Type	Gross weight in kg	Nose load in kg	Instal-lation	Change-over relay lever?	Can be combined with AL-KO wheel brake	DIN draw-bar eye				
1 730 502	X		50 V	4,400 – 5,000	300	Top	No	2361 / 3062 / 3081	Ø 40	38	–	10	30
1 225 966		X	60 ZA	4,700 – 6,000	–	Top	No	2361 / 3062 / 3081	Ø 40	38	–	10	30

3

SCOPE OF DELIVERY

- Overrun device (see illustration)
- Plug holder (loose)
- Instructions for use (loose)
- Handbrake lever (loose)

ECE test report

with individual acceptance



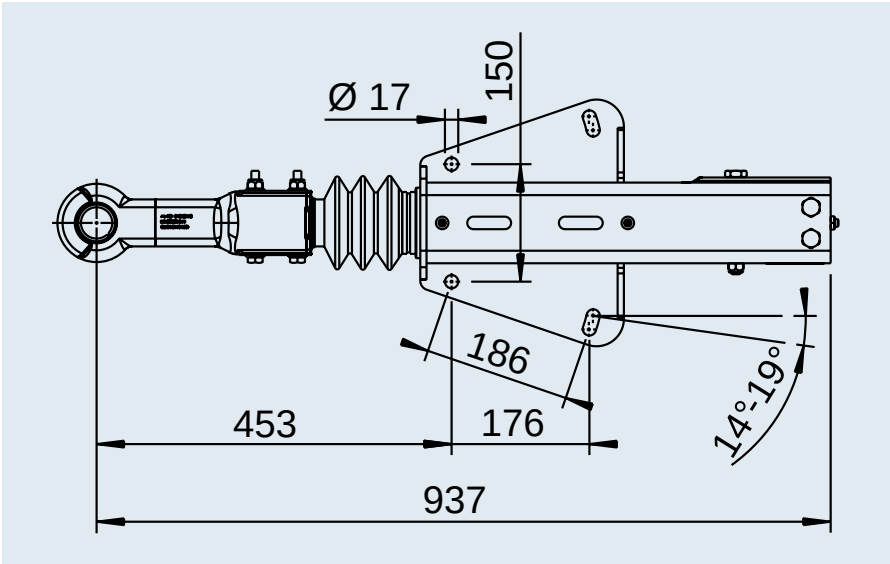



TOWBAR CONNECTIONS V

1,000 to 3,500 kg

YOUR ADVANTAGE

A-frame chassis from stock!

Select: Towbars with jockey wheel attachment, suitable linkage with bolted fasteners, connecting parts from towbar to axle, overrun device and axle. Everything from stock!

Important!

Special dimensions (lengths, connections, etc.) are possible on request.
Please contact us!

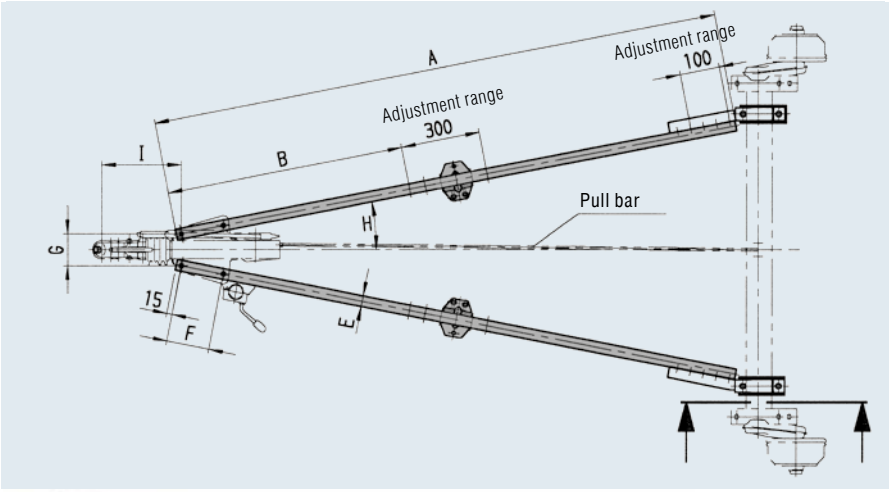

SURFACE TREATMENT

I Hot-dip galvanised



101T

SAP: ZUGVERBNDG V

Towbar connection													Overrun device			
Part no. per pair	Type	Test code E1 55R-01	Gross weight trailer kg	Nose load kg	Dimensions Length A	B	C	D	E	F	G	H with top installation	H with bottom installation	I	K with
249 377 249 378 249 379 249 380	101T	ECE: E1 55R-01 0538	1,000	100	1850 2000 2150 2300	900 to 1200	60	53	40	130	100	11° to 13.5°	11° to 13.5°	302	H 11° 1170 to 1465
249 381 249 382 249 383	161T	ECE: E1 55R-01 0540	1,600	100	1800 2000 2500	900 to 1200	60	53	40	166	120	8° to 15°	12° to 15°	303	H 11° 1170 to 1465
249 384 249 385 249 386	251T	ECE: E1 55R-01 0535	2,800	100	1800 2000 2500	900 to 1200	60	53	50	166	120	8° to 15°	13.5° to 15°	303	H 11° 1170 to 1465
249 387 249 388 249 389	351T	ECE: E1 55R-01 0539	3,000	150	2000 2300 2500	1100 to 1400 1100 to 1400 1100 to 1400	80	53	50	166	120	12° to 15°	13.5° to 15°	308	H 12° 1180 to 1475
249 390 249 392 244 100	351T	ECE: E1 55R-01 0539	3,500	150	2000 2300 2500	900 to 1200 1100 to 1400 1100 to 1400	80	53	50	186	135	13° to 17°	16° to 17°	330	H 14° 1190–1485 H 14° 1385-1680
1 224 330 1 224 331 1 224 332	351T	ECE: E1 55R-01 0539	3,500	150	2000 2300 2500	900 to 1200 1100 to 1400 1100 to 1400	80	53	50	208	135	8° to 20°	8° to 20°	330	H 14° 1385-1680 H 14° 1385-1680

SCOPE OF DELIVERY

A) Towbar connections (pair) including:
- Fixing bolts
- Jockey wheel attachment

B) Towbar connection (pair)
(please order separately):
- Mounting instructions

C) Pull bar (please order separately):
- Fixing bolts

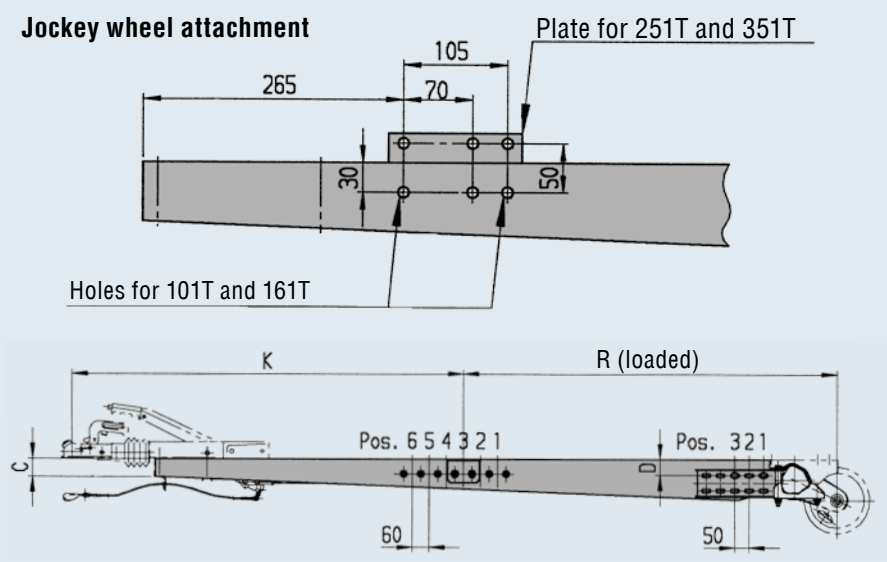



351T

R	K max. permitted acc. to report	matching overrun device top installation Type			Drawbar (pair)	Pull bar with fixing bolts Part no.	Ø mm x length mm x thread length	Towbar connection with fixing bolts for attachment to the axle Part no. (pair)	for axle beam COMPACT and PLUS
885–1175	1820	60S/2	-	50	13	249 434	9x1650x230/90 M10	249 079 1 225 292 249 998 1 225 293	97 Ø; 25° 97 Ø; 5° 80 Ø; 25° 80 Ø; 5°
1030–1425		and 90S/3			14	249 436	9x1800x230/90 M10		
1175–1570					16	249 437	9x1925x230/90 M10		
1325–1720					17	249 439	9x2075x230/90 M10		
835–1225	1820	161 S	-	40	15	249 433	9x1550x230/90 M10	249 079 1 225 292 249 998 1 225 293	97 Ø; 25° 97 Ø; 5° 80 Ø; 25° 80 Ø; 5°
1030–1425					17	249 435	9x1725x230/90 M10		
1520–1915					21	249 440	9x2250x230/90 M10		
835–1225	1800	251S and 251G	-	30	20	249433	9x1550x230/90 M10	249 079 1 225 292 249 998 1 225 293	97 Ø; 25° 97 Ø; 5° 80 Ø; 25° 80 Ø; 5°
1030–1425					23	249 435	9x1725x230/90 M10		
1520–1915					30	249 440	9x2225x230/90 M10		
830-1220	1945	AE 3000	-	20	31	267 364	12x1725x170	249 079 1 225 292 267 022 1 223 528	97 Ø; 25° 97 Ø; 5° 110 Ø; 25° 110 Ø; 5°
1125-1515		251G			34	267 365	12x2025x170		
1320-1710					36	267 366	12x2225x170		
	1945	2.8VB/1-C	-	20	31	267 367	12x1650x170	267 022 1 223 528	110 Ø; 25° 110 Ø; 5°
					34	267 368	12x1950x170		
					36	267 369	12x2150x170		
	1945	AE 3500	-	20	31	267 367	12x1650x170	267 022 1 223 528	110 Ø; 25° 110 Ø; 5°
					34	267 368	12x1950x170		
					36	267 369	12x2150x170		

TOWBAR CONNECTIONS

Calculation diagram and setting values

Drawbar strut
Type 101 T
(Diagram values where
H=11° towbar angle)

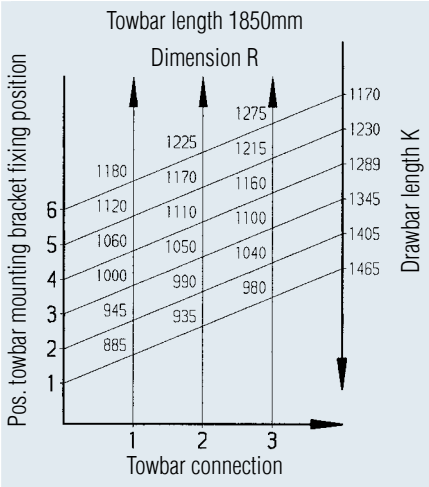

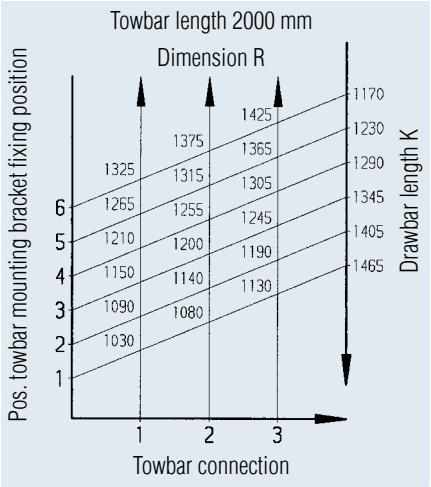

Drawbar strut
Type 161 T / 251 T
(Diagram values where
H=11° towbar angle)

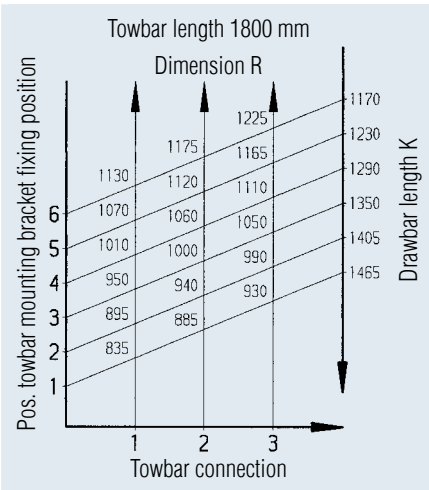

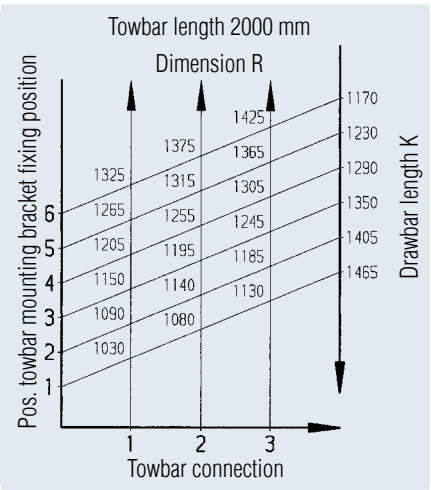

Drawbar strut
Type 351 T
(Diagram values where
H=11° towbar angle)

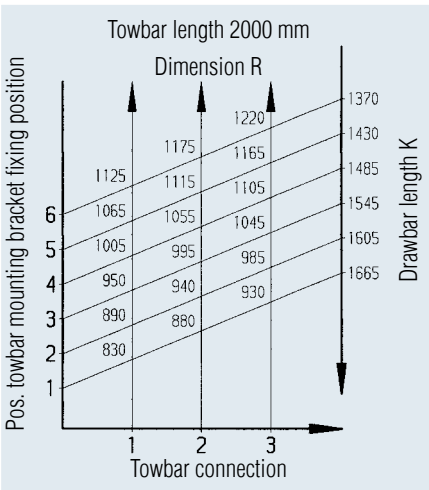

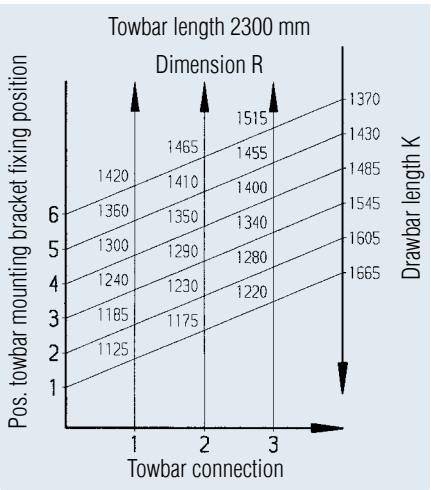

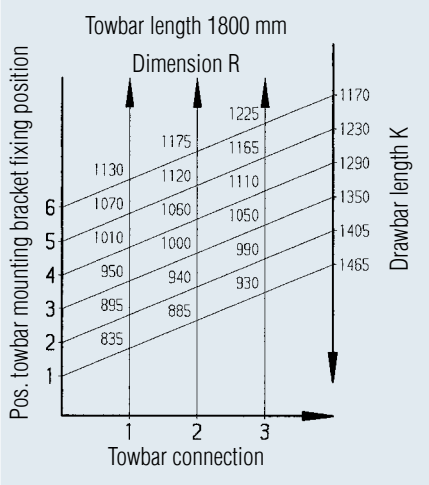

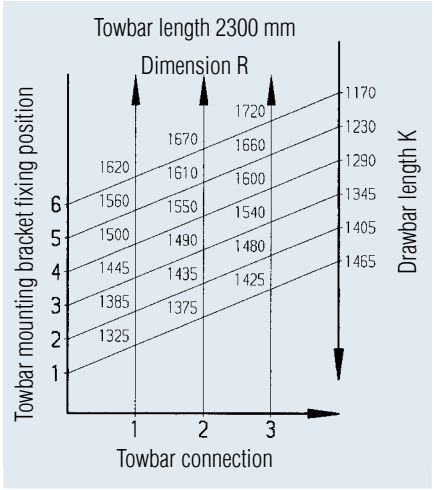

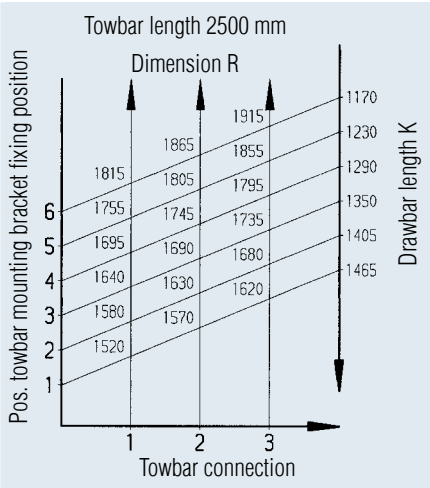



Towbar mounting bracket fixing position

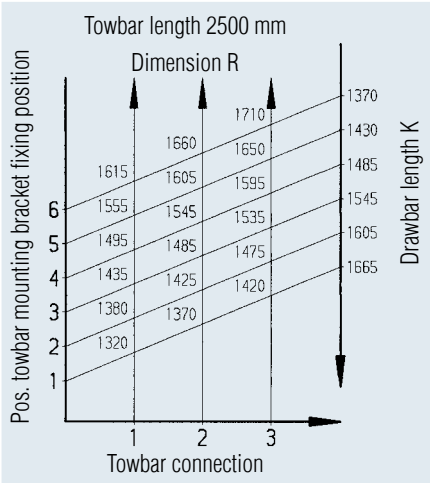



Towbar connection

JOCKEY WHEEL CROSSMEMBER

for towbar connections V up to 3,500 kg

YOUR ADVANTAGE

- No twisting of the towbars if the nose load is exceeded, as was previously sometimes the case with external mounting of the jockey wheel
- Installation of the jockey wheel between the towbars enables safer and easier manoeuvring by hand
- The crossmember adapts to the respective towbar position due to movable fastening brackets
- Delivered pre-assembled, thereby permitting quick and easy installation
- Three standard lengths permit a wide range of mounting positions



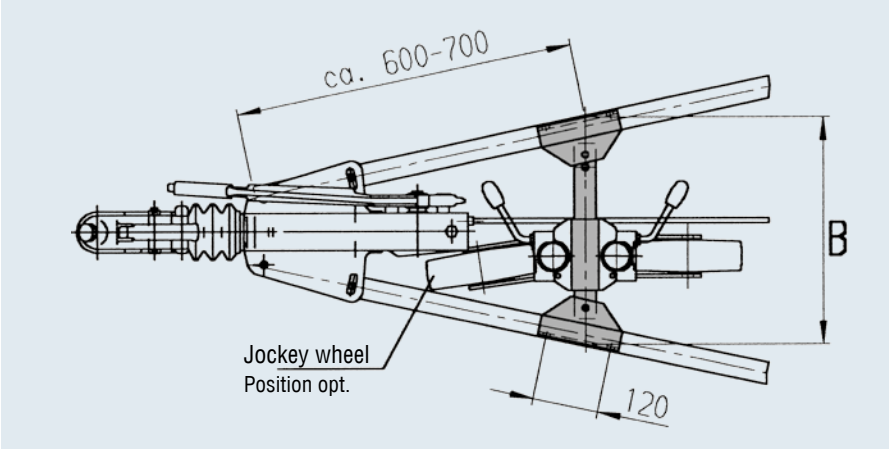

APPLICATION AREA

- A-frame chassis

MOUNTING

The crossmember can be mounted on AL-KO towbar connections (mounting position see diagram). For this purpose, it is necessary to have 2 holes 12.5 or 13 mm each in the neutral area of the towbars (see operating instructions for TÜV authorisation).

Important! Jockey wheel crossmember must make contact with the upper edge of the towbar connection.

The jockey wheel can be installed either before or after the crossmember in the driving direction.



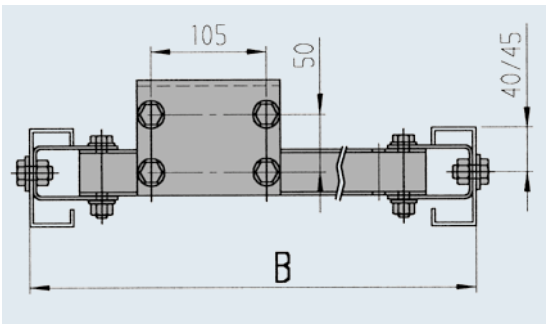

SURFACE TREATMENT

- Hot-dip galvanised, bolts galvanised

SAP: TRAVERSE STÜTZRAD 390-410 KPL

Part no.	Length B mm	Static load max.				
1 212 991	390/410	300 kg	4.71	–	50	10
1 212 992	440/460	300 kg	4.91	–	50	10
1 212 993	515/535	300 kg	5.38	–	50	10

SCOPE OF DELIVERY

- Crossmember with pre-installed fastening brackets and pre-installed counter-flange for clamp Ø 48 mm and Ø 60 mm or AL-KO flange jockey wheel (without packaging).

BRAKE ROD

Brake rod adapter / brake rod holder

SURFACE TREATMENT
- Galvanised

SCOPE OF DELIVERY
complete with fixing bolts
(see technical drawing)

Brake rod Ø 9

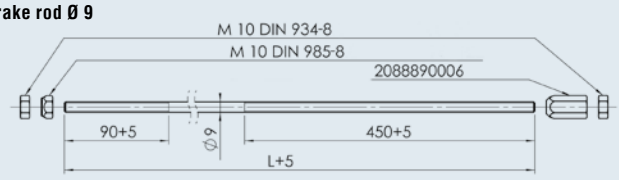

Brake rod Ø 12

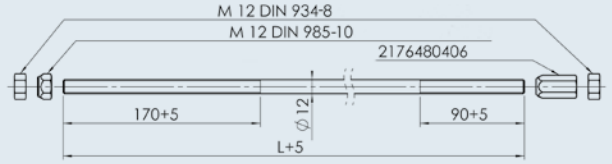

SAP: ZUGSTANGE M10x1550 M MONT TA

Part no.	Ø	Brake rod / thread	Length mm	
1 224 887	Diam. 9	M10	1,550	0.85
1 224 888	Diam. 9	M10	1,900	1.05
1 224 889	Diam. 9	M10	2,250	1.3
1 224 890	Diam. 9	M10	2,600	1.4
1 224 891	Diam. 9	M10	2,950	1.6
1 224 892	Diam. 9	M10	3,300	1.8
1 224 893	Diam. 9	M10	3,650	2.0
1 224 894	Diam. 9	M10	4,000	2.2
240 126	Ø 12	M12	1,975	1.8
240 127	Ø 12	M12	2,450	2.4
240 128	Ø 12	M12	2,950	3.0
240 129	Ø 12	M12	4,000	4.0





SAP: GESTÄNGEADAPTER M12-M10 VERP

Part no.	Brake rod adapter	Perm. gross weight	suitable for
1 224 412	M12 on M10	Up to 2,700 kg	AL-KO overrun devices with M12 rod connection



SURFACE TREATMENT
- Galvanised (front)
- Plastic (rear)

SCOPE OF DELIVERY
(see technical drawing)

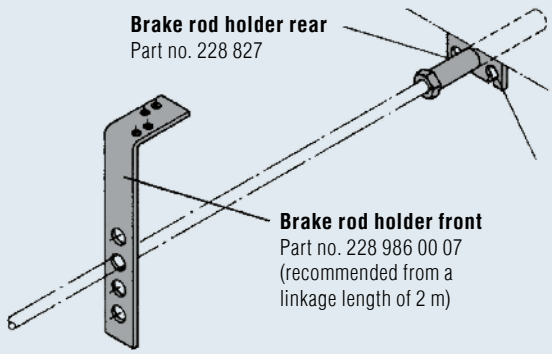

SAP: GESTÄNGEHALTER-FÜHRUNG M10

Part no.	Brake rod holder front	Brake rod holder rear	Brake rod Ø mm	
228 986 00 07	X		Ø 10 and Ø 12	0.2
228 827		X	Ø 10	0.1
288 676 01		X	Ø 12	0.1

OVERRUN DEVICES HEIGHT-ADJUSTABLE VB BASIC AND VB-2 OPTIMA

Product lines / differences / application areas

PROFESSIONALS RELY ON QUALITY FOR LIFE FROM AL-KO

Commercial operators impose demanding requirements on people and machinery. Unproductive time costs money.
This is why machinery and trailers have to operate round the clock.
Manufacturers rely on the experience and expertise
of AL-KO, the leading supplier of chassis for trailers up to
3,500 kg permitted gross weight.

The height-adjustable overrun device can be easily hitched to any car or truck. The quick-change system for different hitches and eyes is available for almost all European country versions.

Height-adjustable hitching heights for overrun devices

Important:

- All figures refer to tyre size 185/75 R 14
- All figures apply to models with curved drawbar section
- All figures apply to the use of axle types B1800/B2000/B2700 with a swing arm length of 175 mm
- All figures have been determined under load (nominal load)
- Permissible deviation in hitching heights according to the Professional Association of Vehicle Operators in Germany less than ± 3° horizontally

Type	Intermediate piece	Hitching height "standard values" mm		
	Length mm	Min.	Max at 0°	Max. at an angle of +3°
AE 161/251/351 VB-2	700	420	1,080	1,210
	600	439	1,003	1,130
	400	474	849	970
AE 161/251/351 VB-2 Optima	700	277	911	1041
	600	286	829	955
	400	303	666	786
AE 160/270 VB Basic	350	320	794	924
AE 350 VB Basic	400	295	819	949

Product line	
Product name	
Suitable for trailers with mobile equipment (so there is no danger of overloading)	
Suitable for professionally used transport trailers (Danger of overloading)	
Suitable for bus trailers	
Max. permitted total weights	
Surface treatment	
Minimum hitch height (guidance values)	
Maximum hitching height (guidance values)	
Hitching far below the loading platform (truck according to standard) without collision	
Park/transport position of the AE at 90°	
Parallel adjustment	
Mounting of the pull rod	
Securing the shock absorber in the pull rod	
Overrun and towing damping	
Mounting of the drawbar eyes	
Time required for changing the hitch components	
One-person height adjustment assisted by a gas spring	
Time requirement for adjusting	
Handbrake lever ergonomics	
Handbrake lever release force forwards	
Handbrake lever release force backwards	
Roll-away protection with trailer on an up-slope (incompletely pulled handbrake)	
Number of teeth on the upper and lower adjusting point (areas exposed to high load)	
Drawbar section	
Linkage routed protected in the drawbar section	
Force transmission from overrun hitch to drawbar section	

APPLICATION EXAMPLES

Light tower, generator, compressor,
high-pressure cleaner, mortar pumps,
mini diggers and lifting platforms





BASIC ★	PREMIUM PROFI ★ ★ ★
Overrun device height-adjustable VB BASIC	Overrun device height-adjustable VB-2 OPTIMA
Yes	Yes
Less suitable. However, the system meets legal requirements	Suitable. The system provides a high level of stability and safety, and can cope with short-term overload situations as well
No. The bus trailer has requirements that are significantly greater than the statutory specifications	Suitable
1,600 kg, 2,700 kg, 3,500 kg	1,600 kg, 2,700 kg, 3,500 kg
Black primed, choice of galvanised	Hot-dip galvanised and chrome VI-free
approx. 320 mm	approx. 300 mm
approx. 920 mm	approx. 1,040 mm
Possible	Possible
Possible (without additional disconnection of screwed connections)	No
No	Yes. This means the AE always remains in a horizontal position when adjusting.
Low-wear grey cast-iron mounting with minimum play and easy to exchange	Low-wear grey cast-iron mounting with minimum play and easy to exchange
Separate by a clamping pin. This means the shock absorber cannot move out when the bolts are removed	Separate by a clamping pin. This means the shock absorber cannot move out when the bolts are removed
Yes	Yes
External mounting. The eyes can be pushed onto the pull rod from the front	External mounting. The eyes can be pushed onto the pull rod from the front
Guide value approx. 2 minutes	Guide value approx. 2 minutes
No	Yes
Guide value approx. 2 minutes	Guide value approx. 2 minutes
Restricted. The lever must be pressed and pushed to release	Very good. Slack point lever without pushbutton, body weight can be used.
approx. 25-30 kg	approx. 20-25 kg
30-45 kg	25-35 kg
The gas spring handbrake lever increases the tension automatically. No rolling away (comply with operating instructions)	The slack point handbrake lever automatically increases the tension. No rolling away (comply with operating instructions)
1 pair	2 pairs = reinforced version
Sturdy rectangular section	Sturdy rectangular section
Yes	Yes
Relay lever, Bowden cable i.e. good efficiency	Relay lever, linkage i.e. very good efficiency



HEIGHT-ADJUSTABLE OVERRUN DEVICES VB-2 OPTIMA

For professionally used transport trailers





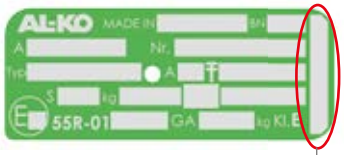

RB 2051 I RB 2361 I RB 3081

TYPE PLATE

The respective AL-KO wheel brake with which this overrun device can be combined is listed in this field

MODERN, ROBUST TECHNOLOGY WITH STURDY RECTANGULAR SECTION

- One-person height adjustment assisted by a gas spring
- Two pairs of toothed lock washers reinforce the highly stressed adjustment range at the top and bottom
- Easy-extending telescopic handbrake lever (AL-KO patent) without pushbutton, i.e. easily adjusted
- The flat construction of the overrun device permits:
  – Minimum hitching height of approx. 280 mm
  – Low hitching under the truck loading platform
- The spring pack for the handbrake lever and the brake rod is positioned protected in the drawbar section
- Quick-change system drawbar eyes for almost all European country versions
- Range: 1,600 kg, 2,700 kg, 3,500 kg
- Surface treatment: hot-dip galvanised

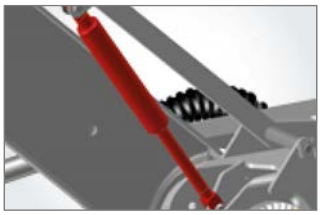

GAS SPRING

permits one-person height adjustment



ADJUSTMENT RANGE TOP

reinforced by two pairs of toothed lock washers

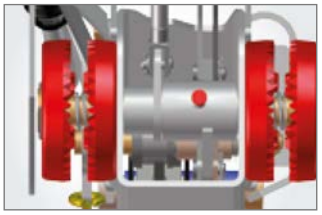

ADJUSTMENT RANGE BOTTOM

reinforced by two pairs of toothed lock washers

RECTANGULAR SECTION

robust and sturdy technology

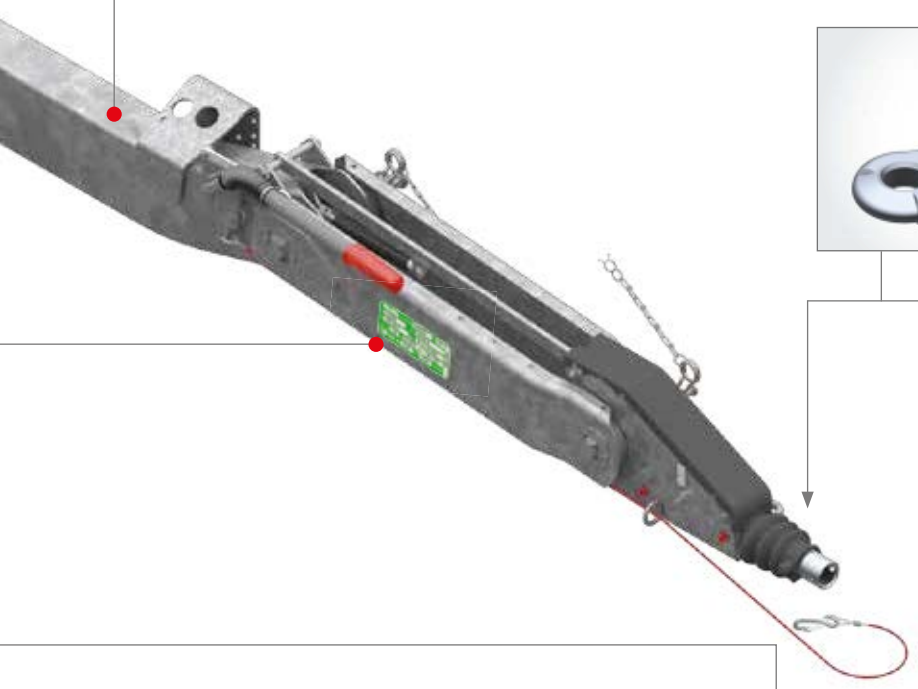





QUICK-CHANGE SYSTEM

for different hitches and eyes

HANDBRAKE LEVER

easily adjustable without pushbutton

FLAT DESIGN

makes low hitching possible

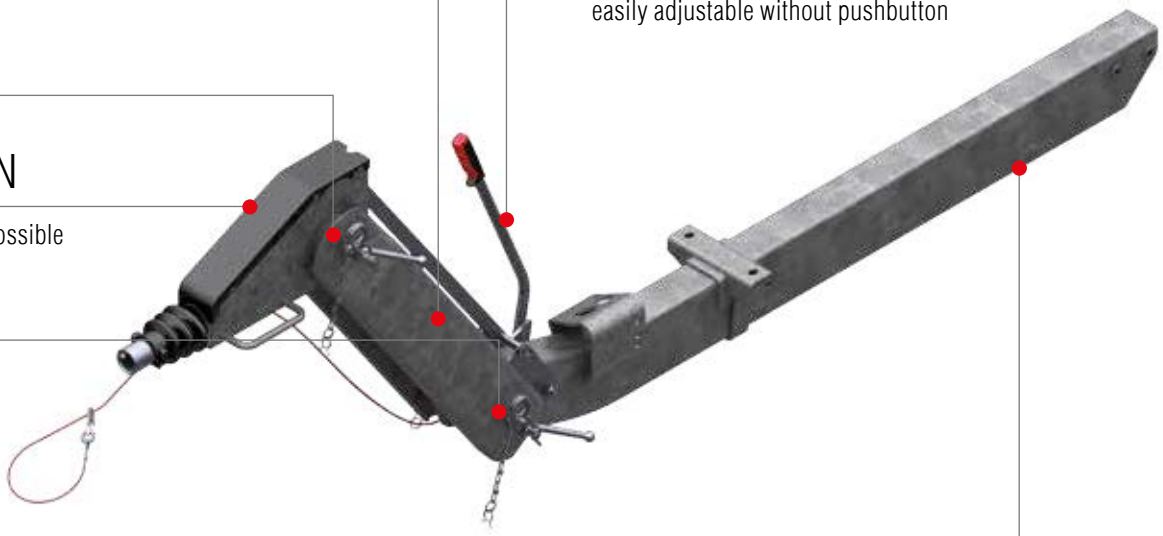

BRAKE ROD ROUTING

protected in the drawbar section

HEIGHT-ADJUSTABLE OVERRUN DEVICES

161 VB-2 OPTIMA with drawbar section cranked 850 to 1,600 kg

TECHNOLOGY

Type overrun device 161 VB-2 OPTIMA

Intermediate piece with drawbar section 162 VB-2 OPTIMA

Permissible nose load with DIN eye 100 kg

with coupling head 100 kg

ECE test report no.:

Overrun device: 361-117-12

ECE type approval no.:

Drawbar installation: E1 55R-01 1157

Changeover relay lever:

☐ Yes ☒ No



SAP: AE ZHSB 161VB-2 OPTIMA M DEICHSPR

Overrun device cpl. with drawbar section mounted (without hitch components)

Intermediate piece in mm	Drawbar length E in mm Cranked	Total length K at -5° DIN drawbar eye Cranked	AE cpl. with drawbar section For wheel brake 1637/2051 Cranked	AE cpl. with drawbar section for wheel brake 2361 Cranked				
700	1,250	2,552	200 591 01	200 591 24	74	–	3	10
700	1,330	2,632	200 591 02	200 591 25	75	–	3	10
700	1,410	2,712	200 591 03	200 591 26	76	–	3	10
700	1,490	2,792	200 591 04	200 591 27	77	–	3	10
700	1,570	2,872	200 591 05	200 591 28	78	–	3	10
700	1,650	2,952	200 591 06	200 591 29	80	–	3	10
700	1,730	3,032	200 591 07	200 591 30	81	–	3	10
700	1,810	3,112	200 591 08	200 591 31	82	–	3	10
700	1,890	3,192	200 591 09	200 591 32	83	–	3	10
700	1,970	3,272	200 591 10	200 591 33	84	–	3	10
700	2,050	3,352	200 591 11	200 591 34	85	–	3	10
700	2,130	3,432	200 591 12	200 591 35	87	–	3	10
700	2,210	3,512	200 591 13	200 591 36	88	–	3	10
700	2,290	3,592	200 591 14	200 591 37	89	–	3	10
700	2,370	3,672	200 591 15	200 591 38	90	–	3	10
700	2,450	3,752	200 591 16	200 591 39	91	–	3	10
700	2,530	3,832	200 591 17	200 591 40	92	–	3	10
700	2,610	3,912	200 591 18	200 591 41	93	–	3	10
700	2,690	3,992	200 591 19	200 591 42	95	–	3	10
700	2,770	4,072	200 591 20	200 591 43	96	–	3	10
700	2,850	4,152	200 591 21	200 591 44	97	–	3	10
600	1,250	2,453	200 591 22	200 591 45	71	–	3	10
400	1,250	2,253	200 591 23	200 591 46	65	–	3	10

Push-on hitch components: Drawbar eyes nose load 100 kg, connection D50 / 161 VB

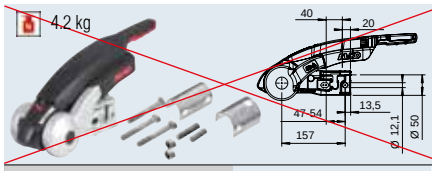

Hitch AKS™ 3004 CANNOT BE USED

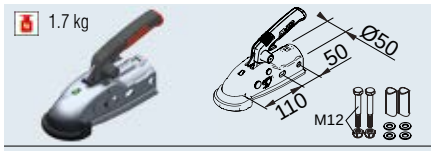

SAP: KUPLNG KUGL AK161 D50 M MONTTEILE

Ball hitch AK 161 - Ø 50 **Part no.** 1 730 808

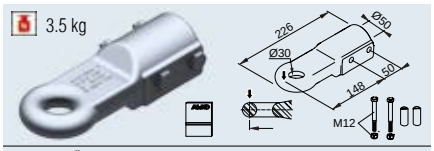

SAP: ZUGÖSE E30 M SCHRAUBMAT VZ

Drawbar eye UK E30/A **Part no.** 1 224 106

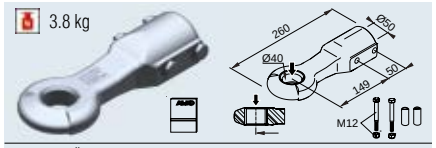

SAP: ZUGÖSE D40 M SCHRAUBMAT VZ

Drawbar eye DIN D40/F **Part no.** 1 213 350

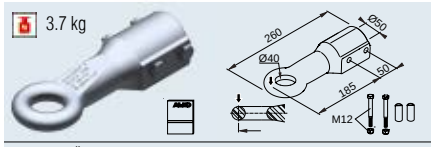

SAP: ZUGÖSE E40 M SCHRAUBMAT VZ

Drawbar eye UK E40/A **Part no.** 1 224 107

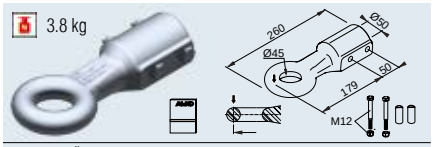

SAP: ZUGÖSE I45 M SCHRAUBMAT VZ

Drawbar eye Italy I45/F **Part no.** 1 224 108

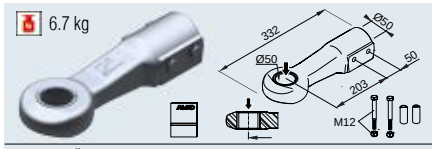

SAP: ZUGÖSE D50 M SCHRAUBMAT VZ

Drawbar eye DIN D50 **Part no.** 1 730 612

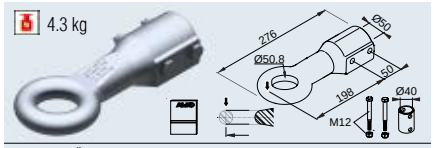

SAP: ZUGÖSE E50 M SCHRAUBMAT VZ

Drawbar eye UK E50/A **Part no.** 1 224 109

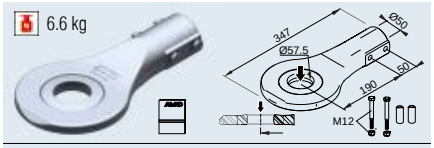

SAP: ZUGÖSE SCHWEDEN M SCHRAUBMAT AUSF A

Drawbar eye Sweden VBG 57.5 **Part no.** 1 225 076

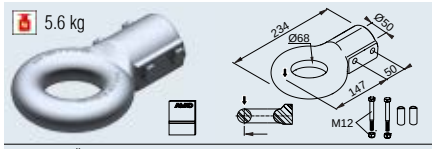

SAP: ZUGÖSE F68 M SCHRAUBMAT VZ

Drawbar eye France F68/E **Part no.** 1 224 110

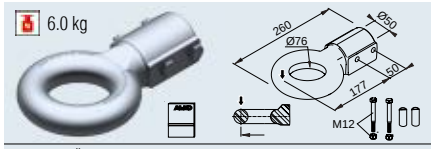

SAP: ZUGÖSE N76 M SCHRAUBMAT VZ

Drawbar eye NATO N76/E **Part no.** 1 224 111

Overrun device cpl. with drawbar section mounted (without hitch components)

Jockey wheel flange
101 VB
161 VB
251 VB

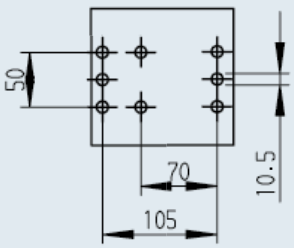

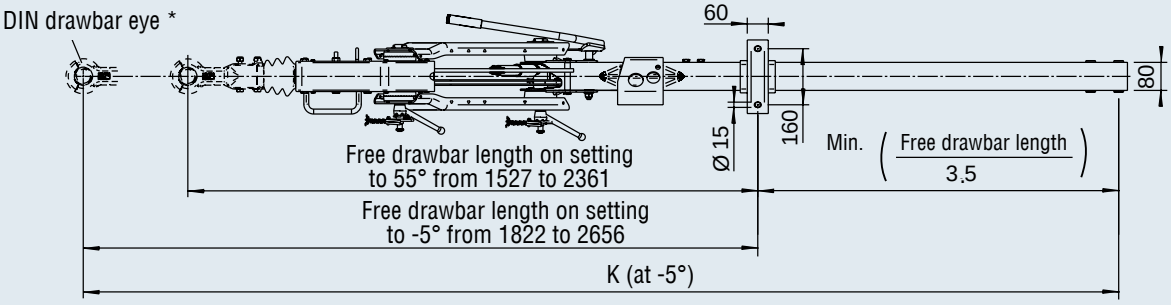

* = DIN drawbar eye (the dimensions must be recalculated for other hitch components)

HEIGHT-ADJUSTABLE OVERRUN DEVICES

251 VB-2 OPTIMA with drawbar section cranked 1,425 to 2,700 kg

TECHNOLOGY

Type overrun device 251 VB-2 OPTIMA

Intermediate piece with drawbar section 252 VB-2 OPTIMA

Permissible nose load with DIN eye 120 kg

with coupling head 120 kg

ECE test report no.:

Overrun device: 361-036-12

ECE type approval no.:

Drawbar installation: E1 55R-01 1158

Changeover relay lever:

☐ Yes ☒ No



SAP: AE ZSHB 251VB-2 OPTIMA M DEICHSPR

Overrun device cpl. with drawbar section mounted (without hitch components)

Intermediate piece in mm	Drawbar length E in mm Cranked	Total length K at -5° DIN drawbar eye Cranked	AE cpl. with drawbar section for wheel brake 1637/2051 Cranked	AE cpl. with drawbar section for wheel brake 2361 Cranked	AE cpl. with drawbar section for wheel brake 3081/3062 Cranked				
700	1,250	2,552	200 593 01	200 593 24	200 593 47	90	–	3	10
700	1,330	2,632	200 593 02	200 593 25	200 593 48	92	–	3	10
700	1,410	2,712	200 593 03	200 593 26	200 593 49	93	–	3	10
700	1,490	2,792	200 593 04	200 593 27	200 593 50	95	–	3	10
700	1,570	2,872	200 593 05	200 593 28	200 593 51	97	–	3	10
700	1,650	2,952	200 593 06	200 593 29	200 593 52	98	–	3	10
700	1,730	3,032	200 593 07	200 593 30	200 593 53	100	–	3	10
700	1,810	3,112	200 593 08	200 593 31	200 593 54	102	–	3	10
700	1,890	3,192	200 593 09	200 593 32	200 593 55	103	–	3	10
700	1,970	3,272	200 593 10	200 593 33	200 593 56	105	–	3	10
700	2,050	3,352	200 593 11	200 593 34	200 593 57	107	–	3	10
700	2,130	3,432	200 593 12	200 593 35	200 593 58	109	–	3	10
700	2,210	3,512	200 593 13	200 593 36	200 593 59	110	–	3	10
700	2,290	3,592	200 593 14	200 593 37	200 593 60	112	–	3	10
700	2,370	3,672	200 593 15	200 593 38	200 593 61	114	–	3	10
700	2,450	3,752	200 593 16	200 593 39	200 593 62	115	–	3	10
700	2,530	3,832	200 593 17	200 593 40	200 593 63	117	–	3	10
700	2,610	3,912	200 593 18	200 593 41	200 593 64	119	–	3	10
700	2,690	3,992	200 593 19	200 593 42	200 593 65	120	–	3	10
700	2,770	4,072	200 593 20	200 593 43	200 593 66	122	–	3	10
700	2,850	4,152	200 593 21	200 593 44	200 593 67	124	–	3	10
600	1,250	2,453	200 593 22	200 593 45	200 593 68	87	–	3	10
400	1,250	2,253	200 593 23	200 593 46	200 593 69	80	–	3	10

Push-on hitch components: Drawbar eye nose load 120 kg, connection D50 / 251 VB

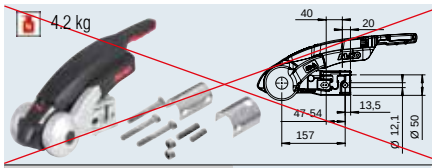

Hitch AKS™ 3004 CANNOT BE USED

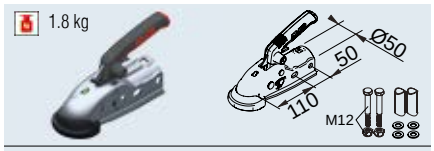

SAP: KUPLNG KUGL AK161 D50 M MONTTEILE

Ball hitch AK 270 - Ø 50 **Part no.** 1 730 812

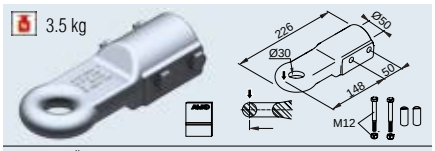

SAP: ZUGÖSE E30 M SCHRAUBMAT VZ

Drawbar eye UK E30/A **Part no.** 1 224 106

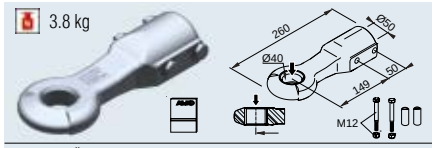

SAP: ZUGÖSE D40 M SCHRAUBMAT VZ

Drawbar eye DIN D40/F **Part no.** 1 213 350

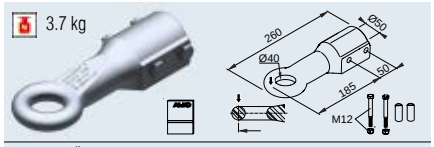

SAP: ZUGÖSE E40 M SCHRAUBMAT VZ

Drawbar eye UK E40/A **Part no.** 1 224 107

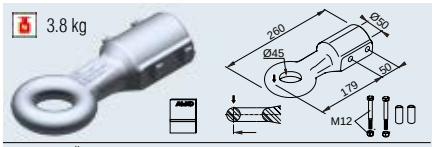

SAP: ZUGÖSE I45 M SCHRAUBMAT VZ

Drawbar eye Italy I45/F **Part no.** 1 224 108

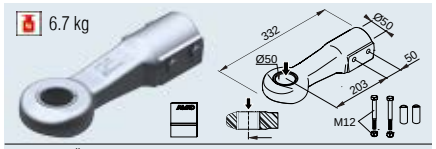

SAP: ZUGÖSE D50 M SCHRAUBMAT VZ

Drawbar eye DIN D50 **Part no.** 1 730 612

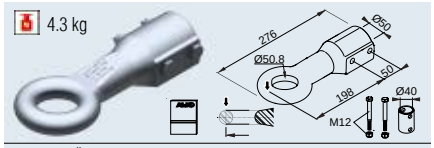

SAP: ZUGÖSE E50 M SCHRAUBMAT VZ

Drawbar eye UK E50/A **Part no.** 1 224 109

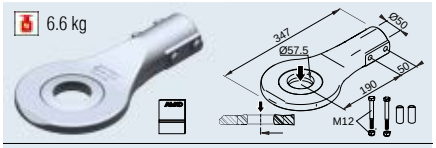

SAP: ZUGÖSE SCHWEDEN M SCHRAUBMAT AUSF A

Drawbar eye Sweden VBG 57.5 **Part no.** 1 225 076

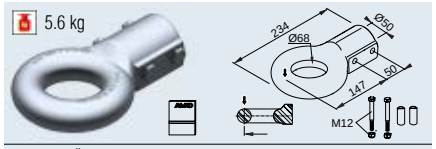

SAP: ZUGÖSE F68 M SCHRAUBMAT VZ

Drawbar eye France F68/E **Part no.** 1 224 110

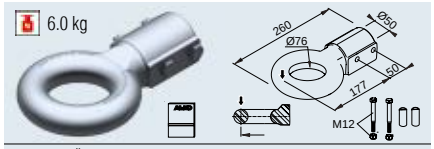

SAP: ZUGÖSE N76 M SCHRAUBMAT VZ

Drawbar eye NATO N76/E **Part no.** 1 224 111

Overrun device cpl. with drawbar section mounted (without hitch components)

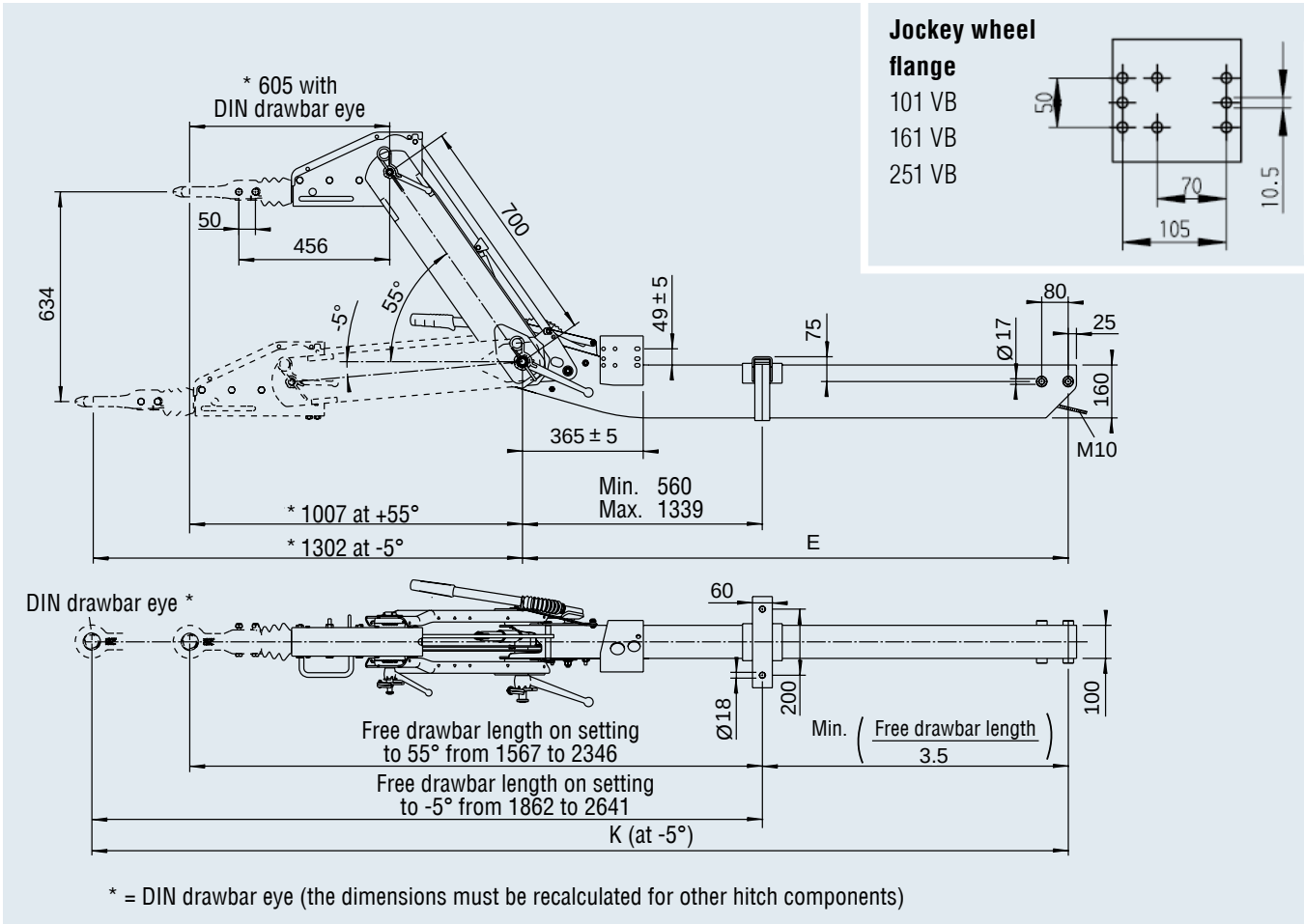

Jockey wheel flange
101 VB
161 VB
251 VB

* = DIN drawbar eye (the dimensions must be recalculated for other hitch components)

HEIGHT-ADJUSTABLE OVERRUN DEVICES

351 VB-2 OPTIMA with drawbar section cranked 2,500 to 3,500 kg

TECHNOLOGY

Type overrun device 351 VB-2 OPTIMA

Intermediate piece with drawbar section 352 VB-2 OPTIMA

Permissible nose load with DIN eye 350 kg

with coupling head 350 kg

ECE test report no.:

Overrun device: 361-118-12

ECE type approval no.:

Drawbar installation: E1 55R-01 1233

Changeover relay lever:

☐ Yes ☒ No



SAP: AE ZSHB 351-2 OPTIMA M DEICHSPR

Overrun device cpl. with drawbar section mounted (without hitch components)

Intermediate piece in mm	Drawbar length E in mm Cranked	Total length K at -5° DIN drawbar eye Cranked	AE cpl. with drawbar section for wheel brake 2051 Cranked	AE cpl. with drawbar section for wheel brake 2361 Cranked	AE cpl. with drawbar section for wheel brake 3081/3062 Cranked				
700	1,410	2,845	200 595 43	200 595 01	200 595 22	132	–	3	10
700	1,490	2,925	200 595 44	200 595 02	200 595 23	134	–	3	10
700	1,570	3,005	200 595 45	200 595 03	200 595 24	136	–	3	10
700	1,650	3,085	200 595 46	200 595 04	200 595 25	138	–	3	10
700	1,730	3,165	200 595 47	200 595 05	200 595 26	140	–	3	10
700	1,810	3,245	200 595 48	200 595 06	200 595 27	143	–	3	10
700	1,890	3,325	200 595 49	200 595 07	200 595 28	145	–	3	10
700	1,970	3,405	200 595 50	200 595 08	200 595 29	147	–	3	10
700	2,050	3,485	200 595 51	200 595 09	200 595 30	149	–	3	10
700	2,130	3,565	200 595 52	200 595 10	200 595 31	151	–	3	10
700	2,210	3,645	200 595 53	200 595 11	200 595 32	154	–	3	10
700	2,290	3,725	200 595 54	200 595 12	200 595 33	156	–	3	10
700	2,370	3,805	200 595 55	200 595 13	200 595 34	158	–	3	10
700	2,450	3,885	200 595 56	200 595 14	200 595 35	160	–	3	10
700	2,530	3,965	200 595 57	200 595 15	200 595 36	162	–	3	10
700	2,610	4,045	200 595 58	200 595 16	200 595 37	165	–	3	10
700	2,690	4,125	200 595 59	200 595 17	200 595 38	167	–	3	10
700	2,770	4,205	200 595 60	200 595 18	200 595 39	169	–	3	10
700	2,850	4,285	200 595 61	200 595 19	200 595 40	171	–	3	10
600	1,410	2,746	–	200 595 20	200 595 41	128	–	3	10
400	1,410	2,546	–	200 595 21	200 595 42	118	–	3	10

Push-on hitch components: Drawbar eyes nose load 350 kg, connection D60 / 351 VB

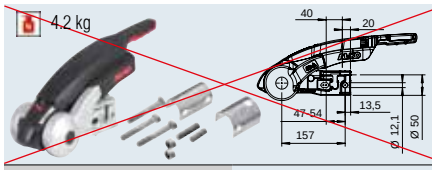

Hitch AKS™ 3004 CANNOT BE USED



SAP: KUPLNG KUGL AK351 M MONTTEILE

Ball hitch AK 351 - Ø 60 **Part no.** 1 224 391

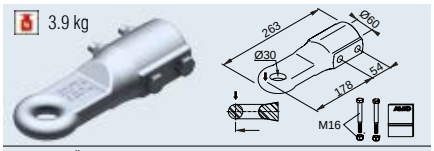

SAP: ZUGÖSE E30 M SCHRAUBMAT VZ

Drawbar eye UK E30/B **Part no.** 1 224 112

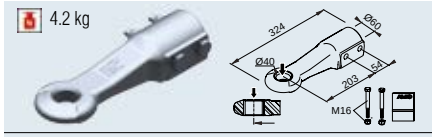

SAP: ZUGÖSE D40 M SCHRAUBMAT VZ

Drawbar eye DIN D40/G **Part no.** 1 224 114

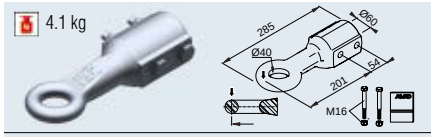

SAP: ZUGÖSE E40 M SCHRAUBMAT VZ

Drawbar eye UK E40/B **Part no.** 1 224 113

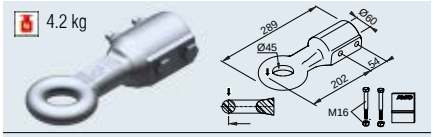

SAP: ZUGÖSE I45 M SCHRAUBMAT VZ

Drawbar eye Italy I45/G **Part no.** 1 224 115

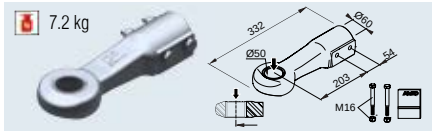

SAP: ZUGÖSE D50 M SCHRAUBMAT VZ

Drawbar eye DIN D50 **Part no.** 1 730 613

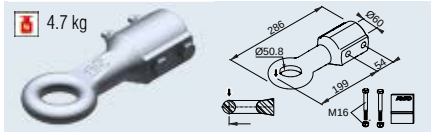

SAP: ZUGÖSE E50 M SCHRAUBMAT VZ

Drawbar eye UK E50/B **Part no.** 1 224 116

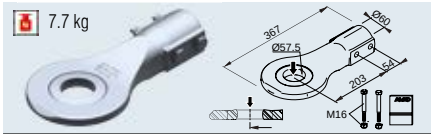

SAP: ZUGÖSE SCHWEDEN M SCHRAUBMAT AUSF B

Drawbar eye Sweden VBG 57.5 **Part no.** 1 225 077

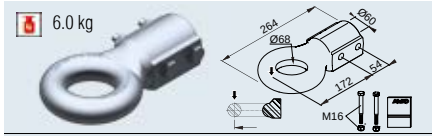

SAP: ZUGÖSE F68 M SCHRAUBMAT VZ

Drawbar eye France F68/F **Part no.** 1 224 117

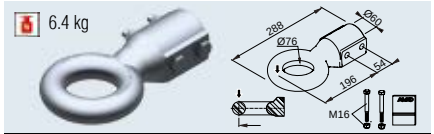

SAP: ZUGÖSE N76 M SCHRAUBMAT VZ

Drawbar eye NATO N76/F **Part no.** 1 224 118

Overrun device cpl. with drawbar section mounted (without hitch components)

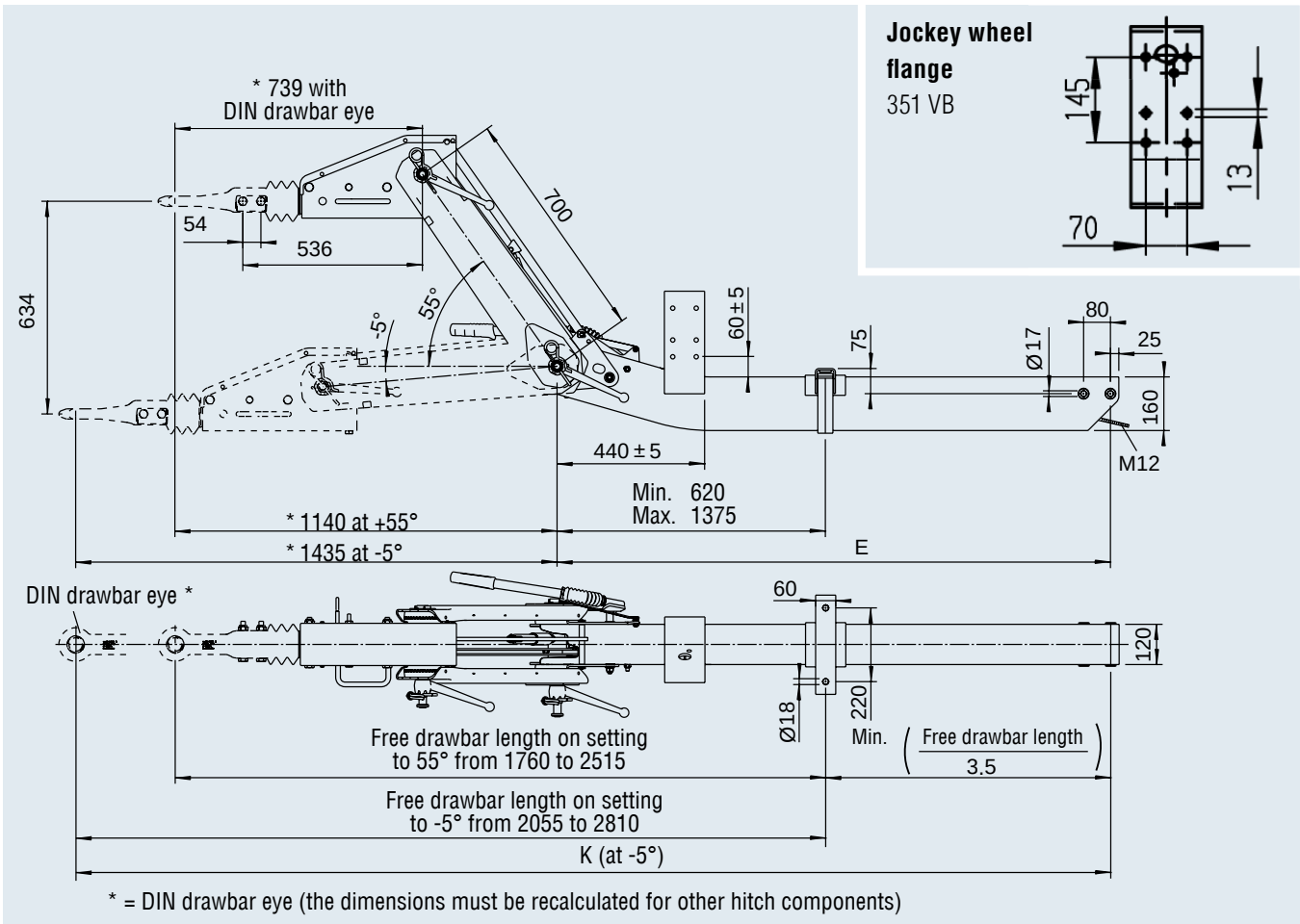

Jockey wheel flange
351 VB

OVERRUN DEVICES HEIGHT-ADJUSTABLE VB BASIC

for trailers with mobile equipment

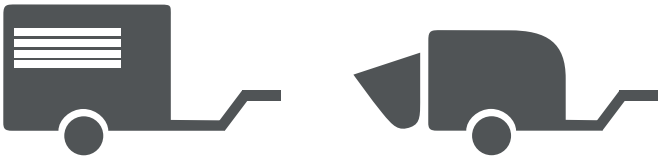

PROVEN TECHNOLOGY WITH INTERMEDIATE PIECE ROUND TUBE AND WELDED-IN TOOTH HEAD

- The flat construction of the overrun device permits:
  – Minimum hitching height of approx. 280 mm
  – Low hitching under the truck loading platform
- Brake rod routing protected in the drawbar section
- Quick-change system drawbar eyes for almost all European country versions
- Optimum force transmission by AL-KO Bowden cables
- Range: 1600 kg, 2700 kg, 3500 kg
- Surface treatment:
  either black primed or galvanised

Hole pattern for jockey wheel

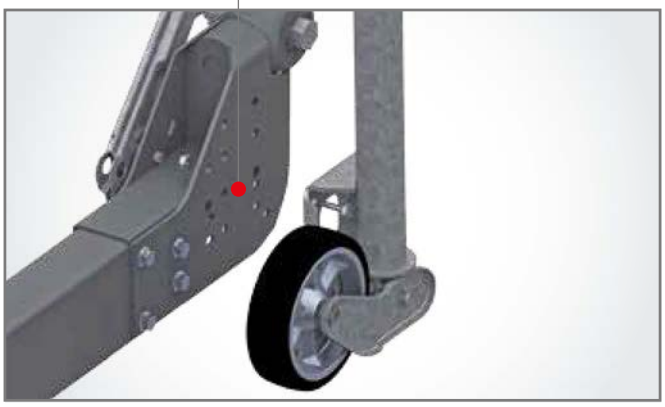

STANDARD MOUNTING HOLES FOR THE JOCKEY WHEEL

Mounting holes for the jockey wheel are already provided on the adapter, see hole pattern.

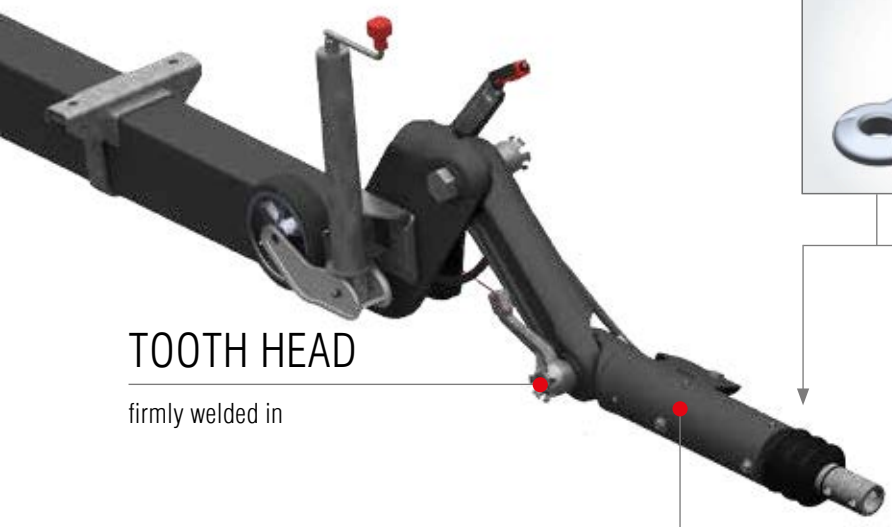

TOOTH HEAD

firmly welded in

FLAT DESIGN

makes low hitching possible



QUICK-CHANGE SYSTEM

for 11 different hitches and eyes.

BOWDEN CABLE

For optimum force transmission

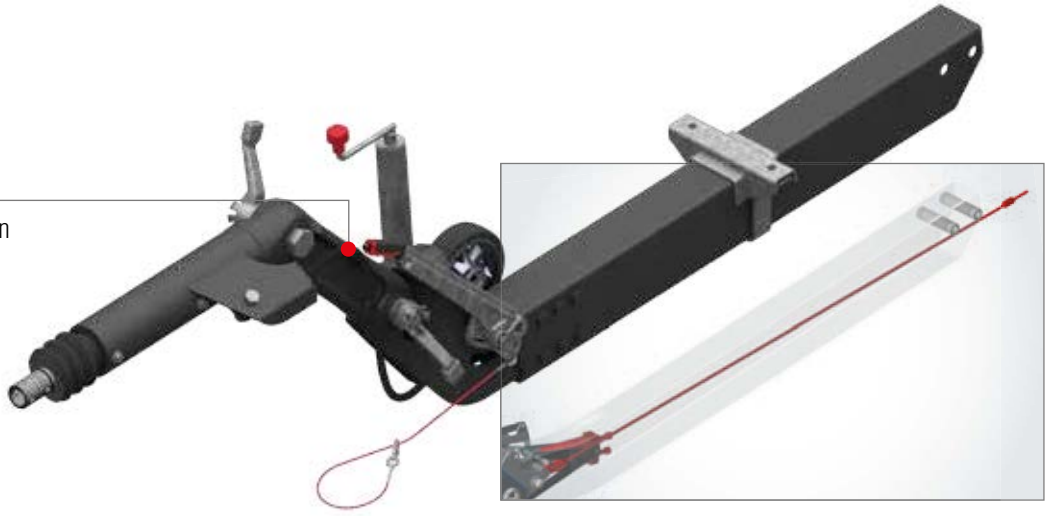

BRAKE ROD ROUTING

protected in the drawbar section

HEIGHT-ADJUSTABLE OVERRUN DEVICES

160 VB BASIC with drawbar section 850 to 1,600 kg

TECHNOLOGY

Type overrun device 160 VB BASIC, 1,600 kg

Intermediate piece with drawbar section 160 VB BASIC, 1,600 kg

Permissible nose load with DIN drawbar eye 100 kg

with coupling head 100 kg

ECE test report no.:

Overrun device: 361-068-14

ECE type approval no.:

Drawbar installation: E1 55R-01 2489

Changeover relay lever:

☒ Yes ☐ No



SAP: AE ZKF 160VB BASIC M DEICHSPR

Overrun device cpl. with drawbar section mounted (without hitch components)

Drawbar length E in mm	Total length K at 0° DIN drawbar eye	AE cpl. with drawbar section for wheel brake 1637 / 2051	AE cpl. with drawbar section for wheel brake 2361				
1,310	2,418	200 597 01	200 597 23	61.3	–	3	20
1,390	2,498	200 597 02	200 597 24	61.7	–	3	20
1,470	2,578	200 597 03	200 597 25	62.0	–	3	20
1,550	2,658	200 597 04	200 597 26	62.3	–	3	20
1,630	2,738	200 597 05	200 597 27	62.6	–	3	20
1,710	2,818	200 597 06	200 597 28	63.0	–	3	20
1,790	2,898	200 597 07	200 597 29	63.3	–	3	20
1,870	2,978	200 597 08	200 597 30	63.6	–	3	20
1,950	3,058	200 597 09	200 597 31	63.9	–	3	20
2,030	3,138	200 597 10	200 597 32	64.3	–	3	20
2,110	3,218	200 597 11	200 597 33	64.6	–	3	20
2,190	3,298	200 597 12	200 597 34	64.9	–	3	20
2,270	3,378	200 597 13	200 597 35	65.2	–	3	20
2,350	3,458	200 597 14	200 597 36	65.6	–	3	20
2,430	3,538	200 597 15	200 597 37	65.9	–	3	20
2,510	3,618	200 597 16	200 597 38	66.2	–	3	20
2,590	3,698	200 597 17	200 597 39	66.5	–	3	20
2,670	3,778	200 597 18	200 597 40	66.9	–	3	20
2,750	3,858	200 597 19	200 597 41	67.2	–	3	20
2,830	3,938	200 597 20	200 597 42	67.5	–	3	20
2,910	4,018	200 597 21	200 597 43	67.8	–	3	20
2,990	4,098	200 597 22	200 597 44	68.2	–	3	20

Push-on hitch components: Drawbar eyes nose load 100 kg, connection D50 / 160 VB

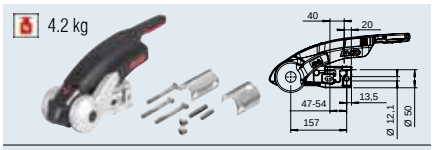

SAP: AKS3004 VERP GA 3000 FL

Hitch AKS™ 3004 — **Part no.** 1 225 158

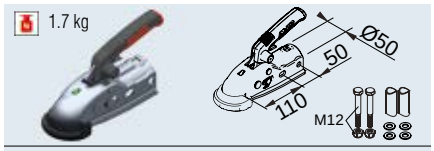

SAP: KUPLNG KUGL AK161 D50 M MONTTEILE

Ball hitch AK 161 - Ø 50 — **Part no.** 1 730 808

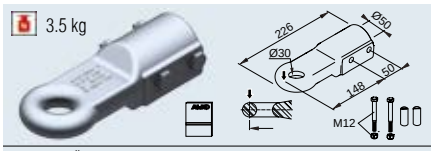

SAP: ZUGÖSE E30 M SCHRAUBMAT VZ

Drawbar eye UK E30/A — **Part no.** 1 224 106

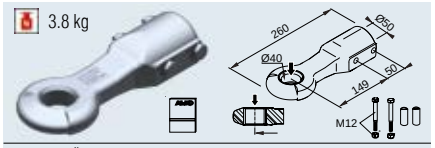

SAP: ZUGÖSE D40 M SCHRAUBMAT VZ

Drawbar eye DIN D40/F — **Part no.** 1 213 350

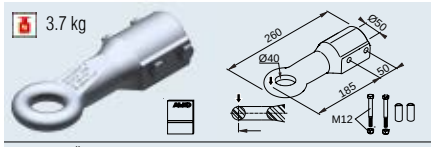

SAP: ZUGÖSE E40 M SCHRAUBMAT VZ

Drawbar eye UK E40/A — **Part no.** 1 224 107

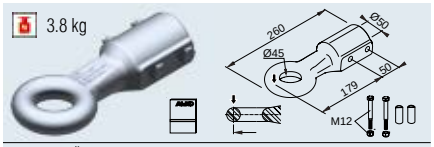

SAP: ZUGÖSE I45 M SCHRAUBMAT VZ

Drawbar eye Italy I45/F — **Part no.** 1 224 108

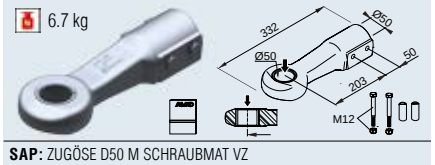

SAP: ZUGÖSE D50 M SCHRAUBMAT VZ

Drawbar eye DIN D50 — **Part no.** 1 730 612

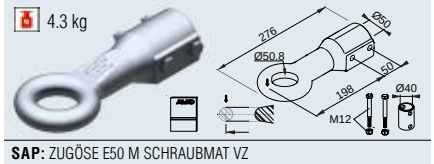

SAP: ZUGÖSE E50 M SCHRAUBMAT VZ

Drawbar eye UK E50/A — **Part no.** 1 224 109

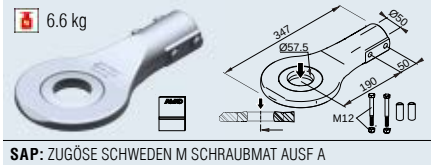

SAP: ZUGÖSE SCHWEDEN M SCHRAUBMAT AUSF A

Drawbar eye Sweden VBG 57.5 — **Part no.** 1 225 076

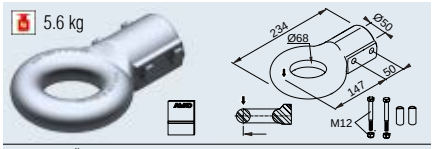

SAP: ZUGÖSE F68 M SCHRAUBMAT VZ

Drawbar eye France F68/E — **Part no.** 1 224 110

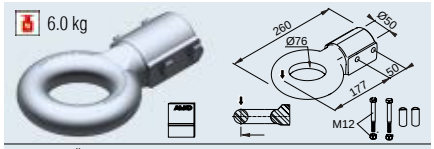

SAP: ZUGÖSE N76 M SCHRAUBMAT VZ

Drawbar eye NATO N76/E — **Part no.** 1 224 111

Overrun device cpl. with drawbar section mounted (without hitch components)

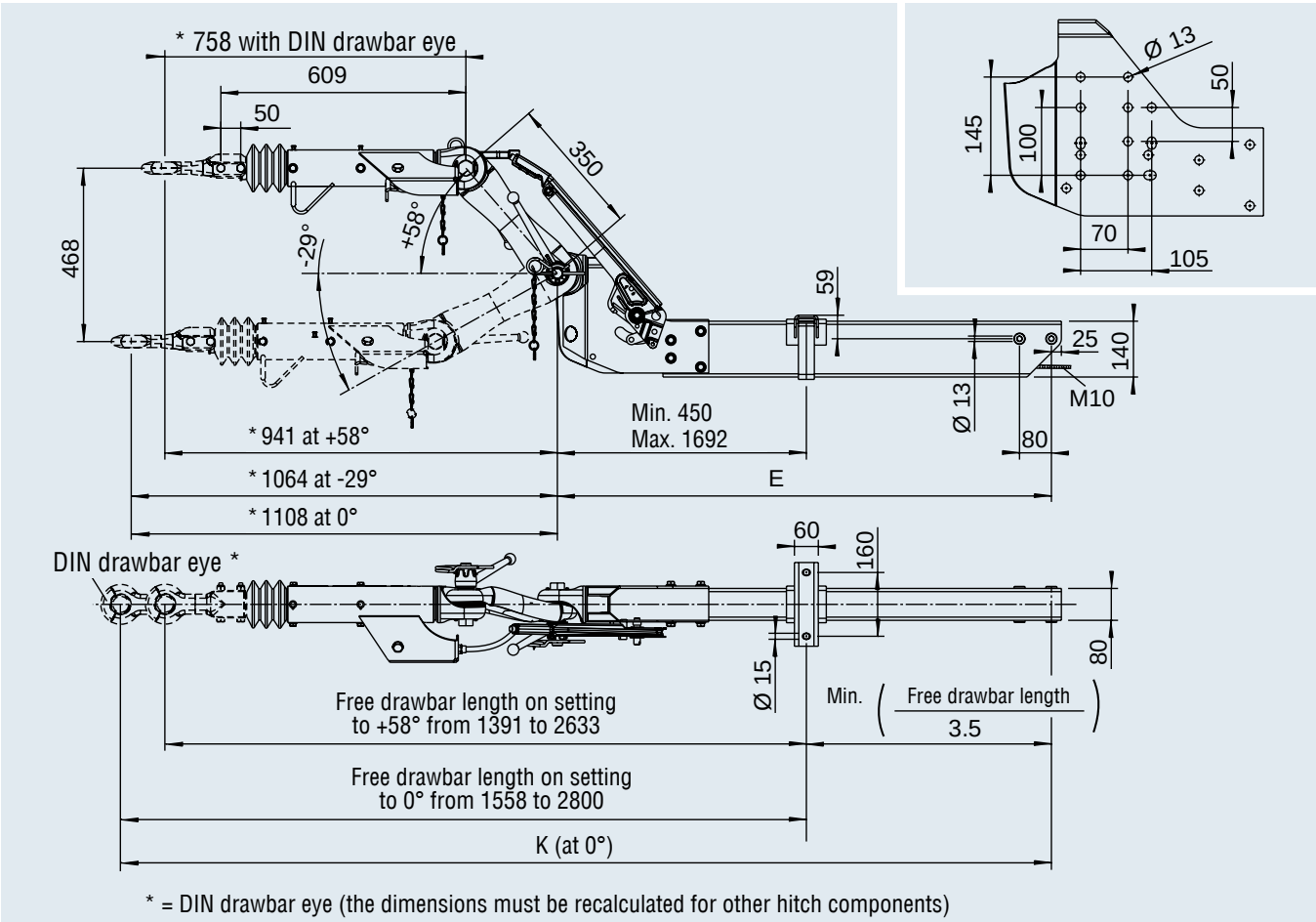

* = DIN drawbar eye (the dimensions must be recalculated for other hitch components)

HEIGHT-ADJUSTABLE OVERRUN DEVICES

270 VB BASIC with drawbar section 1,425 to 2,700 kg

TECHNOLOGY

Type overrun device 270 VB BASIC, 2,700 kg

Intermediate piece with drawbar section 270 VB BASIC, 2,700 kg

Permissible nose load with DIN drawbar eye 120 kg

with coupling head 120 kg

ECE test report no.:

Overrun device: 361-069-14

ECE type approval no.:

Drawbar installation: E1 55R-01 2490

Changeover relay lever:

☒ Yes ☐ No



SAP: AE ZKF 270VB BASIC M DEICHSPR

Overrun device cpl. with drawbar section mounted (without hitch components)

Drawbar length E in mm	Total length K at 0° DIN drawbar eye	AE cpl. with drawbar section for wheel brake 1637 / 2051	AE cpl. with drawbar section for wheel brake 2361	AE cpl. with drawbar section for wheel brake 3081 / 3062				
1,310	2,418	200 598 01	200 598 23	200 598 45	70.9	–	3	20
1,390	2,498	200 598 02	200 598 24	200 598 46	72.5	–	3	20
1,470	2,578	200 598 03	200 598 25	200 598 47	74.0	–	3	20
1,550	2,658	200 598 04	200 598 26	200 598 48	75.5	–	3	20
1,630	2,738	200 598 05	200 598 27	200 598 49	77.1	–	3	20
1,710	2,818	200 598 06	200 598 28	200 598 50	78.6	–	3	20
1,790	2,898	200 598 07	200 598 29	200 598 51	80.1	–	3	20
1,870	2,978	200 598 08	200 598 30	200 598 52	81.7	–	3	20
1,950	3,058	200 598 09	200 598 31	200 598 53	83.2	–	3	20
2,030	3,138	200 598 10	200 598 32	200 598 54	84.7	–	3	20
2,110	3,218	200 598 11	200 598 33	200 598 55	86.2	–	3	20
2,190	3,298	200 598 12	200 598 34	200 598 56	87.8	–	3	20
2,270	3,378	200 598 13	200 598 35	200 598 57	89.3	–	3	20
2,350	3,458	200 598 14	200 598 36	200 598 58	90.8	–	3	20
2,430	3,538	200 598 15	200 598 37	200 598 59	92.4	–	3	20
2,510	3,618	200 598 16	200 598 38	200 598 60	93.9	–	3	20
2,590	3,698	200 598 17	200 598 39	200 598 61	95.4	–	3	20
2,670	3,778	200 598 18	200 598 40	200 598 62	97.0	–	3	20
2,750	3,858	200 598 19	200 598 41	200 598 63	98.5	–	3	20
2,830	3,938	200 598 20	200 598 42	200 598 64	100.0	–	3	20
2,910	4,018	200 598 21	200 598 43	200 598 65	101.5	–	3	20
2,990	4,098	200 598 22	200 598 44	200 598 66	103.1	–	3	20

Push-on hitch components: Drawbar eyes nose load 120 kg, connection D50 / 270 VB

4.2 kg



SAP: AKS3004 VERP GA 3000 FL

Hitch AKS™ 3004 — **Part no.** 1 225 158

1.8 kg



SAP: KUPLNG KUGL AK161 D50 M MONTTEILE

Ball hitch AK 270 - Ø 50 — **Part no.** 1 730 812

3.5 kg

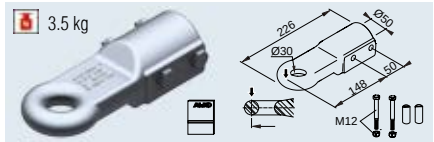

SAP: ZUGÖSE E30 M SCHRAUBMAT VZ

Drawbar eye UK E30/A — **Part no.** 1 224 106

3.8 kg

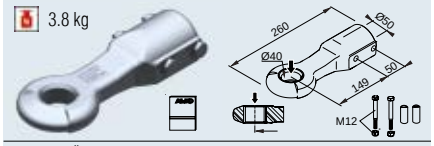

SAP: ZUGÖSE D40 M SCHRAUBMAT VZ

Drawbar eye DIN D40/F — **Part no.** 1 213 350

3.7 kg

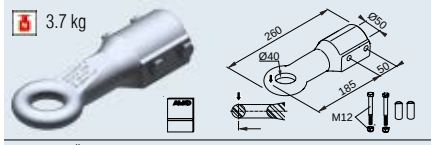

SAP: ZUGÖSE E40 M SCHRAUBMAT VZ

Drawbar eye UK E40/A — **Part no.** 1 224 107

3.8 kg

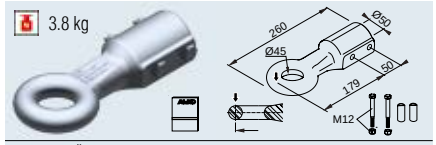

SAP: ZUGÖSE I45 M SCHRAUBMAT VZ

Drawbar eye Italy I45/F — **Part no.** 1 224 108

6.7 kg

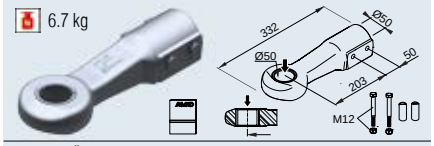

SAP: ZUGÖSE D50 M SCHRAUBMAT VZ

Drawbar eye DIN D50 — **Part no.** 1 730 612

4.3 kg

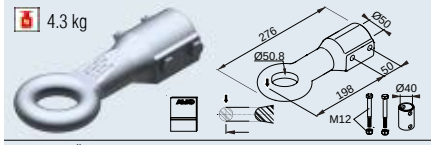

SAP: ZUGÖSE E50 M SCHRAUBMAT VZ

Drawbar eye UK E50/A — **Part no.** 1 224 109

6.6 kg

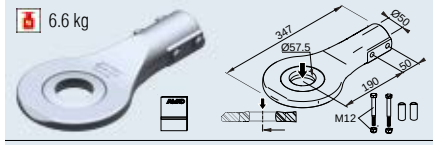

SAP: ZUGÖSE SCHWEDEN M SCHRAUBMAT AUSF A

Drawbar eye Sweden VBG 57.5 — **Part no.** 1 225 076

5.6 kg

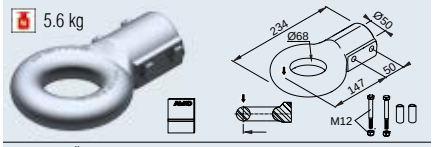

SAP: ZUGÖSE F68 M SCHRAUBMAT VZ

Drawbar eye France F68/E — **Part no.** 1 224 110

6.0 kg

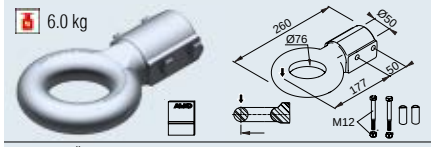

SAP: ZUGÖSE N76 M SCHRAUBMAT VZ

Drawbar eye NATO N76/E — **Part no.** 1 224 111

Overrun device cpl. with drawbar section mounted (without hitch components)

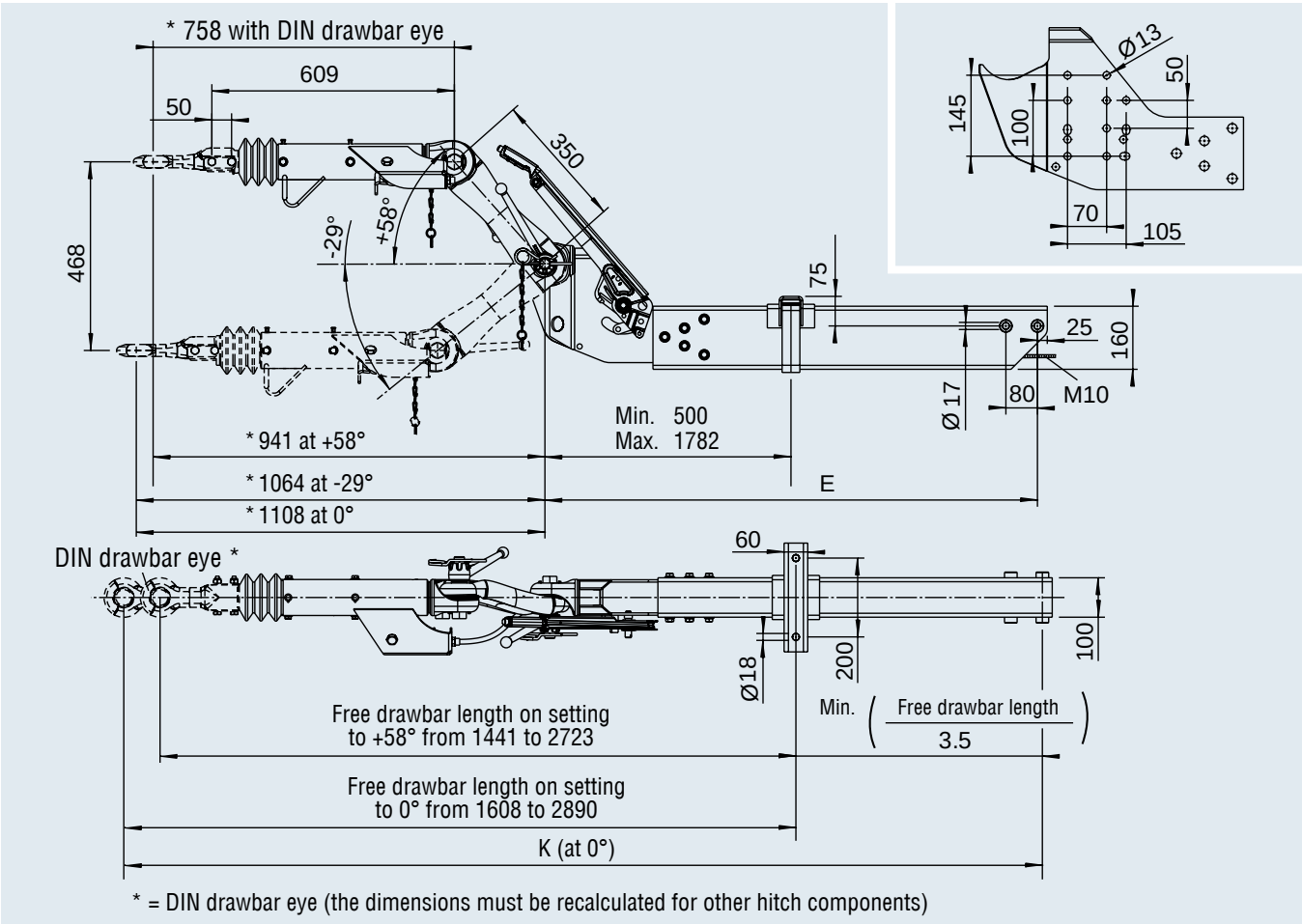

* = DIN drawbar eye (the dimensions must be recalculated for other hitch components)

HEIGHT-ADJUSTABLE OVERRUN DEVICES

350 VB BASIC with drawbar section 2,500 to 3,500 kg

TECHNOLOGY

Type overrun device 350 VB BASIC, 3,500 kg

Intermediate piece with drawbar section 350 VB BASIC, 3,500 kg

Permissible nose load with DIN drawbar eye 150 kg

with coupling head 150 kg

ECE test report no.:

Overrun device: 361-017-14

ECE type approval no.:

Drawbar installation: E1 55R-01 2454

Changeover relay lever:

☐ Yes ☒ No



SAP: AE ZKF 350VB BASIC M DEICHSPR

Overrun device cpl. with drawbar section mounted (without hitch components)

Drawbar length E in mm	Total length K at 0° DIN drawbar eye	AE cpl. with drawbar section for wheel brake 2051	AE cpl. with drawbar section for wheel brake 2361	AE cpl. with drawbar section for wheel brake 3081 / 3062				
1,310	2,610	200 599 44	1 272 702	200 599 22	109	–	3	20
1,390	2,690	200 599 45	200 599 01	200 599 23	112	–	3	20
1,470	2,770	200 599 46	200 599 02	200 599 24	114	–	3	20
1,550	2,850	200 599 47	200 599 03	200 599 25	116	–	3	20
1,630	2,930	200 599 48	200 599 04	200 599 26	118	–	3	20
1,710	3,010	200 599 49	200 599 05	200 599 27	120	–	3	20
1,790	3,090	200 599 50	200 599 06	200 599 28	123	–	3	20
1,870	3,170	200 599 51	200 599 07	200 599 29	125	–	3	20
1,950	3,250	200 599 52	200 599 08	200 599 30	127	–	3	20
2,030	3,330	200 599 53	200 599 09	200 599 31	129	–	3	20
2,110	3,410	200 599 54	200 599 10	200 599 32	131	–	3	20
2,190	3,490	200 599 55	200 599 11	200 599 33	134	–	3	20
2,270	3,570	200 599 56	200 599 12	200 599 34	136	–	3	20
2,350	3,650	200 599 57	200 599 13	200 599 35	138	–	3	20
2,430	3,730	200 599 58	200 599 14	200 599 36	140	–	3	20
2,510	3,810	200 599 59	200 599 15	200 599 37	142	–	3	20
2,590	3,890	200 599 60	200 599 16	200 599 38	145	–	3	20
2,670	3,970	200 599 61	200 599 17	200 599 39	147	–	3	20
2,750	4,050	200 599 62	200 599 18	200 599 40	149	–	3	20
2,830	4,130	200 599 63	200 599 19	200 599 41	151	–	3	20
2910	4210	200 599 64	200 599 20	200 599 42	153	–	3	20
2990	4290	200 599 65	200 599 21	200 599 43	156	–	3	20

Push-on hitch components: Drawbar eyes nose load 350 kg, connection D60 / 350 VB

5.2 kg

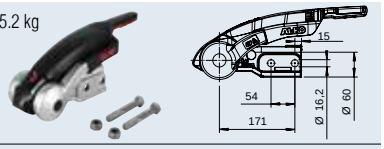

SAP: AKS3504 VERP GA3500 M SCHLIESSZYL

Hitch AKS™ 3504 — **Part no.** 1 225 761

2.9 kg

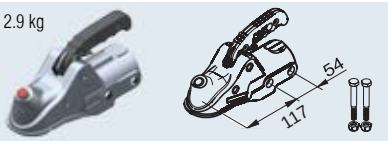

SAP: KUPLNG KUGL AK351 M MONTTEILE

Ball hitch AK 351 - Ø 60 — **Part no.** 1 224 391

3.9 kg

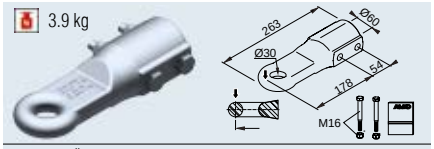

SAP: ZUGÖSE E30 M SCHRAUBMAT VZ

Drawbar eye UK E30/B — **Part no.** 1 224 112

4.2 kg

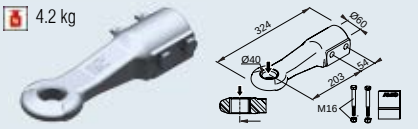

SAP: ZUGÖSE D40 M SCHRAUBMAT VZ

Drawbar eye DIN D40/G — **Part no.** 1 224 114

4.1 kg

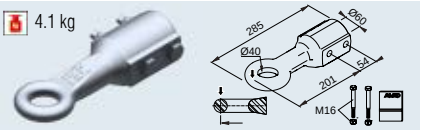

SAP: ZUGÖSE E40 M SCHRAUBMAT VZ

Drawbar eye UK E40/B — **Part no.** 1 224 113

4.2 kg

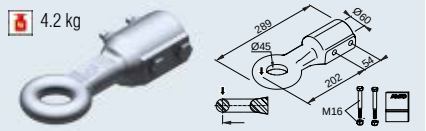

SAP: ZUGÖSE I45 M SCHRAUBMAT VZ

Drawbar eye Italy I45/G — **Part no.** 1 224 115

7.2 kg

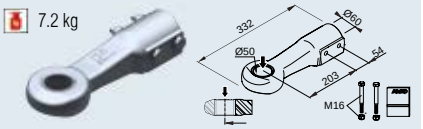

SAP: ZUGÖSE D50 M SCHRAUBMAT VZ

Drawbar eye DIN D50 — **Part no.** 1 730 613

4.7 kg

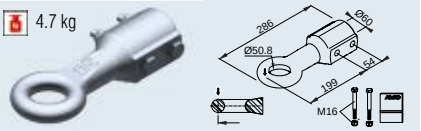

SAP: ZUGÖSE E50 M SCHRAUBMAT VZ

Drawbar eye UK E50/B — **Part no.** 1 224 116

7.7 kg

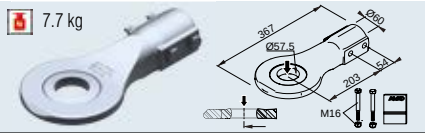

SAP: ZUGÖSE SCHWEDEN M SCHRAUBMAT AUSF B

Drawbar eye Sweden VBG 57.5 — **Part no.** 1 225 077

6.0 kg

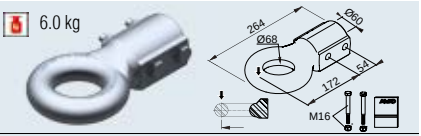

SAP: ZUGÖSE F68 M SCHRAUBMAT VZ

Drawbar eye France F68/F — **Part no.** 1 224 117

6.4 kg

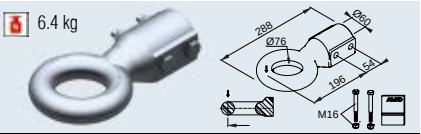

SAP: ZUGÖSE N76 M SCHRAUBMAT VZ

Drawbar eye NATO N76/F — **Part no.** 1 224 118

Overrun device cpl. with drawbar section mounted (without hitch components)

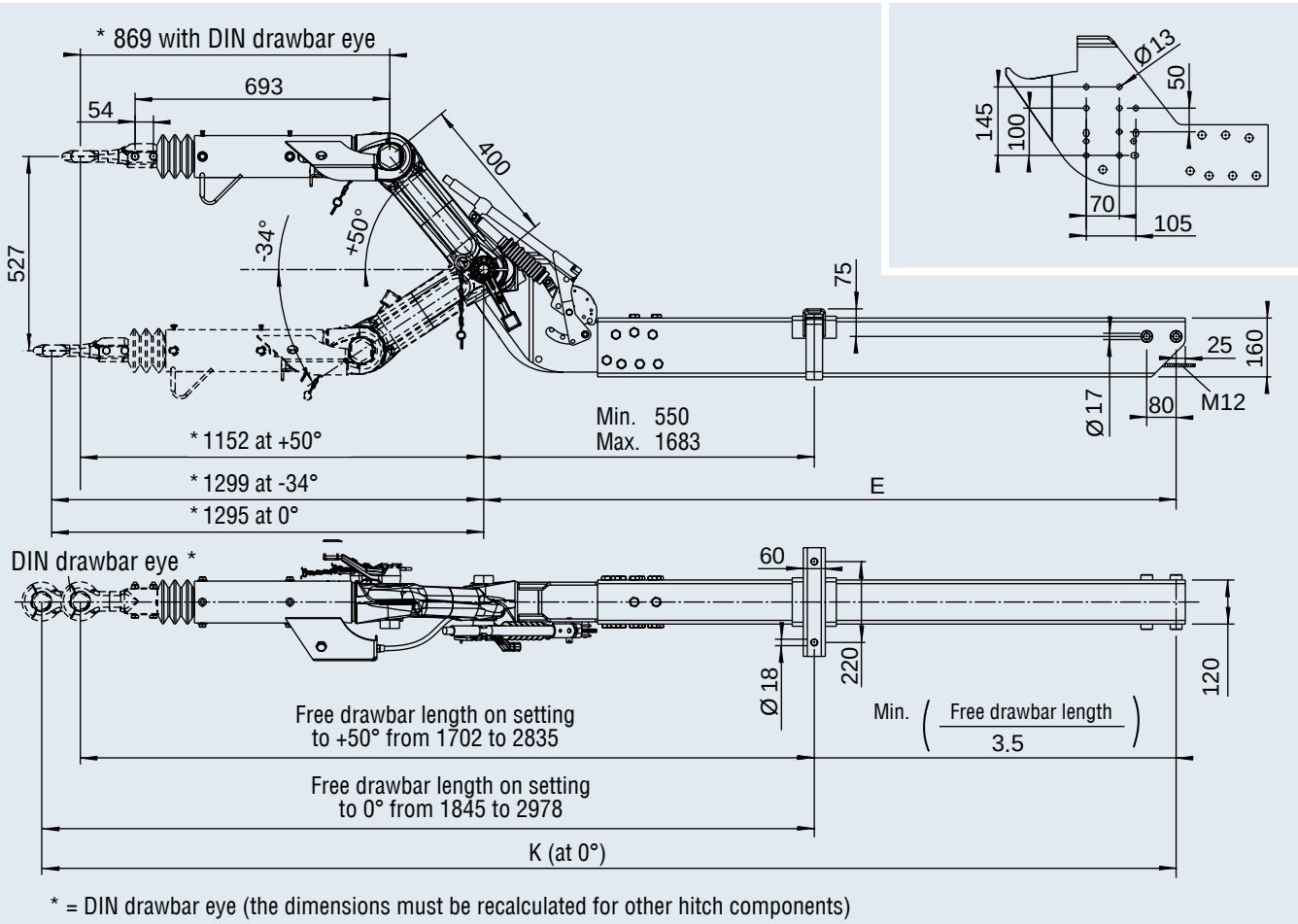

* = DIN drawbar eye (the dimensions must be recalculated for other hitch components)

HEIGHT-ADJUSTABLE OVERRUN DEVICE COMPACT

510 to 1,000 kg

YOUR ADVANTAGE

Time is money
Commercial operators in particular appreciate trailer concepts that permit all kinds of towing vehicles (cars, trucks) to be changed flexibly and quickly.
The height-adjustable overrun devices represent a successful product line from AL-KO which has conquered the European market.

- Fully mounted unit (without hitch components)
- Hot-dip galvanised
- Delivery time 10 working days (see following product page)
- Accessories can be retrofitted
- Changeover relay lever for certain types (see following product page)

TECHNOLOGY

- The hitch components must be replaced by a specialist workshop.
- The maximum free drawbar lengths are shown in the following table.
  All clamping mounts can be clamped.
  If the clamping mounts are welded, the max. free drawbar length will be reduced.

SURFACE TREATMENT

- Hot-dip galvanised
- Coupling heads, eyes and various small parts galvanised

SCOPE OF SUPPLY

Please order:

- **Loose hitch components (see following product page)**
  Scope of delivery:
  Hitch component with fastening screws

- **Overrun device cpl. mounted without hitch components**
  Scope of delivery:
  – Overrun device
  – Intermediate piece
  – Transmission device (cable)
  – Handbrake lever (gas-strut-assisted)
  – Breakaway cable
  – Drawbar section
  – Transmission device (brake rod)
  – Jockey wheel flange with integrated plug holder
  – Clamping mount for clamping
  – Spacer tubes
  – Operating instructions

Additional toothed lock washers in the highly loaded joints – doubling the teeth – a significant advantage compared to conventional tooth heads. This positive-locking connection gives our overrun devices their stability and long service life.

Large ground clearance with low suspension due to the cranked drawbar section and the low structural height of the overrun device.

The forces are transmitted directly via cable and brake rod. This means we achieve low-friction force transmission compared to conventional Bowden cable transmission. Consequently, brake force is increased and the braking distance shortened.









Maximum free drawbar lengths a) 0° = extended condition b) +50°) = max. elevated condition	102 VB mm
0° Clamping mount clamped	3,198
0° Clamping mount welded	2,208
50° Clamping mount clamped	2,930
50° Clamping mount welded	1,940

A light special box section even permits free drawbar lengths up to 2,300 mm. The special box section provides maximum stability with the lowest possible inherent weight.



IMPORTANT!

Combine AL-KO overrun devices with AL-KO wheel brakes
AL-KO overrun devices comply with the latest ECE Directives. They may only be combined with the corresponding AL-KO wheel brakes. Please note that the brake system will not function with other combinations.

Excessive nose loads
lead to an increase in plain bearing friction forces. This results in a decrease in braking effect. Consequently, please comply with the prescribed nose loads.

Type plates
Type plates must not be rendered illegible by painting or covered by attachments.

Reinforced overrun devices
Overrun devices, drawbars and hitch components of a reinforced version must be installed on trucks, buses or towing vehicles with hard suspension.
Please contact us.

OVERRUN DEVICE HEIGHT-ADJUSTABLE

101 VB COMPACT with drawbar section straight 510 to 1,000 kg

TECHNOLOGY

Type overrun device 101 VB COMPACT

Intermediate piece with drawbar section 102 VB Compact
Optional: Intermediate piece 400 mm / 600 mm
Permitted nose load 100 kg

ECE test report no.:

Overrun device: 361-0127-97

ECE type approval no.:

Drawbar installation: E1 55R-01 0211

Changeover relay lever:
☐ Yes ☒ No



SAP: AE ZSHB 101 VB M DEICHSPR

Overrun device cpl. with drawbar section mounted (without hitch components)

Drawbar length E in mm	Total length K at 0° DIN drawbar eye	AE cpl. with drawbar section For wheel brake 1637/2051				
1,010	2,150	200 566 01	44.0	–	9	10
1,090	2,230	200 566 02	44.7	–	9	10
1,170	2,310	200 566 03	45.4	–	9	10
1,250	2,390	200 566 04	46.1	–	9	10
1,330	2,470	200 566 05	46.8	–	9	10
1,410	2,550	200 566 06	47.5	–	9	10
1,490	2,630	200 566 07	48.2	–	9	10
1,570	2,710	200 566 08	48.9	–	9	10
1,650	2,790	200 566 09	49.6	–	9	10
1,730	2,870	200 566 10	50.3	–	9	10
1,810	2,950	200 566 11	51.0	–	9	10
1,890	3,030	200 566 12	51.7	–	9	10
1,970	3,110	200 566 13	52.4	–	9	10
2,050	3,190	200 566 14	53.1	–	9	10
2,130	3,270	200 566 15	53.8	–	9	10
2,210	3,350	200 566 16	54.5	–	9	10
2,290	3,430	200 566 17	55.2	–	9	10
2,370	3,510	200 566 18	55.9	–	9	10
2,450	3,590	200 566 19	56.6	–	9	10
2,530	3,670	200 566 20	57.3	–	9	10
2,610	3,750	200 566 21	58.0	–	9	10
2,690	3,830	200 566 22	58.7	–	9	10
2,770	3,910	200 566 23	59.4	–	9	10
2,850	3,990	200 566 24	60.1	–	9	10

Push-on hitch components: Drawbar eyes nose load 100 kg, connection D40 / 101 VB

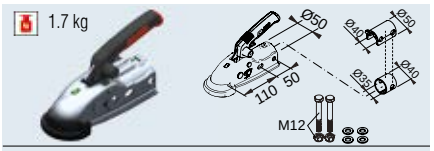

SAP: KUPLNG KUGL AK161 D35/40 M SCHRAUBMAT

Ball hitch AK161 Ø35–Ø50 **Part no.** 1 730 806

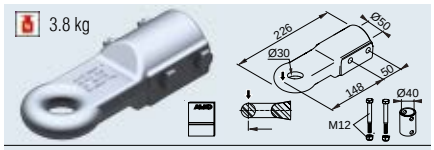

SAP: ZUGÖSE E30 M SCHRAUBMAT VZ

Drawbar eye UK E30/A **Part no.** 1 224 661

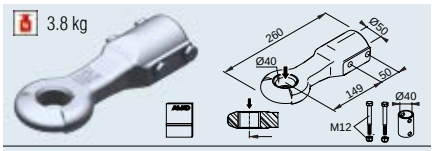

SAP: ZUGÖSE D40 M SCHRAUBMAT VZ

Drawbar eye DIN D40/F **Part no.** 1 224 660

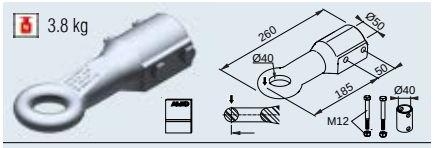

SAP: ZUGÖSE E40 M SCHRAUBMAT VZ

Drawbar eye UK E40/A **Part no.** 1 224 662

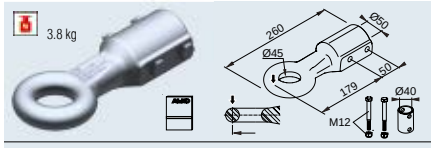

SAP: ZUGÖSE I45 M SCHRAUBMAT VZ

Drawbar eye Italy I45/F **Part no.** 1 224 663

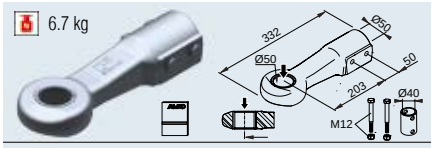

SAP: ZUGÖSE D50 M SCHRAUBMAT VZ

Drawbar eye DIN D50 / D40 **Part no.** 1 730 611

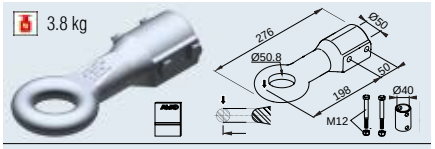

SAP: ZUGÖSE E50 M SCHRAUBMAT VZ

Drawbar eye UK E50/A **Part no.** 1 224 664

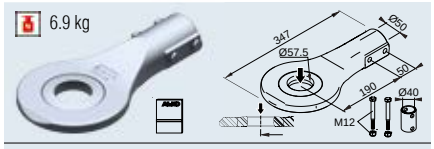

SAP: ZUGÖSE SCHWEDEN M SCHRAUBMAT AUSF A

Drawbar eye Sweden VBG 57.5 **Part no.** 1 225 125

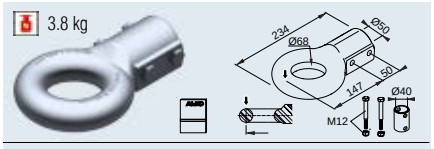

SAP: ZUGÖSE F68 M SCHRAUBMAT VZ

Drawbar eye France F68/E1 **Part no.** 1 224 665

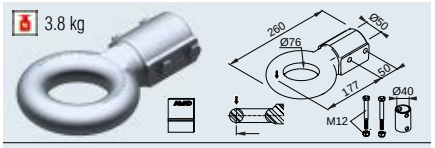

SAP: ZUGÖSE N76 M SCHRAUBMAT VZ

Drawbar eye NATO N76/E **Part no.** 1 224 666

Overrun device cpl. with drawbar section mounted (without hitch components)

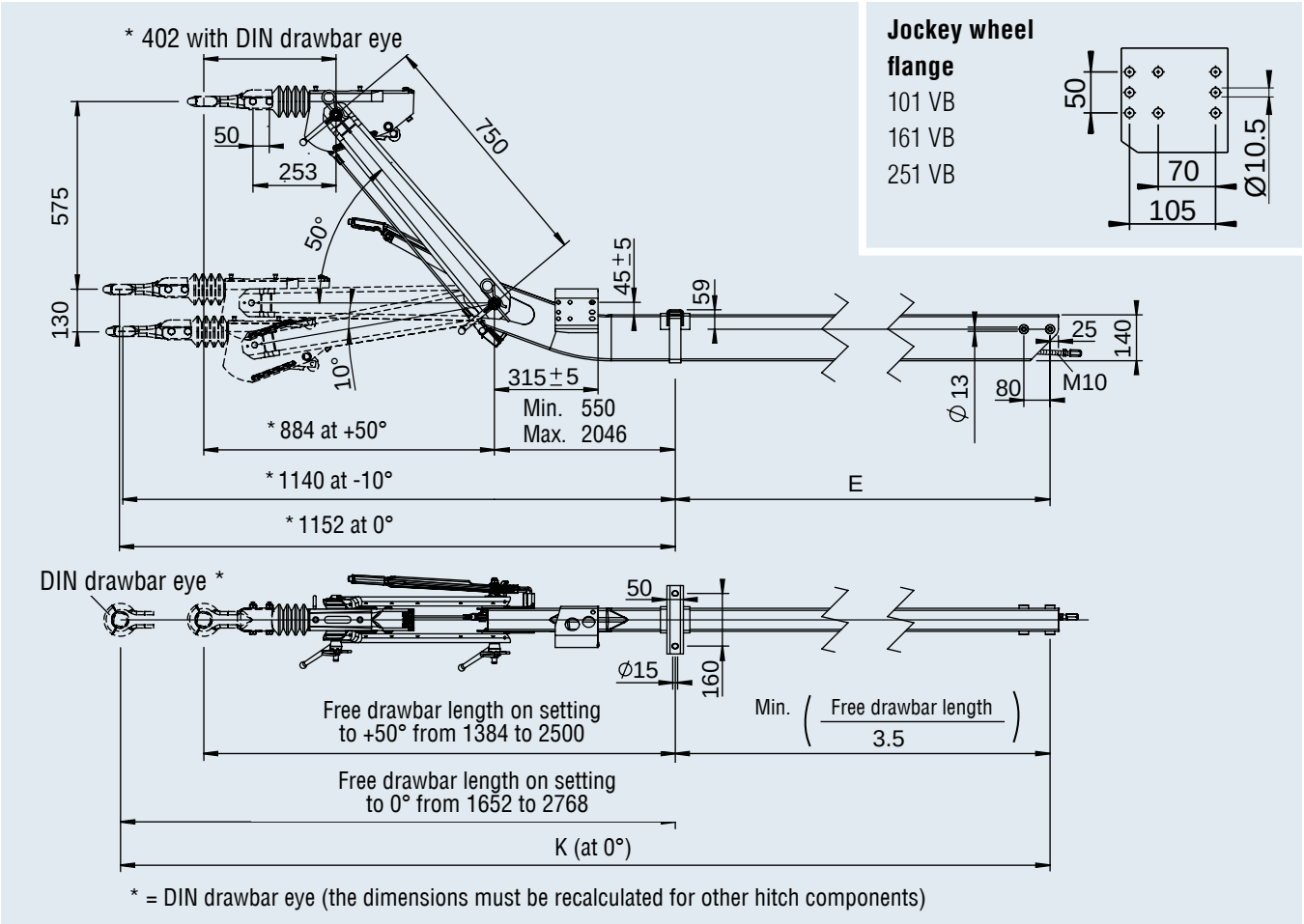

Jockey wheel flange
101 VB
161 VB
251 VB

4. AXLES

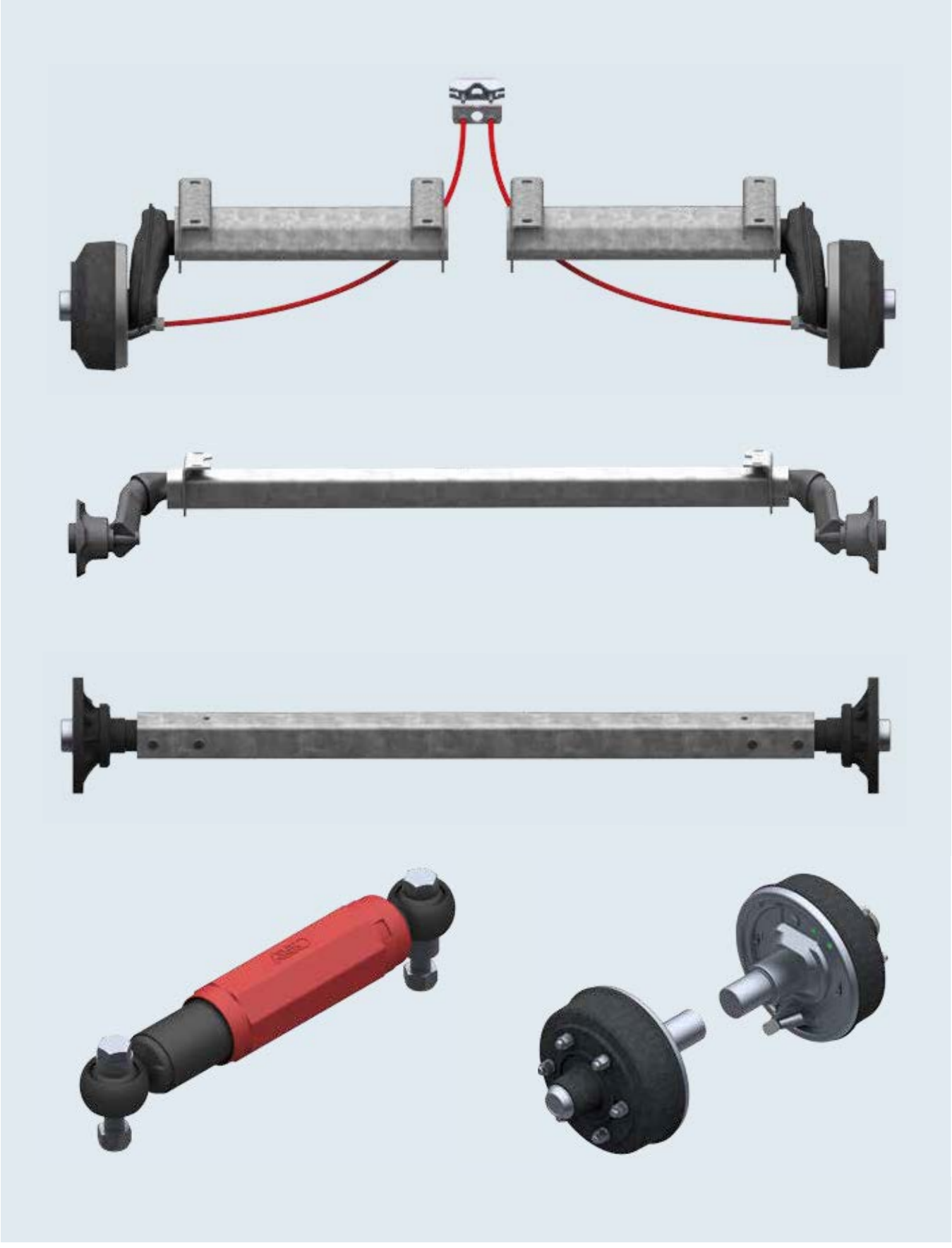

AXLES

Axles in general

Suspension, details 148 – 151

Unbraked axles 152 – 153

BASIC product line, variants 154 – 172

PLUS product line, variants 174 – 185

Hub and stub axle sets 186 – 189

Braked axles 190 – 191

BASIC product line, variants 192 – 213

PLUS product line, variants 214 – 231

PREMIUM/PROFI product line, variants 232 – 235

Special axles 236 – 273

Wheel brakes 274 – 278

Accessories for axles 280 – 305

AL-KO AXLES

The hexagonal rubber suspension with independent wheel suspension

GENTLE AND SAFE TRANSPORT WITH THE UNIQUE AL-KO HAXAGONAL RUBBER SUSPENSION

YOUR ADVANTAGE

Certain types of trailer are intended for the gentle transport of sensitive goods. These include e.g.

- **Livestock trailers:**
Horses, cattle, pigs and dogs should be transported stress-free and gently to avoid injuries.

- **Goods trailers:**
Boats, cars, motorcycles, quad bikes, lawn tractors, electronics, mobile working machines, caravans, bottles, furniture, dangerous goods. These valuable goods have to arrive unscathed at their destination. Soft and comfortable suspension should also preserve service life and structure of these usually expensive goods for as long as possible.



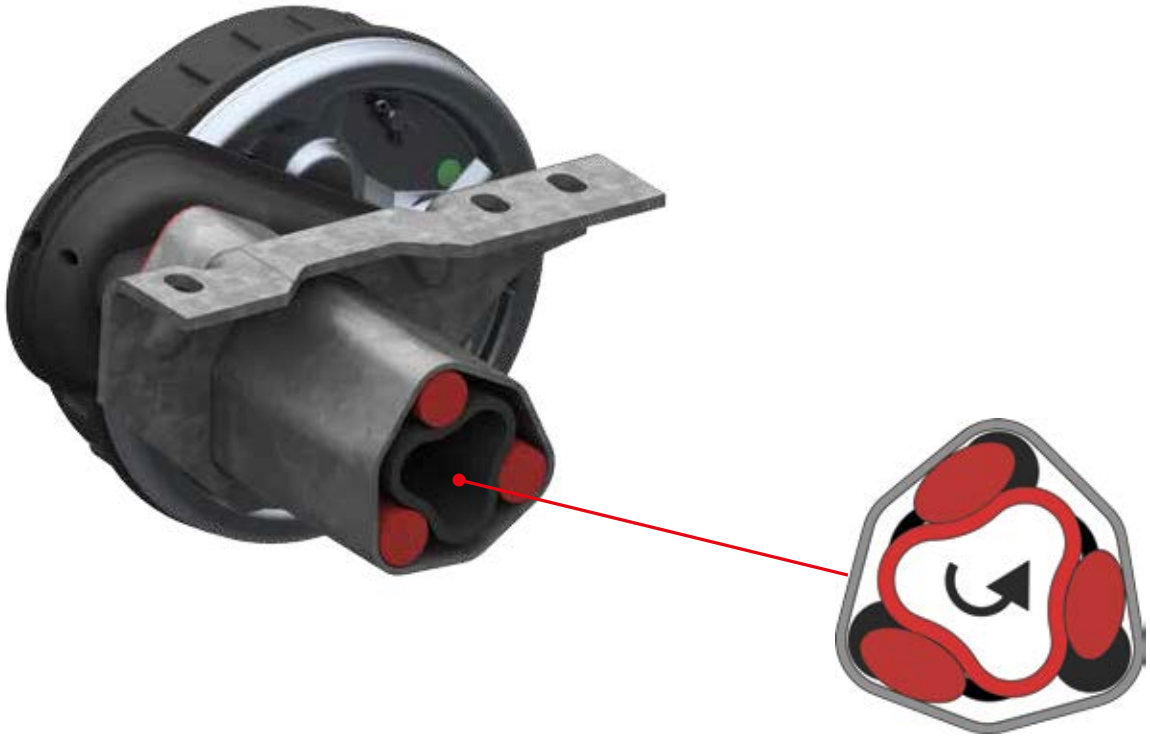

WHAT DOES AL-KO'S CHARACTERISTIC SPECIAL AXLE PROFILE OFFER?

INCREASED DRIVING COMFORT DUE TO LONG SUSPENSION TRAVEL

The AL-KO hexagonal outer tube in conjunction with the triangular inner tube achieves the greatest suspension travels compared to any other rubber suspension axle. Our suspension procedure does not squash the rubber; instead, we give it room to work. The rubber sub-assembly that is important to the suspension is therefore protected as well.

INCREASED RIDE COMFORT DUE TO SOFTER SUSPENSION

The special AL-KO hexagonal rubber suspension system also enables us to design the suspension far softer than other rubber suspension systems that are on the market. The yardstick here is set by the spring softness of the automotive industry which we get closer to than any other rubber suspension systems (source: test by Ravensburg University).

INCREASED DRIVING STABILITY DUE TO HIGH INHERENT DAMPING

One crucial criterion regarding the suspension of an axle is its inherent damping, i.e. the suspension must settle as quickly as possible. Here too, we achieve the best inherent damping amongst all rubber suspension axles.

EACH WHEEL HAS INDEPENDENT WHEEL SUSPENSION

Consequently, unevenness in the road surface only acts on the side where it occurs.

THE SUSPENSION IS MAINTENANCE-FREE

This eliminates service and maintenance costs for the user.

NO DAMAGE TO THE WHEEL ARCH

Nor is damage to other components possible due to overtightening the swing arm – even when severely overloaded.

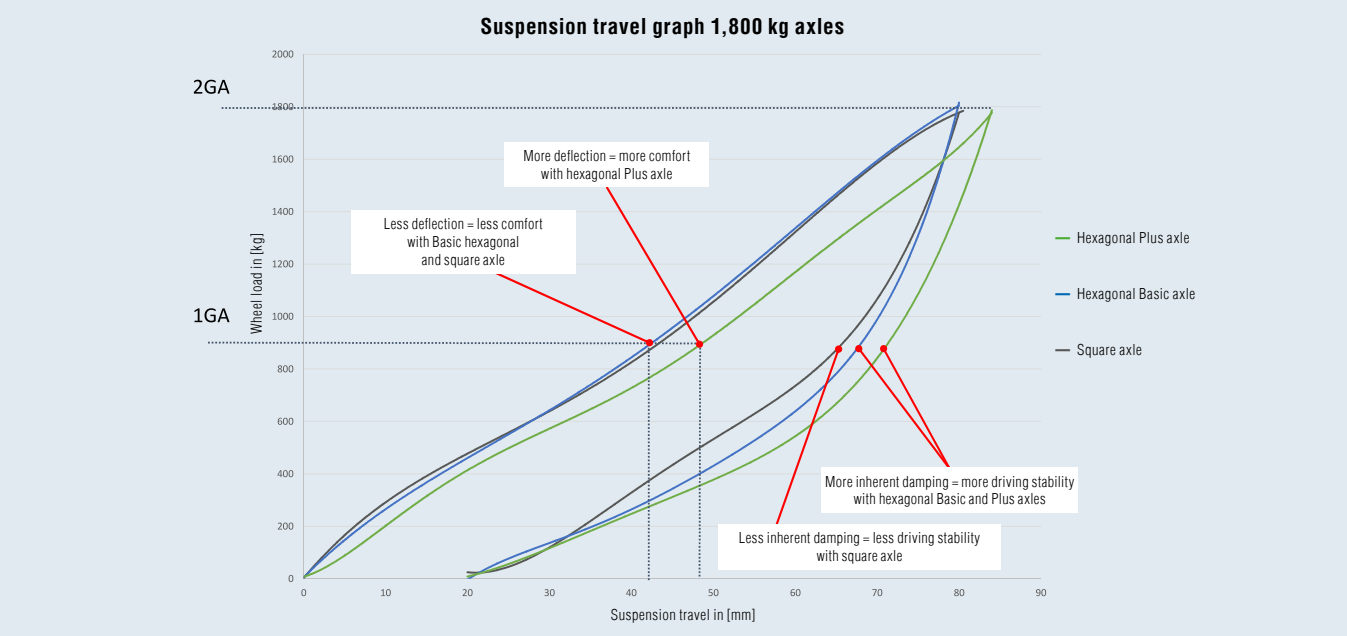

AL-KO AXLES

Essential details



Better heat dissipation through brake drums with cooling ribs



Deep-drawn and embossed brake backing plate

- Extremely stable steel plate. Example: The wall thickness on an axle with a perm. total weight of 1,300 kg is 3.5 mm.



Optimum corrosion protection

- Axle profile hot-dip galvanised. Brake back plate and various small parts galvanised.
- Highly corrosion resistant brake pads free of asbestos (without iron content).



Double radial angled ball bearing (compact bearing)

- Dimensioned for a bearing life of up to 250,000 km.
- Maintenance-free.
- Lifetime lubrication with special grease containing water-repellent additives.
- Protected against dirt and water.
- A dust plate on the outside (double seal) prevents dirt ingress.
- Easy to install due to standardised tightening torque.
- A watertight compact bearing is available specifically for boat trailers.



Plug-in shock absorber brackets

- On axles with hollow swing arm. This equates to trouble-free retrofitting without welding.



Axle stub and wheel brake bolted

- After the screw connection has been unfastened, the complete wheel brake can be removed.
- The special tooth profile also enables us to vary the Bowden cable exit position as desired by the customer.



Weldable shock absorber brackets

- Welded shock absorber brackets for axles with forged swing arms.



Axle stub and wheel brake welded

- Low-cost and proven AL-KO quality.

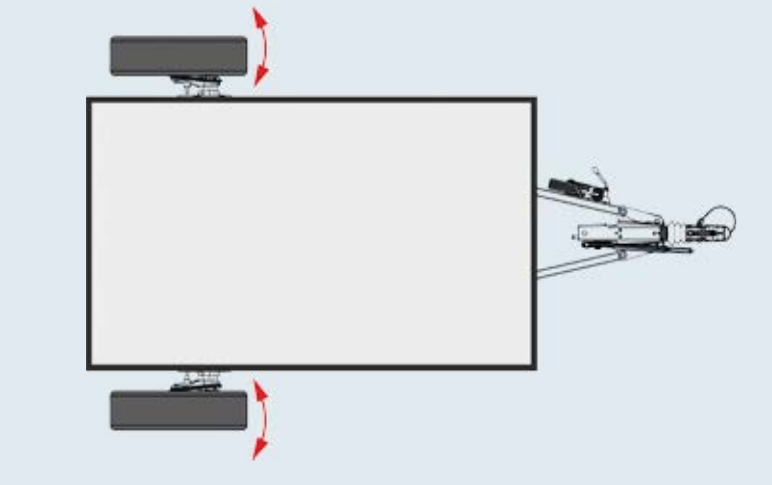

Minimum tyre wear

On AL-KO axles with bolt-on wheel brake, the toe-in is pre-set in the factory as in automotive engineering. We are no longer satisfied with high welding tolerances. In this way, we significantly reduce tolerances in the toe-in such as occur due to distortion if the components are welded.

OPTIMUM CORROSION PROTECTION

Process	**Parts**	**Coat thickness** (guidance values)	**Reduction in coat thickness per year**	**Theoretical corrosion protection in years** (guidance values)
Hot-dip galvanising	Axle profile, frame, tubes, housings of overrun devices	70 µm	2-5 µm	> 10 years, coat damage up to 2 mm – self-healing process
Sendzimir-galvanising	Steel plate components that require high accuracy and can be processed off the coil	25 µm	2-5 µm	> 5 years, cut edge self-healing process up to 2 mm
Galvanisation	Parts that require high accuracy, e.g. small parts of the wheel brake and overrun device	12 µm	2-5 µm	> 4 years (but without continuous corrosion protection)
Synthetic resin dip-coating	Axle links, inside tubes, brake drums	–	–	Can withstand outdoor storage for approx. 6 months
Special post-treatment process (thin, anti-slip film anchored in all pores; water repellent with long-term effect)	Brake drums (special thread profile and brake surface)	–	–	Can withstand outdoor storage for approx. 6 – 12 months

AL-KO UNBRAKED AXLES

Product differentiation

Axles are required for diverse trailer types and application areas. Each application area has individual requirements in terms of benefit and price.

With our clear axle product differentiation, we offer the optimal solution for each purpose: This also enables you to clearly differentiate your products with optimal value creation.

A maximum of 6 points are possible in the evaluation

Benefit	
Suspension travel = ride comfort	
Spring softness = ride comfort	
Inherent damping = driving stability	
Quality	

BASIC UNBRAKED AXLES – VARIANTS / DETAILS

BASIC unbraked axles "details"	**500 kg**	**750 kg**
Gross weight kg, single axle	500	750
Gross weight kg, tandem axle	–	–
Suitable for	Privately used trailers	Trailers of all types
Type of suspension	Square rubber suspension	Hexagonal rubber suspension
Swing arm design	Hollow	Hollow
Swing arm length (mm)	135	145
Suspension comfort set-up	Average	Average
Axle profile, diameter	Square, 55 mm	Hexagonal, 71 mm
Suspension maintenance	Maintenance-free	Maintenance-free
Wheel bearing design	Deep groove ball bearing	Compact bearing
Bearing maintenance required?	Yes	No, maintenance-free
Independent wheel suspension	Yes	Yes
Wheel arch damage possible with extreme overload?	Yes	No
Axle stub connection to swing arm	Welded	Welded
Possible toe-in adjustment for minimal tyre wear	No	No
Options / surcharge		
Watertight bearing available	No	Yes
Shock absorber bracket fastening	Welded	Welded







BASIC unbraked axles	PLUS unbraked axles	PREMIUM PROFI unbraked axles
● ●	● ● ● ●	No solution available at present
● ●	● ● ● ●	No solution available at present
● ●	● ● ● ●	No solution available at present
● ● ● ● ● ●	● ● ● ● ● ●	No solution available at present

4

1,000 kg	1,300 kg	1,500 kg
1,000	1,300	1,500
–	–	–
Trailers of all types	Trailers of all types	Trailers of all types
Hexagonal rubber suspension	Hexagonal rubber suspension	Hexagonal rubber suspension
Hollow	Hollow	Hollow
158	161.5	161.5
Average	Average	Average
Hexagonal, 80 mm	Hexagonal, 97 mm	Hexagonal, 97 mm
Maintenance-free	Maintenance-free	Maintenance-free
Compact bearing	Compact bearing	Compact bearing
No, maintenance-free	No, maintenance-free	No, maintenance-free
Yes	Yes	Yes
No	No	No
Bolted	Bolted	Bolted
Yes	Yes	Yes

Yes	Yes	Yes
Plug-in	Plug-in	Welded

UNBRAKED AXLE 500 KG BASIC

APPLICATION AREAS / BENEFIT / OPTIONS

The axle is developed and approved exclusively for private use.
Commercial use is not permitted.

SUSPENSION

Proven maintenance-free square rubber suspension

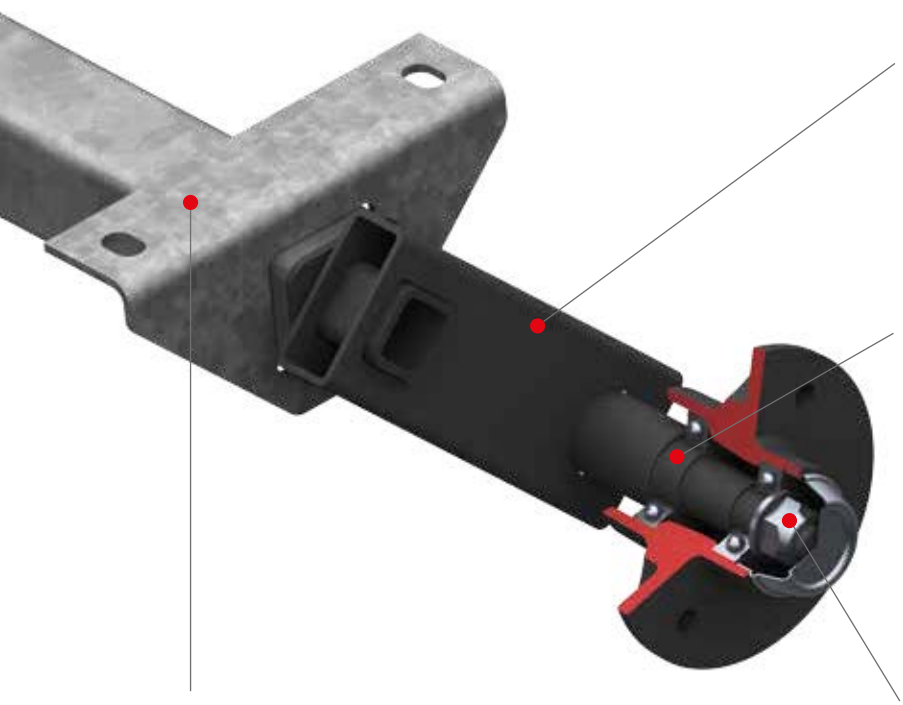

RECTANGULAR SECTION SWING ARM

BEARINGS

Two high-quality, durable deep groove ball bearings with double-sided lip seal. Greased and lubricated for life.

SURFACE TREATMENT

Hot-dip galvanised axle profile (without passivation). Primed inner tube, swing arm and hub

AXLE STUB/BEARING/HUB SCREW CONNECTION

This bearing combination is secured by a self-locking M16 nut. The nut connection must be inspected at regular intervals.

HUB VARIANTS AND POSSIBLE WHEEL CONNECTIONS

	Offset from - to mm	Possible wheel connections 100x4	98x4	101.6x4
Standard hub	Offset 0 – offset 15	x	x	x

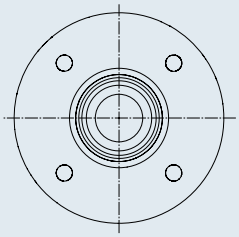

The following options can be offered for a surcharge.

1. AXLE BRACKETS

Our standard axle brackets can be found on the next pages. Special axle brackets are available for a minimum annual quantity of 500 axles.

Please let us know the details of your body design so that we can select the right version for you.



2. SWING ARM POSITION

In addition to our standard swing arm position of 45° we optionally also offer 25°.



Swing arm position of 45°



Swing arm position of 25°

UNBRAKED AXLE 500 KG BASIC

98 x 4 / 100 x 4 / 101.6 x 4

TECHNOLOGY

Model:	BASIC	Swing arm length:	135 mm
Axle type:	V500	Wheel connection:	98x4 / 100x4 / 101.6x4
Axle load:	SA 500 kg	Wheel bearing:	Deep groove ball bearing
Suspension:	Square rubber suspension	Rim centre hole:	Min. 57 mm



Minimum order quantity per date and item number is 50 units.

SAP: ACHSE GU UBR EA 500 VKT BASIC

Single axle							
Wheel bolts Taper M 12x1.5 98x4	**Wheel bolts Taper M 12x1.5 100x4**						
Axle cpl.	**Axle cpl.**	**OHF in mm**	**BC in mm**				
200 604 01	200 605 01	1,010	700	15.0	–	50	25
200 604 02	200 605 02	1,060	750	15.3	–	50	25
200 604 03	200 605 03	1,110	800	15.6	–	50	25
200 604 04	200 605 04	1,160	850	15.8	–	50	25
200 604 05	200 605 05	1,210	900	16.1	–	50	25
200 604 06	200 605 06	1,260	950	16.3	–	50	25
200 604 07	200 605 07	1,310	1,000	16.6	–	50	25
200 604 08	200 605 08	1,360	1,050	16.8	–	50	25
200 604 09	200 605 09	1,410	1,100	17.0	–	50	25
200 604 10	200 605 10	1,460	1,150	17.3	–	50	25
200 604 11	200 605 11	1,510	1,200	17.5	–	50	25
200 604 12	200 605 12	1,560	1,250	17.8	–	50	25
200 604 13	200 605 13	1,610	1,300	18.0	–	50	25
200 604 14	200 605 14	1,660	1,350	18.3	–	50	25
200 604 15	200 605 15	1,710	1,400	18.6	–	50	25
200 604 16	200 605 16	1,760	1,450	18.8	–	50	25
200 604 17	200 605 17	1,810	1,500	19.1	–	50	25
200 604 18	200 605 18	1,860	1,550	19.3	–	50	25
200 604 19	200 605 19	1,910	1,600	19.5	–	50	25
200 604 20	200 605 20	1,960	1,650	19.8	–	50	25
200 604 21	200 605 21	2,010	1,700	20.0	–	50	25
200 604 22	200 605 22	2,060	1,750	20.3	–	50	25
200 604 23	200 605 23	2,110	1,800	20.5	–	50	25
200 604 24	200 605 24	2,160	1,850	20.8	–	50	25

SCOPE OF DELIVERY

- Wheel bolts loose

SURFACE TREATMENT

- Axle profile hot-dip galvanised

Single axle

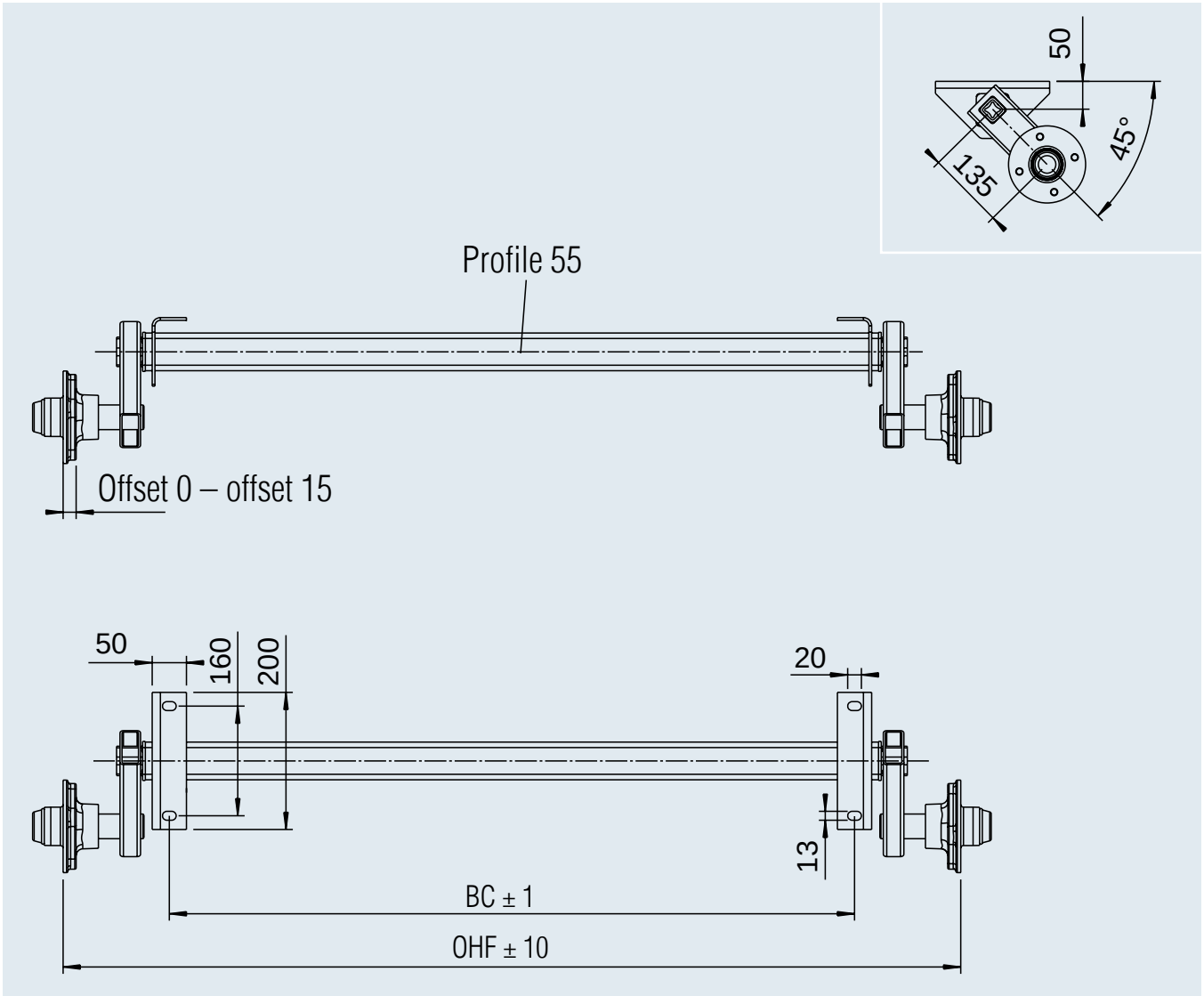

UNBRAKED AXLE 500 KG BASIC

98 x 4 / 100 x 4 / 101.6 x 4

TECHNOLOGY

Model:	BASIC	Swing arm length:	135 mm
Axle type:	V500	Wheel connection:	98x4 / 100x4 / 101.6x4
Axle load:	SA 500 kg	Wheel bearing:	Deep groove ball bearing
Suspension:	Square rubber suspension	Rim centre hole:	Min. 57 mm



Minimum order quantity per date and item number is 50 units.

SAP: ACHSE GU UBR EA 500 VKT BASIC

Single axle							
Wheel bolts Taper M 12x1.5 98x4	**Wheel bolts Taper M 12x1.5 100x4**						
Axle cpl.	**Axle cpl.**	**OHF in mm**	**BC in mm**				
200 608 01	200 609 01	1,010	700	17.2	–	50	25
200 608 02	200 609 02	1,060	750	17.5	–	50	25
200 608 03	200 609 03	1,110	800	17.7	–	50	25
200 608 04	200 609 04	1,160	850	18.0	–	50	25
200 608 05	200 609 05	1,210	900	18.2	–	50	25
200 608 06	200 609 06	1,260	950	18.5	–	50	25
200 608 07	200 609 07	1,310	1,000	18.7	–	50	25
200 608 08	200 609 08	1,360	1,050	19.0	–	50	25
200 608 09	200 609 09	1,410	1,100	19.2	–	50	25
200 608 10	200 609 10	1,460	1,150	19.5	–	50	25
200 608 11	200 609 11	1,510	1,200	19.7	–	50	25
200 608 12	200 609 12	1,560	1,250	20.0	–	50	25
200 608 13	200 609 13	1,610	1,300	20.3	–	50	25
200 608 14	200 609 14	1,660	1,350	20.5	–	50	25
200 608 15	200 609 15	1,710	1,400	20.8	–	50	25
200 608 16	200 609 16	1,760	1,450	21.0	–	50	25
200 608 17	200 609 17	1,810	1,500	21.3	–	50	25
200 608 18	200 609 18	1,860	1,550	21.5	–	50	25
200 608 19	200 609 19	1,910	1,600	21.7	–	50	25
200 608 20	200 609 20	1,960	1,650	22.0	–	50	25
200 608 21	200 609 21	2,010	1,700	22.2	–	50	25
200 608 22	200 609 22	2,060	1,750	22.5	–	50	25
200 608 23	200 609 23	2,110	1,800	22.7	–	50	25
200 608 24	200 609 24	2,160	1,850	23.0	–	50	25

SCOPE OF DELIVERY

- Wheel bolts loose

SURFACE TREATMENT

- Axle profile hot-dip galvanised

Single axle

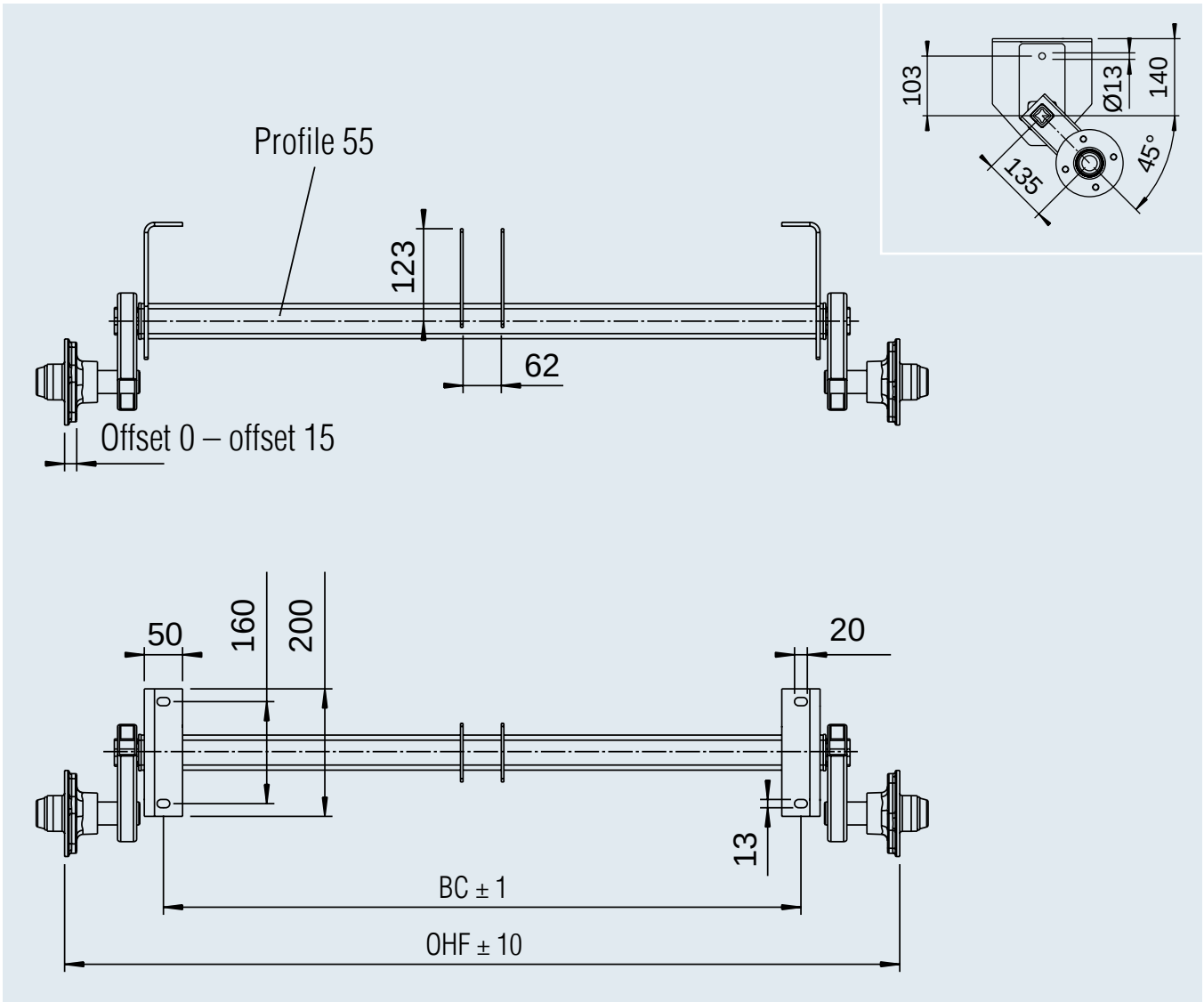

UNBRAKED AXLE 750 KG BASIC

Modern, maintenance-free axle technology "Made in Germany"

THE ADVANTAGES FOR YOU

Hollow swing arm for greater ride comfort. The lightweight swingarm is produced with maximum quality in the latest production facilities.



PERMANENTLY WATERTIGHT COMPACT BEARING FOR BOAT TRAILERS (OPTIONAL)

The seal is achieved directly **in the compact bearing** by radial shaft seals with tried-and-tested AL-KO quality.



HUB VARIANTS AND POSSIBLE WHEEL CONNECTIONS

	Offset From – to	Additional weight Per axle	Possible wheel connections 100x4	98x4	101.6x4	115x4	130x4	108x4	108x5	112x5	114.3x5	120x5	130x5
Standard hub	27 – 45 mm		X	X	X								
Universal hub	27 – 45 mm	2.8 kg				X	X	X	X	X	X	X	X

If the offset values are exceeded or undershot, the bearing service life will be reduced.

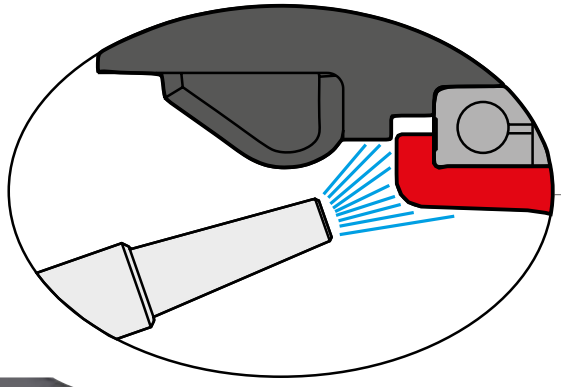

HUB WITH INTEGRATED SPLASH GUARD "LABYRINTH"

- The bearing is protected by the shape of the hub and the axle stub (labyrinth)
- This means dirt and dust cannot act directly on the bearing
- When cleaning with a high-pressure cleaner, the water jet does not act directly on the bearing



MAINTENANCE-FREE COMPACT BEARING (AS STANDARD)

- Fill-for-life lubrication
- There is no longer any need to set or readjust the bearing during servicing



DUST CAP WITH INTEGRATED SEAL

A soft plastic is used between the hub and dust cap to provide a sealing function and additional protection for the bearing.

UNBRAKED AXLE 750 KG BASIC

100 x 4, 112 x 5

TECHNOLOGY

Model:	BASIC	Swing arm length:	145 mm
Axle type:	700-5	Wheel connection:	100x4, 112x5
Axle load:	SA 750 kg	Wheel bearing:	Compact bearing
Suspension:	Hexagonal rubber suspension	Rim centre hole:	Min. 57 mm

IMPORTANT!

These axles cannot be combined with 8" complete wheels!



SAP: ACHSE GU UBR EA 750 OPTIMA

Single axle

Wheel bolts Taper M 12x1.5 100x4 Axle cpl.	Wheel bolts Ball M 12x1.5 112x5 Axle cpl.	Wheel bolts Taper M 12x1.5 100x4 Watertight axle cpl.	Wheel bolts Ball M 12x1.5 112x5 Watertight axle cpl.	OHF in mm	BC in mm	100x4	112x5			
200 596 01	200 596 48	200 600 01	200 600 25	1,130	700	17	20	–	50	10
200 596 02	200 596 49	200 600 02	200 600 26	1,180	750	17	20	–	50	10
200 596 03	200 596 50	200 600 03	200 600 27	1,230	800	18	20	–	50	10
200 596 04	200 596 51	200 600 04	200 600 28	1,280	850	18	21	–	50	10
200 596 05	200 596 52	200 600 05	200 600 29	1,330	900	18	21	–	50	10
200 596 06	200 596 53	200 600 06	200 600 30	1,380	950	18	21	–	50	10
1 422 671	200 596 54	200 600 07	200 600 31	1,430	1,000	19	21	–	50	2
200 596 07	200 596 55	200 600 08	200 600 32	1,480	1,050	19	22	–	50	10
200 596 08	200 596 56	200 600 09	200 600 33	1,530	1,100	19	22	–	50	10
200 596 09	200 596 57	200 600 10	200 600 34	1,580	1,150	19	22	–	50	10
200 596 10	200 596 58	200 600 11	200 600 35	1,630	1,200	19	22	–	50	2
200 596 11	200 596 59	200 600 12	200 600 36	1,680	1,250	20	22	–	50	10
200 596 12	200 596 60	200 600 13	200 600 37	1,730	1,300	20	23	–	50	10
200 596 13	200 596 61	200 600 14	200 600 38	1,780	1,350	20	23	–	50	10
200 596 14	200 596 62	200 600 15	200 600 39	1,830	1,400	20	23	–	50	10
200 596 15	200 596 63	200 600 16	200 600 40	1,880	1,450	20	23	–	50	10
200 596 16	200 596 64	200 600 17	200 600 41	1,930	1,500	21	23	–	50	10
200 596 17	200 596 65	200 600 18	200 600 42	1,980	1,550	21	24	–	50	10
200 596 18	200 596 66	200 600 19	200 600 43	2,030	1,600	21	24	–	50	10
200 596 19	200 596 67	200 600 20	200 600 44	2,080	1,650	21	24	–	50	10
200 596 20	200 596 68	200 600 21	200 600 45	2,130	1,700	21	24	–	50	10
200 596 21	200 596 69	200 600 22	200 600 46	2,180	1,750	22	24	–	50	10
200 596 22	200 596 70	200 600 23	200 600 47	2,230	1,800	22	25	–	50	10
200 596 23	200 596 71	200 600 24	200 600 48	2,280	1,850	22	25	–	50	10

SCOPE OF DELIVERY

- Wheel bolts loose

SURFACE TREATMENT

- Axle profile hot-dip galvanised

Clamp for drawbar tube ⌀ 60 **Part no. 267 395**

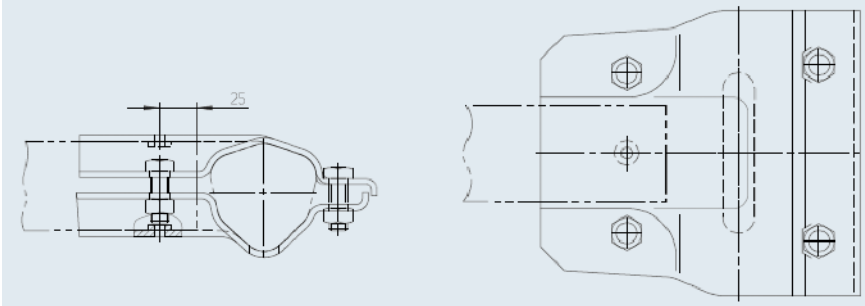

Single axle

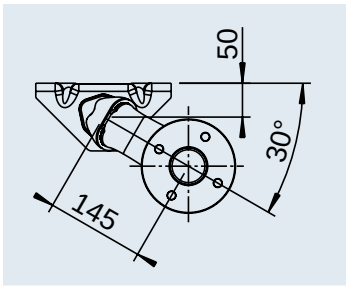

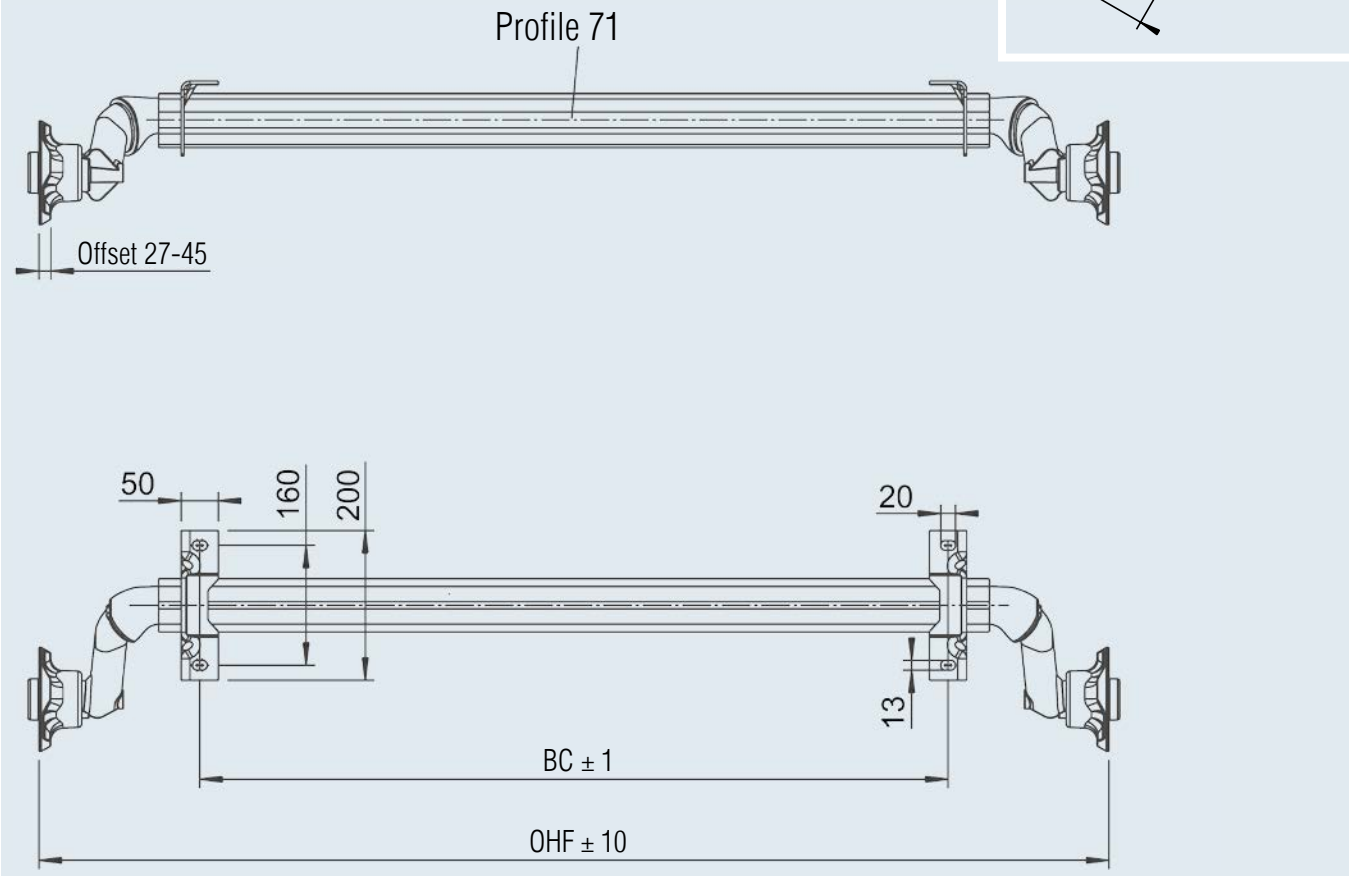

UNBRAKED AXLE 750 KG BASIC

100 x 4, 112 x 5

TECHNOLOGY

Model:	BASIC	Swing arm length:	145 mm
Axle type:	700-5	Wheel connection:	100x4, 112x5
Axle load:	SA 750 kg	Wheel bearing:	Compact bearing
Suspension:	Hexagonal rubber suspension	Rim centre hole:	Min. 57 mm

IMPORTANT!
These axles cannot be combined with 8" complete wheels!



SAP: ACHSE GU UBR EA 750 OPTIMA

Single axle Wheel bolts Taper M 12x1.5 100x4 Axle cpl.	Wheel bolts Ball M 12x1.5 112x5 Axle cpl.	Wheel bolts Taper M 12x1.5 100x4 Watertight axle cpl.	Wheel bolts Ball M 12x1.5 112x5 Watertight axle cpl.	OHF in mm	BC in mm	100x4	112x5			
200 596 24	200 596 72	200 600 49	200 600 73	1,130	700	21	24	–	50	10
200 596 25	200 596 73	200 600 50	200 600 74	1,180	750	21	24	–	50	10
200 596 26	200 596 74	200 600 51	200 600 75	1,230	800	21	24	–	50	10
200 596 27	200 596 75	200 600 52	200 600 76	1,280	850	22	24	–	50	10
200 596 28	200 596 76	200 600 53	200 600 77	1,330	900	22	25	–	50	10
200 596 29	200 596 77	200 600 54	200 600 78	1,380	950	22	25	–	50	10
200 596 30	200 596 78	200 600 55	200 600 79	1,430	1,000	22	25	–	50	2/10
200 596 31	200 596 79	200 600 56	200 600 80	1,480	1,050	22	25	–	50	10
200 596 32	200 596 80	200 600 57	200 600 81	1,530	1,100	23	25	–	50	10
200 596 33	200 596 81	200 600 58	200 600 82	1,580	1,150	23	26	–	50	10
200 596 34	200 596 82	200 600 59	200 600 83	1,630	1,200	23	26	–	50	2/10
200 596 35	200 596 83	200 600 60	200 600 84	1,680	1,250	23	26	–	50	10
200 596 36	200 596 84	200 600 61	200 600 85	1,730	1,300	23	26	–	50	10
200 596 37	200 596 85	200 600 62	200 600 86	1,780	1,350	24	26	–	50	10
200 596 38	200 596 86	200 600 63	200 600 87	1,830	1,400	24	27	–	50	10
200 596 39	200 596 87	200 600 64	200 600 88	1,880	1,450	24	27	–	50	10
200 596 40	200 596 88	200 600 65	200 600 89	1,930	1,500	24	27	–	50	10
200 596 41	200 596 89	200 600 66	200 600 90	1,980	1,550	24	27	–	50	10
200 596 42	200 596 90	200 600 67	200 600 91	2,030	1,600	25	27	–	50	10
200 596 43	200 596 91	200 600 68	200 600 92	2,080	1,650	25	28	–	50	10
200 596 44	200 596 92	200 600 69	200 600 93	2,130	1,700	25	28	–	50	10
200 596 45	200 596 93	200 600 70	200 600 94	2,180	1,750	25	28	–	50	10
200 596 46	200 596 94	200 600 71	200 600 95	2,230	1,800	26	28	–	50	10
200 596 47	200 596 95	200 600 72	200 600 96	2,280	1,850	26	29	–	50	10

SCOPE OF DELIVERY

- Wheel bolts loose

SURFACE TREATMENT

- Axle profile hot-dip galvanised

Single axle

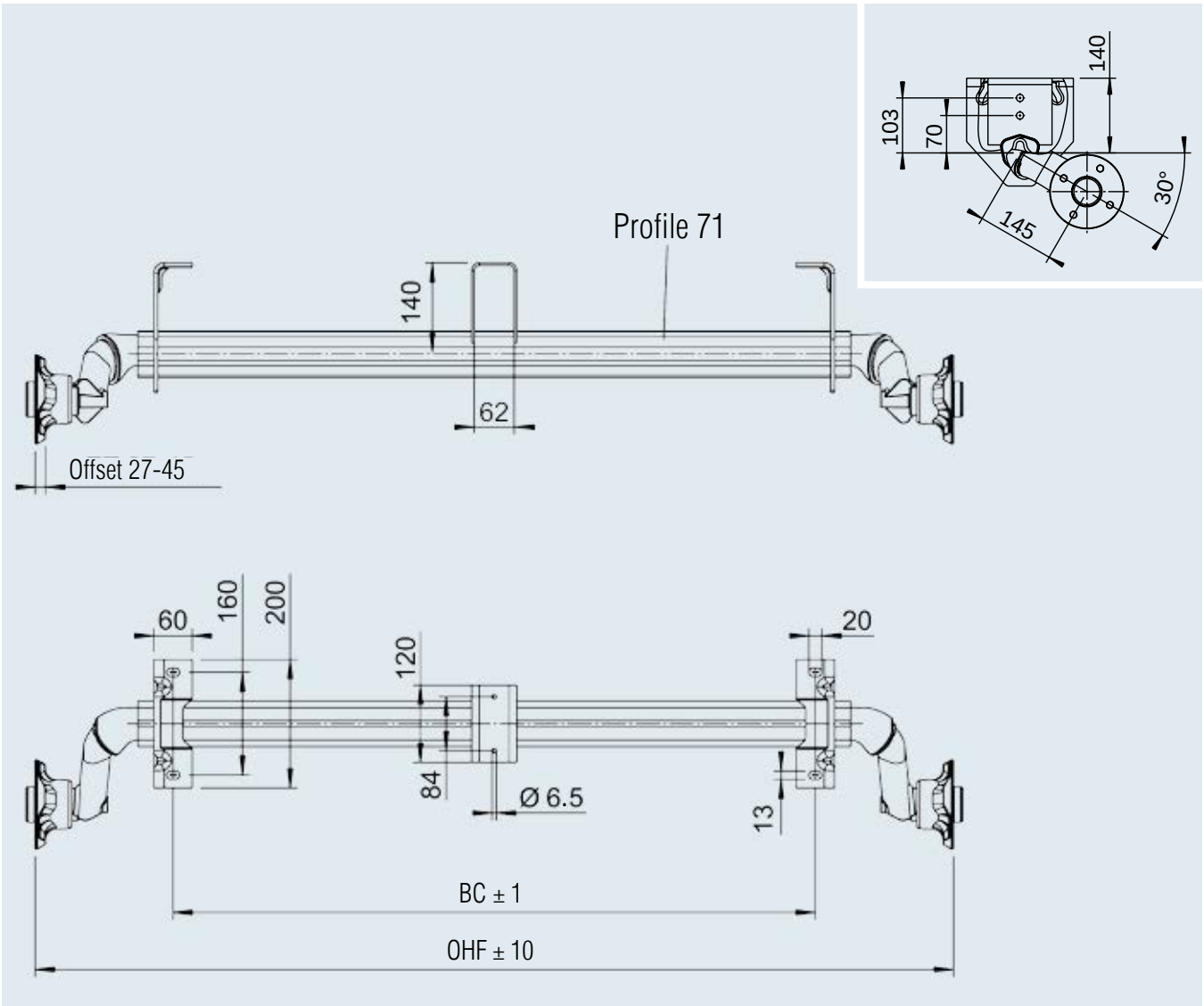

UNBRAKED AXLE 1,000 KG BASIC

100 x 4, 112 x 5

TECHNOLOGY

Model:	BASIC
Axle type:	UBR 850-10
Axle load:	SA 1,000 kg
Suspension:	Hexagonal rubber suspension
Swing arm:	158 mm
Wheel connection:	100x4, 112x5
Wheel bearing:	Compact bearing
Rim centre hole:	Min. 57 mm

SCOPE OF DELIVERY

- Wheel bolts loose
- Operating instructions

SURFACE TREATMENT

- Axle profile hot-dip galvanised



SAP: ACHSE GU UBR EA 1000 PLUS

		Single axle 100x4					Single axle 112x5				
OHF in mm	BC in mm	Wheel bolts Taper M 12x1.5 Axle cpl.					Wheel bolts Ball M 12x1.5 Axle cpl.				
1,200	750	200 562 01	29	–	30	10	200 560 01	29	–	30	10
1,250	800	200 562 02	29	–	30	10	200 560 02	29	–	30	10
1,300	850	200 562 03	29	–	30	10	200 560 03	29	–	30	10
1,350	900	200 562 04	30	–	30	10	200 560 04	30	–	30	10
1,400	950	200 562 05	30	–	30	10	200 560 05	30	–	30	10
1,450	1,000	200 562 06	30	–	30	10	200 560 06	30	–	30	10
1,490	1,040	200 562 07	30	–	30	10	200 560 07	30	–	30	10
1,520	1,070	200 562 08	31	–	30	10	200 560 08	31	–	30	10
1,550	1,100	200 562 09	31	–	30	10	200 560 09	31	–	30	10
1,600	1,150	200 562 10	31	–	30	10	200 560 10	31	–	30	10
1,650	1,200	200 562 11	31	–	30	10	1 222 783	31	–	30	10
1,670	1,220	200 562 12	32	–	30	10	200 560 11	32	–	30	10
1,700	1,250	200 562 13	32	–	30	10	200 560 12	32	–	30	10
1,760	1,310	200 562 14	32	–	30	10	200 560 13	32	–	30	10
1,800	1,350	200 562 15	32	–	30	10	200 560 14	32	–	30	10
1,850	1,400	200 562 16	32	–	30	10	200 560 15	32	–	30	10
1,900	1,450	200 562 17	33	–	30	10	200 560 16	33	–	30	10
1,950	1,500	200 562 18	33	–	30	10	200 560 17	33	–	30	10
1,980	1,530	200 562 19	33	–	30	10	200 560 18	33	–	30	10
2,000	1,550	200 562 20	33	–	30	10	200 560 19	33	–	30	10
2,030	1,580	200 562 21	33	–	30	10	200 560 20	33	–	30	10
2,075	1,625	200 562 22	34	–	30	10	200 560 21	34	–	30	10
2,120	1,670	200 562 23	34	–	30	10	200 560 22	34	–	30	10
2,150	1,700	200 562 24	34	–	30	10	200 560 23	34	–	30	10
2,200	1,750	200 562 25	34	–	30	10	200 560 24	34	–	30	10
2,250	1,800	200 562 26	34	–	30	10	200 560 25	34	–	30	10
2,300	1,850	200 562 27	34	–	30	10	200 560 26	34	–	30	10
2,350	1,900	200 562 28	34	–	30	10	200 560 27	34	–	30	10

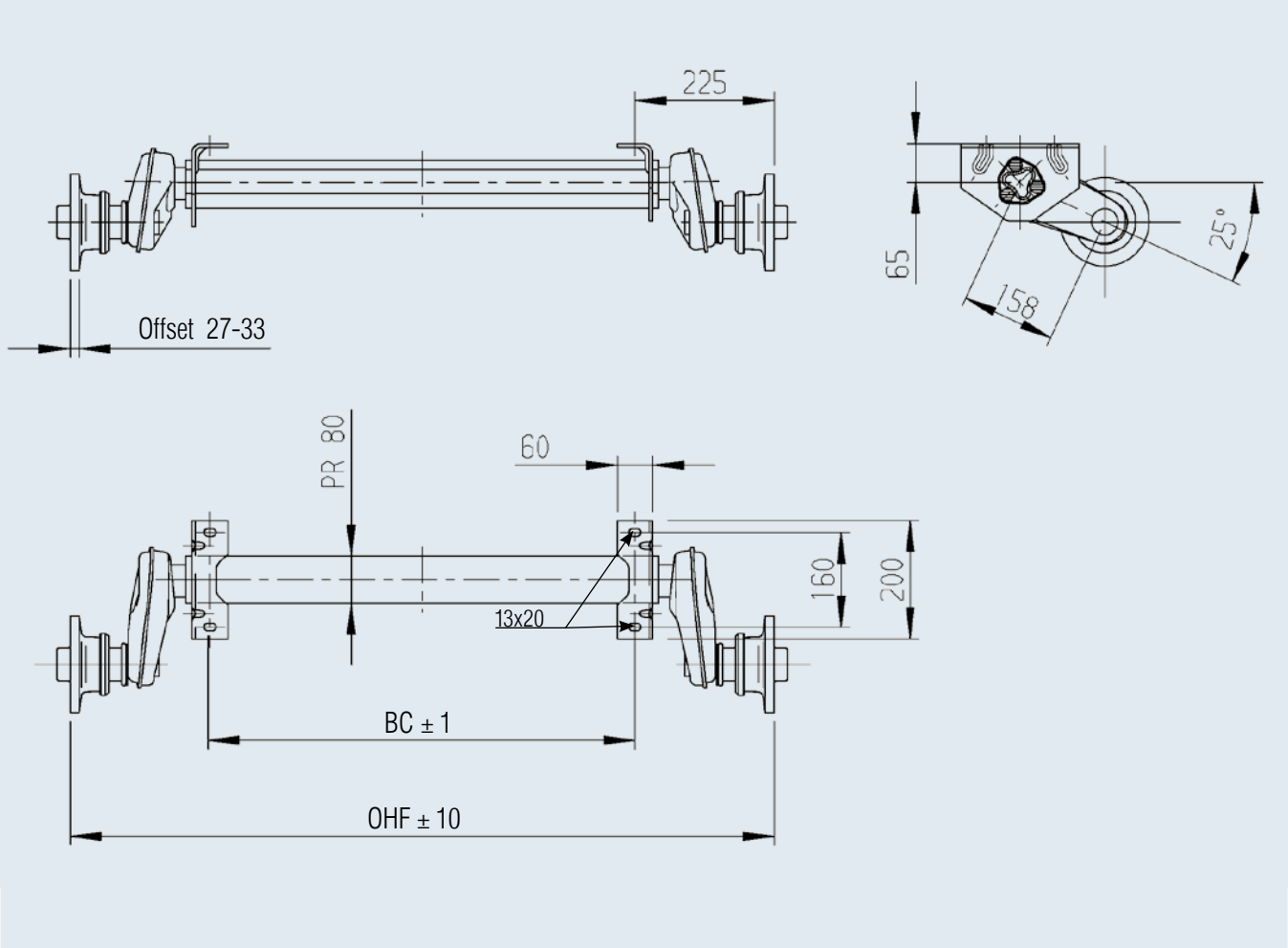

Accessories for bolt-on drawbar connection profiles

Part no. 247 853

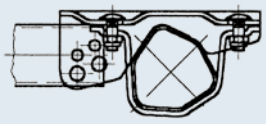

Possible drawbar connection profiles:

- ☐ 60x60

Part no. 249 116

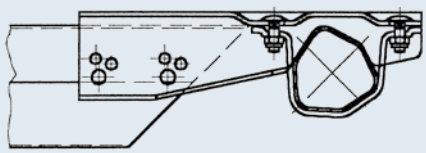

Possible drawbar connection profiles:

- 70.1 VO
- 75 VU
- 102 VB

UNBRAKED AXLE 1,300 KG BASIC

112 x 5

TECHNOLOGY

Model:	BASIC
Axle type:	UBR 1200-5
Axle load:	SA 1,300 kg
Suspension:	Hexagonal rubber suspension
Swing arm:	161.5 mm
Wheel connection:	112x5
Wheel bearing:	Compact bearing
Rim centre hole:	Min. 57 mm

SCOPE OF DELIVERY

- Wheel bolts loose
- Operating instructions

SURFACE TREATMENT

- Axle profile hot-dip galvanised



SAP: ACHSE GU UBR EA 1300 PLUS

Single axle 112x5

Axle cpl.	OHF in mm	BC in mm				
Wheel bolts Ball M 12x1.5						
200 561 01	1,200	750	33	–	30	10
200 561 02	1,250	800	33	–	30	10
200 561 03	1,300	850	33	–	30	10
200 561 04	1,350	900	34	–	30	10
200 561 05	1,400	950	34	–	30	10
1 222 364	1,450	1,000	34	–	30	10
200 561 06	1,490	1,040	34	–	30	10
200 561 07	1,520	1,070	35	–	30	10
200 561 08	1,550	1,100	35	–	30	10
200 561 09	1,600	1,150	35	–	30	10
200 561 10	1,650	1,200	35	–	30	10
200 561 11	1,670	1,220	36	–	30	10
200 561 12	1,700	1,250	36	–	30	10
200 561 13	1,760	1,310	36	–	30	10
200 561 14	1,800	1,350	36	–	30	10
200 561 15	1,850	1,400	36	–	30	10
200 561 16	1,900	1,450	37	–	30	10
200 561 17	1,950	1,500	37	–	30	10
200 561 18	1,980	1,530	37	–	30	10
200 561 19	2,000	1,550	37	–	30	10
200 561 20	2,030	1,580	37	–	30	10
200 561 21	2,075	1,625	38	–	30	10
200 561 22	2,120	1,670	38	–	30	10
200 561 23	2,150	1,700	38	–	30	10
200 561 24	2,200	1,750	38	–	30	10
200 561 25	2,250	1,800	38	–	30	10
200 561 26	2,300	1,850	38	–	30	10
200 561 27	2,350	1,900	38	–	30	10

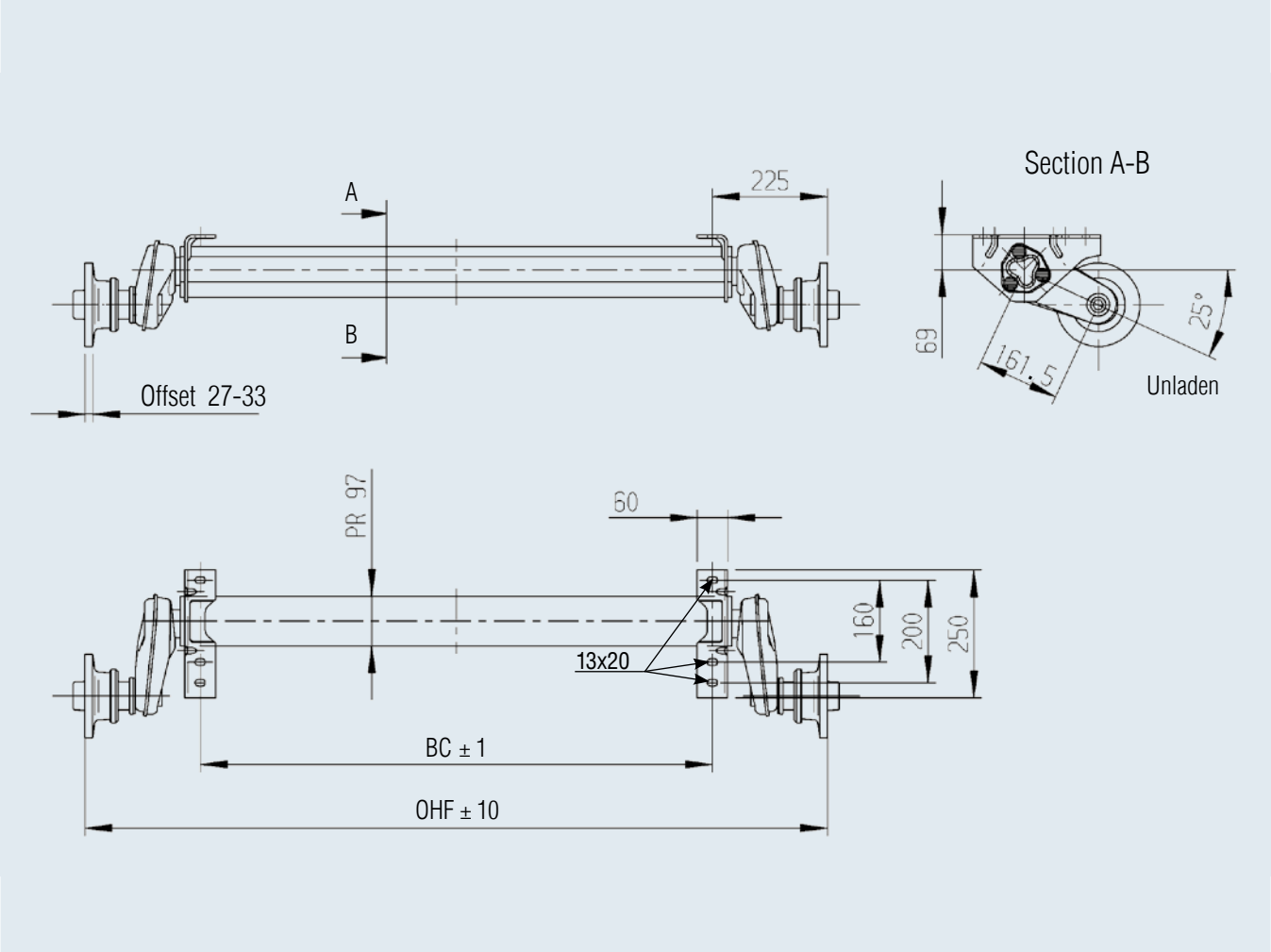

Accessories for bolt-on drawbar connection profiles

Part no. 247 684

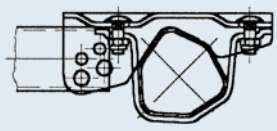

Possible drawbar connection profiles:

- Ø 70
- Ø 88.9
- Ø 101.6
- ☐ 60x60
- ☐ 70x70
- ☐ 100x100

Part no. 249 117

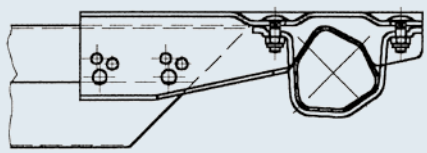

Possible drawbar connection profiles:

- ☐ 80x140
- ☐ 80x160
- ☐ 100x160
- ☐ 100x177
- ☐ 120x120
- ☐ 120x160
- ☐ 120x177

UNBRAKED AXLE 1,500 KG BASIC

112 x 5

TECHNOLOGY

Model:	BASIC
Axle type:	1600-3
Axle load:	SA 1,500 kg
Wheel connection:	112x5
Suspension:	Hexagonal rubber suspension
Swing arm:	161.5 mm
Wheel bearing:	Compact bearing
Rim centre hole:	Min. 57 mm

SCOPE OF DELIVERY

- Wheel bolts loose
- Operating instructions

SURFACE TREATMENT

- Axle profile hot-dip galvanised



SAP: ACHSE GU UBR EA 1500 PLUS

Single axle 112x5

Axle cpl.	**OHF in mm**	**BC in mm**				
Wheel bolts Ball M 12x1.5						
200 569 01	1,200	750	33	–	30	10
200 569 02	1,250	800	33	–	30	10
200 569 03	1,300	850	33	–	30	10
200 569 04	1,350	900	34	–	30	10
200 569 05	1,400	950	34	–	30	10
1 421 519	1,450	1,000	34	–	30	10
200 569 06	1,490	1,040	34	–	30	10
200 569 07	1,520	1,070	35	–	30	10
200 569 08	1,550	1,100	35	–	30	10
200 569 09	1,600	1,150	35	–	30	10
200 569 10	1,650	1,200	35	–	30	10
200 569 11	1,670	1,220	36	–	30	10
200 569 12	1,700	1,250	36	–	30	10
200 569 13	1,760	1,310	36	–	30	10
200 569 14	1,800	1,350	36	–	30	10
200 569 15	1,850	1,400	36	–	30	10
200 569 16	1,900	1,450	37	–	30	10
200 569 17	1,950	1,500	37	–	30	10
200 569 18	1,980	1,530	37	–	30	10
200 569 19	2,000	1,550	37	–	30	10
200 569 20	2,030	1,580	37	–	30	10
200 569 21	2,075	1,625	38	–	30	10
200 569 22	2,120	1,670	38	–	30	10
200 569 23	2,150	1,700	38	–	30	10
200 569 24	2,200	1,750	38	–	30	10
200 569 25	2,250	1,800	38	–	30	10
200 569 26	2,300	1,850	38	–	30	10
200 569 27	2,350	1,900	38	–	30	10

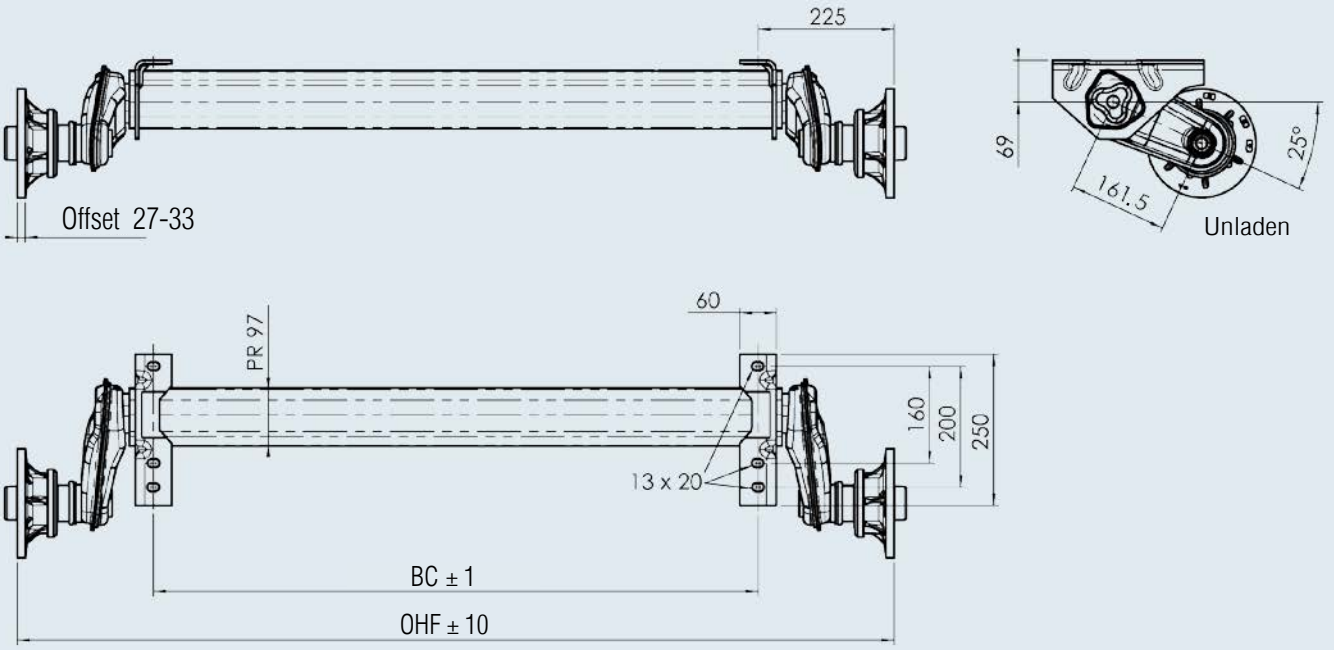

Accessories for bolt-on drawbar connection profiles

Part no. 247 684

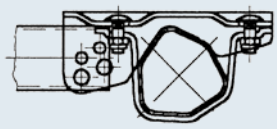

Possible drawbar connection profiles:

- Ø 70
- Ø 88.9
- Ø 101.6
- ☐ 60x60
- ☐ 70x70
- ☐ 100x100

Part no. 249 117

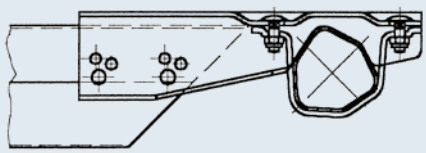

Possible drawbar connection profiles:

- ☐ 80x140
- ☐ 80x160
- ☐ 100x160
- ☐ 100x177
- ☐ 120x120
- ☐ 120x160
- ☐ 120x177

UNBRAKED HALF AXLES

750 kg / 112 x 5 watertight and 1,000 kg / 100 x 4

SURFACE TREATMENT

- Axle profile hot-dip galvanised

SCOPE OF DELIVERY

- Wheel bolts loose
- Operating instructions

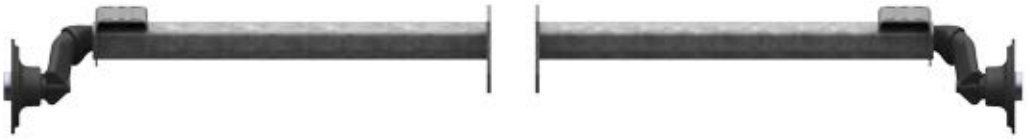

Part no. 1 426 205

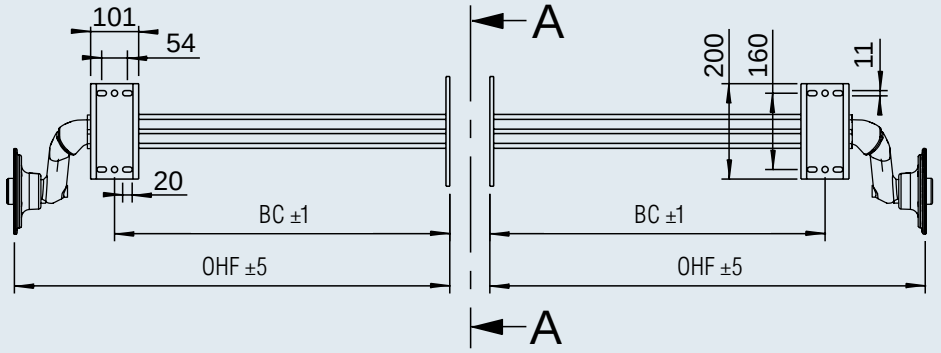

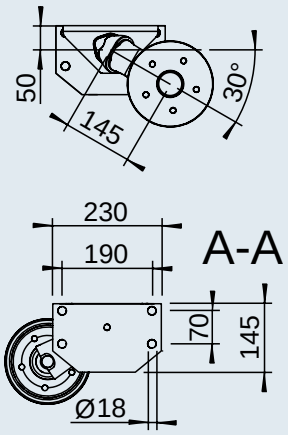



Part no. 1 421 391

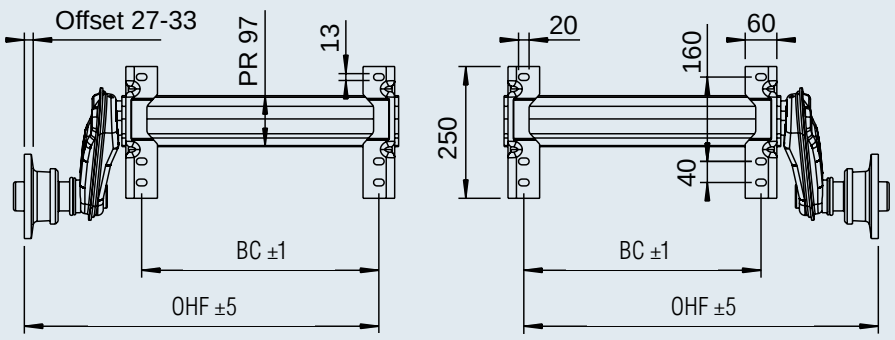

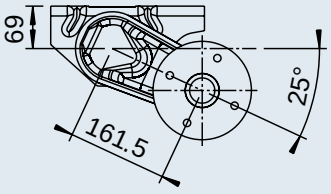

SAP: ACHSE GU UBR HA 750 OPTIMA WD

Part no.	Axle load per pair kg	Type	Waterproof	Wheel brake	Wheel connec-tion	BC mm	OHF mm				
1 426 205	750	750-5	Yes	No	112x5	703	913	33	–	30	10
1 421 391	1,000	1000-3	No	No	100x4	450	673	37	–	30	10

AL-KO UNBRAKED AXLES

750 / 1,500 / 1,800 kg PLUS

PLUS UNBRAKED AXLES – VARIANTS / DETAILS

PLUS unbraked axles "details"	750 kg	1,500kg
Gross weight kg, single axle	750	1,500
Gross weight kg, tandem axle	–	–
Suitable for	Trailers of all types	Trailers of all types
Type of suspension	Leaf suspension	Leaf suspension
Swing arm design	Leaf suspension	Leaf suspension
Swing arm length (mm)	Leaf suspension	Leaf suspension
Suspension comfort set-up	←	
Axle profile, diameter	Square, 50 mm	Square, 60 mm
Suspension maintenance	Maintenance-free	Maintenance-free
Wheel bearing design	Compact bearing	Compact bearing
Bearing maintenance required?	Maintenance-free	Maintenance-free
Independent wheel suspension	No	No
Wheel arch damage possible with extreme overload?	No	No
Axle stub connection to swing arm	Bolted	Bolted
Toe-in adjustment for minimal tyre wear possible?	No	No
Options / surcharge		
Watertight bearing available	Yes	Yes
Shock absorber bracket fastening	Welded	Welded

	1,800 kg	**1,800 kg**
	1,800	1,800
	–	–
	Trailers of all types	Trailers of all types
	Leaf suspension	Hexagonal rubber suspension
	Leaf suspension	Forged
	Leaf suspension	175
	Above average (finer, more comfortable) →	
	Square, 70 mm	Hexagonal, 110 mm
	Maintenance-free	Maintenance-free
	Compact bearing	Compact bearing
	Maintenance-free	Maintenance-free
	No	Yes
	No	No
	Bolted	Bolted
	No	Yes
	Yes	Yes
	Welded	Welded

RIGID UNBRAKED AXLE PLUS

750/1,500/1,800 kg PLUS with leaf suspension



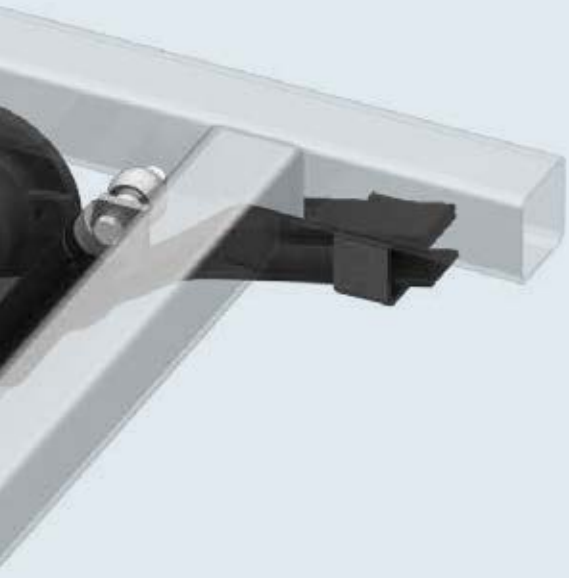

YOUR ADVANTAGE

- Modular system, i.e. you can choose between:
  A) Axle complete (supplied unmounted)
  B) Individual axle components

- The leaf springs and shock absorbers are clamped onto the axle profile

- The axle tube is a sturdy, commercially available square tube

- Wheel hub with stub either:
  A) For screwing in = AL-KO concept
  (simple to exchange during service)
  B) Or for welding in = produced by customer

- Thanks to the screw-in system, the axle tube and fastening plates can be hot-dip galvanised

- Wheel hub as standard with compact bearing

- Wheel hub optionally in watertight version

RIGID UNBRAKED AXLE 750 KG PLUS

98 x 4 and 100 x 4

TECHNOLOGY

Model: PLUS
Axle type: LS 750
Axle load: SA 750 kg
Wheel connection: 98x4 / 100x4

Comply with installation guidelines!

SCOPE OF DELIVERY

- Wheel bolts loose

SURFACE TREATMENT

- Axle profile hot-dip galvanised

ACCESSORIES

- See following pages



SAP: ACHSE STARR UBR EA 750

OHF in mm	BC in mm	Single axle with wheel connection 98x4 RIGID UBR PLUS LS 750 Wheel bolts Taper M 12x1.5 Axle cpl.	Single axle with wheel connection 100x4 RIGID UBR PLUS LS 750 Wheel bolts Taper 12x1.5 Axle cpl.				
1,130	700	200 571 01	200 571 49	15.0	-	50	15
1,180	750	200 571 02	200 571 50	15.5	-	50	15
1,230	800	200 571 03	200 571 51	15.5	-	50	15
1,280	850	200 571 04	200 571 52	16.0	-	50	15
1,330	900	200 571 05	200 571 53	16.0	-	50	15
1,380	950	200 571 06	200 571 54	16.5	-	50	15
1,430	1,000	142 155 9	142 152 1	17.0	-	50	15
1,480	1,050	200 571 07	200 571 55	17.0	-	50	15
1,530	1,100	200 571 08	200 571 56	17.5	-	50	15
1,580	1,150	200 571 09	200 571 57	17.5	-	50	15
1,630	1,200	200 571 10	200 571 58	18.0	-	50	15
1,680	1,250	200 571 11	200 571 59	18.0	-	50	15
1,730	1,300	200 571 12	200 571 60	18.5	-	50	15
1,780	1,350	200 571 13	200 571 61	19.0	-	50	15
1,830	1,400	200 571 14	200 571 62	19.0	-	50	15
1,880	1,450	200 571 15	200 571 63	19.5	-	50	15
1,930	1,500	200 571 16	200 571 64	20.0	-	50	15
1,980	1,550	200 571 17	200 571 65	20.0	-	50	15
2,030	1,600	200 571 18	200 571 66	20.5	-	50	15
2,080	1,650	200 571 19	200 571 67	20.5	-	50	15
2,130	1,700	200 571 20	200 571 68	21.0	-	50	15
2,180	1,750	200 571 21	200 571 69	21.0	-	50	15
2,230	1,800	200 571 22	200 571 70	21.5	-	50	15
2,280	1,850	200 571 23	200 571 71	22.0	-	50	15
2,330	1,900	200 571 24	201 571 72	22.0	-	50	15

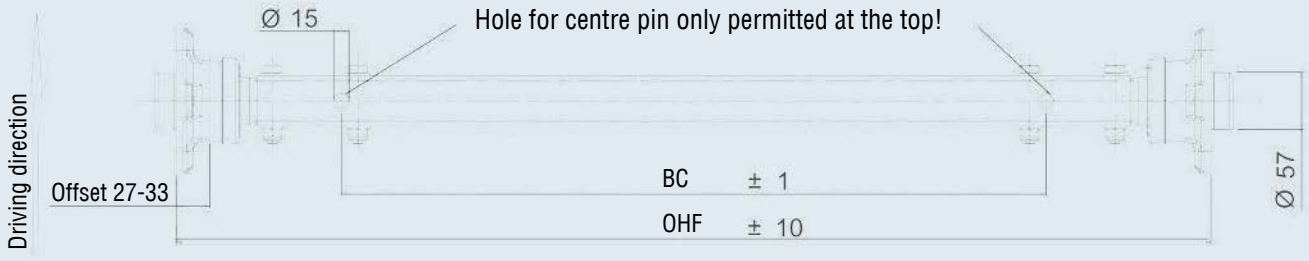
Ø 15
Hole for centre pin only permitted at the top!
Driving direction
Offset 27-33
BC ± 1
OHF ± 10
Ø 57

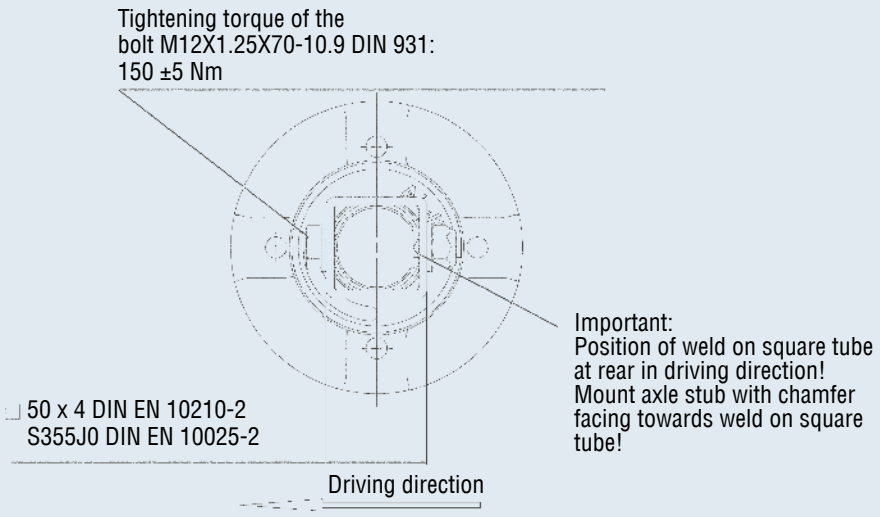
Tightening torque of the
bolt M12X1.25X70-10.9 DIN 931:
150 ±5 Nm
Important:
Position of weld on square tube
at rear in driving direction!
Mount axle stub with chamfer
facing towards weld on square
tube!
50 x 4 DIN EN 10210-2
S355J0 DIN EN 10025-2
Driving direction

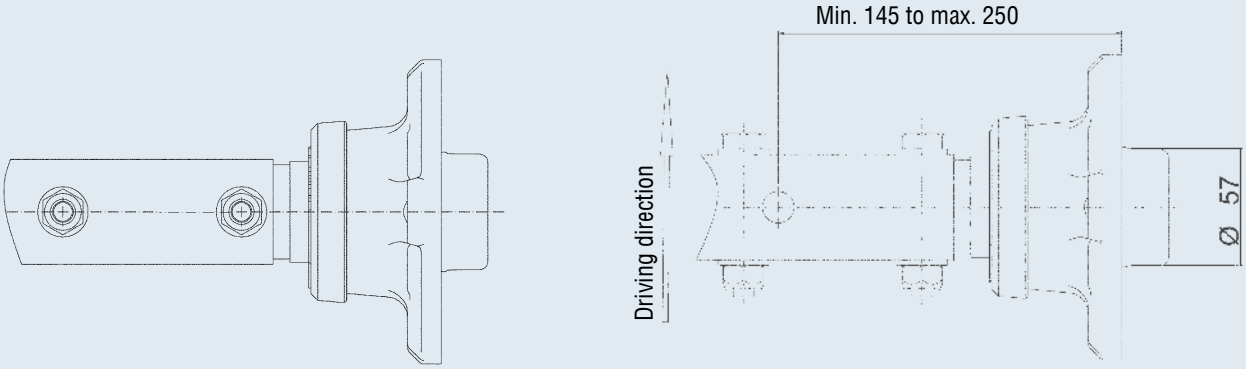
Min. 145 to max. 250
Driving direction
Ø 57

RIGID UNBRAKED AXLE 1,500 KG PLUS

112 x 5

TECHNOLOGY

Model: PLUS
Axle type: LS 1500
Axle load: SA 1,500 kg
Wheel connection: 112 x 5 – M12 x 1.5

Comply with installation guidelines!

SCOPE OF DELIVERY

- Wheel bolts loose

SURFACE TREATMENT

- Axle profile hot-dip galvanised

ACCESSORIES

- See following pages



SAP: ACHSE STARR UBR EA 1500 PLUS

OHF in mm	BC in mm	Single axle with wheel connection 112x5 RIGID UBR PLUS LS 1500 Wheel bolts Ball M 12x1.5 Axle cpl.	Single axle with wheel connection 112x5 watertight RIGID UBR PLUS LS 1500 WD Wheel bolts Ball M 12x1.5 Axle cpl.				
1,150	700	200 578 01	200 579 01	24	-	50	15
1,200	750	200 578 02	200 579 02	24.5	-	50	15
1,250	800	200 578 03	200 579 03	24.9	-	50	15
1,300	850	200 578 04	200 579 04	25.3	-	50	15
1,350	900	200 578 05	200 579 05	25.7	-	50	15
1,400	950	200 578 06	200 579 06	26.2	-	50	15
1,450	1,000	1 422 441	200 579 07	26.6	-	50	15
1,500	1,050	200 578 07	200 579 08	27	-	50	15
1,550	1,100	200 578 08	200 579 09	27.5	-	50	15
1,600	1,150	200 578 09	200 579 10	27.9	-	50	15
1,650	1,200	200 578 10	200 579 11	28.3	-	50	15
1,700	1,250	200 578 11	200 579 12	28.7	-	50	15
1,750	1,300	200 578 12	200 579 13	29.2	-	50	15
1,800	1,350	200 578 13	200 579 14	29.6	-	50	15
1,850	1,400	200 578 14	200 579 15	30	-	50	15
1,900	1,450	200 578 15	200 579 16	30.4	-	50	15
1,950	1,500	200 578 16	200 579 17	30.9	-	50	15
2,000	1,550	200 578 17	200 579 18	31.3	-	50	15
2,050	1,600	200 578 18	200 579 19	31.7	-	50	15
2,100	1,650	200 578 19	200 579 20	32.2	-	50	15
2,150	1,700	200 578 20	200 579 21	32.6	-	50	15
2,200	1,750	200 578 21	200 579 22	33	-	50	15
2,250	1,800	200 578 22	200 579 23	33.4	-	50	15
2,300	1,850	200 578 23	200 579 24	33.9	-	50	15
2,350	1,900	200 578 24	200 579 25	34.3	-	50	15

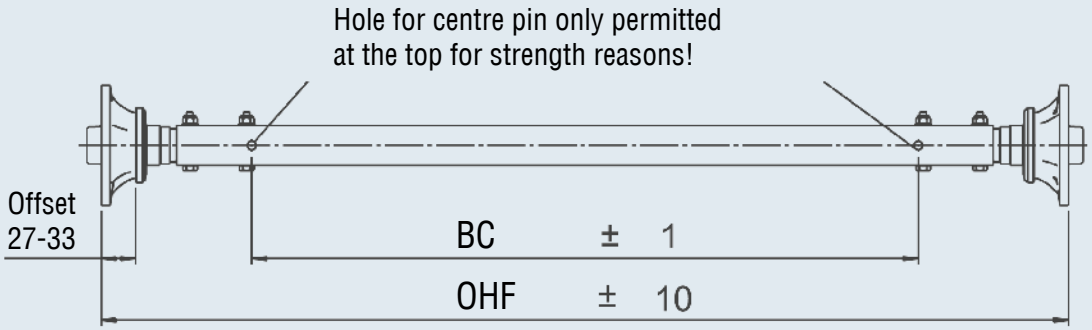
Hole for centre pin only permitted
at the top for strength reasons!
Offset
27-33
BC ± 1
OHF ± 10

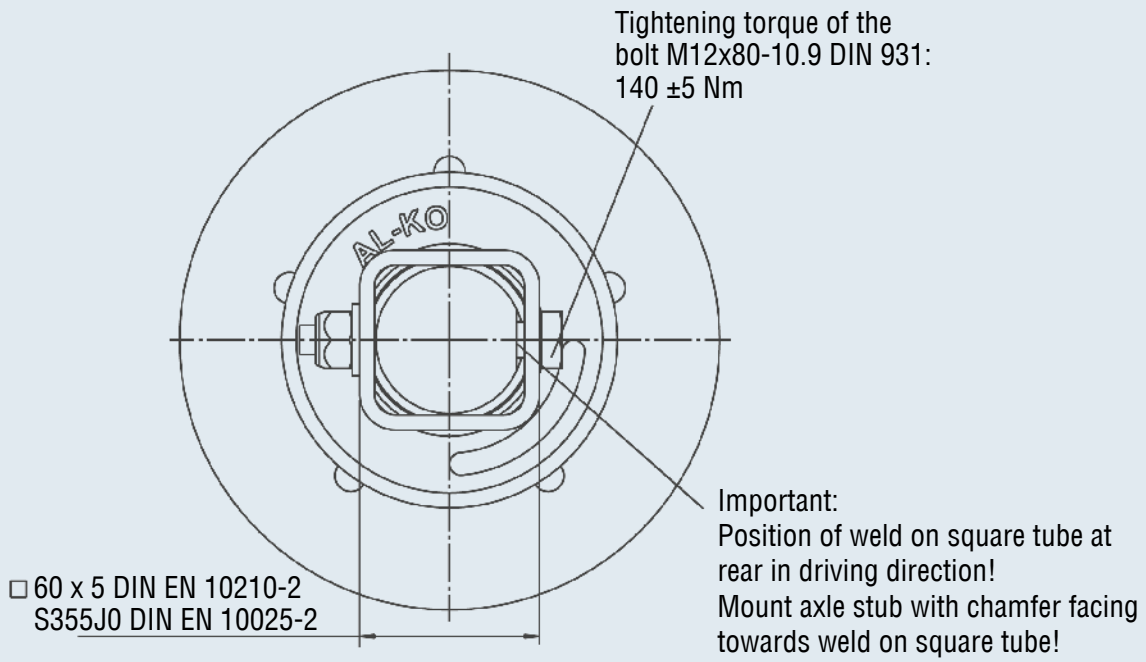
Tightening torque of the
bolt M12x80-10.9 DIN 931:
140 ±5 Nm
AL-KO
□ 60 x 5 DIN EN 10210-2
S355J0 DIN EN 10025-2
Important:
Position of weld on square tube at
rear in driving direction!
Mount axle stub with chamfer facing
towards weld on square tube!

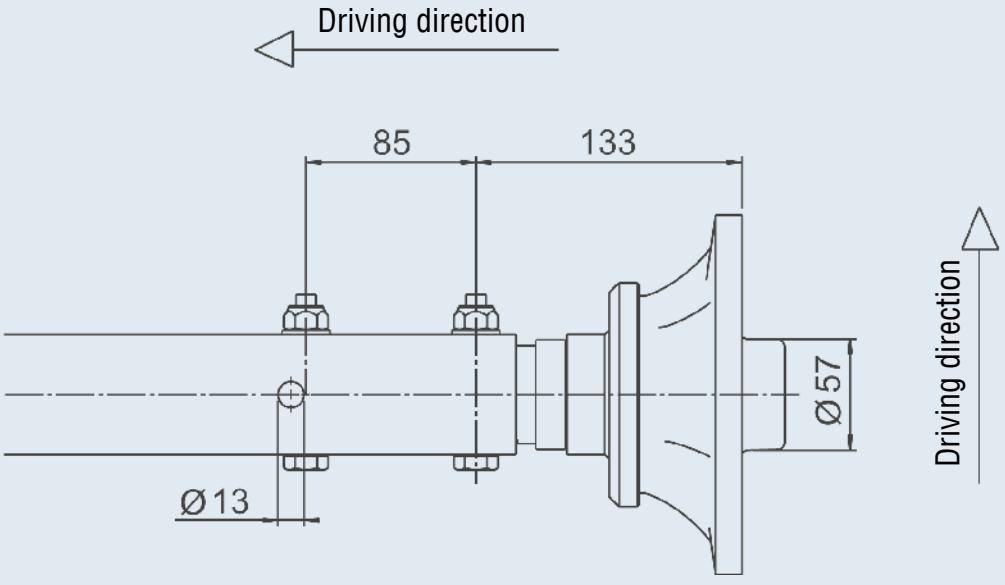
Driving direction
85
133
Ø 57
Ø 13
Driving direction

RIGID UNBRAKED AXLE 1,800 KG PLUS

112 x 5

TECHNOLOGY

Model: PLUS
Axle type: BS 1800
Axle load: SA 1,800 kg
Wheel connection: 112 x 5 – M12 x 1.5

SCOPE OF DELIVERY

- Wheel bolts loose

SURFACE TREATMENT

- Axle profile hot-dip galvanised

ACCESSORIES

- See following pages

Comply with installation guidelines!



SAP: ACHSE STARR UBR EA 1800 PLUS

OHF in mm	BC in mm	Single axle with wheel connection 112x5 RIGID UBR PLUS BS 1800 Wheel bolts Ball M 12x1.5 Axle cpl.				
1,200	700	200 580 01	34.3	-	50	15
1,250	750	200 580 02	34.8	-	50	15
1,300	800	200 580 03	35.3	-	50	15
1,350	850	200 580 04	35.8	-	50	15
1,400	900	200 580 05	36.4	-	50	15
1,450	950	200 580 06	36.9	-	50	15
1,500	1,000	1 422 437	37.4	-	50	15
1,550	1,050	200 580 07	37.9	-	50	15
1,600	1,100	200 580 08	38.4	-	50	15
1,650	1,150	200 580 09	39	-	50	15
1,700	1,200	200 580 10	39.5	-	50	15
1,750	1,250	200 580 11	40	-	50	15
1,800	1,300	200 580 12	40.5	-	50	15
1,850	1,350	200 580 13	41	-	50	15
1,900	1,400	200 580 14	41.6	-	50	15
1,950	1,450	200 580 15	42.1	-	50	15
2,000	1,500	200 580 16	42.6	-	50	15
2,050	1,550	200 580 17	43.1	-	50	15
2,100	1,600	200 580 18	43.6	-	50	15
2,150	1,650	200 580 19	44.1	-	50	15
2,200	1,700	200 580 20	44.7	-	50	15
2,250	1,750	200 580 21	45.2	-	50	15
2,300	1,800	200 580 22	45.7	-	50	15
2,350	1,850	200 580 23	46.2	-	50	15
2,400	1,900	200 580 24	46.7	-	50	15

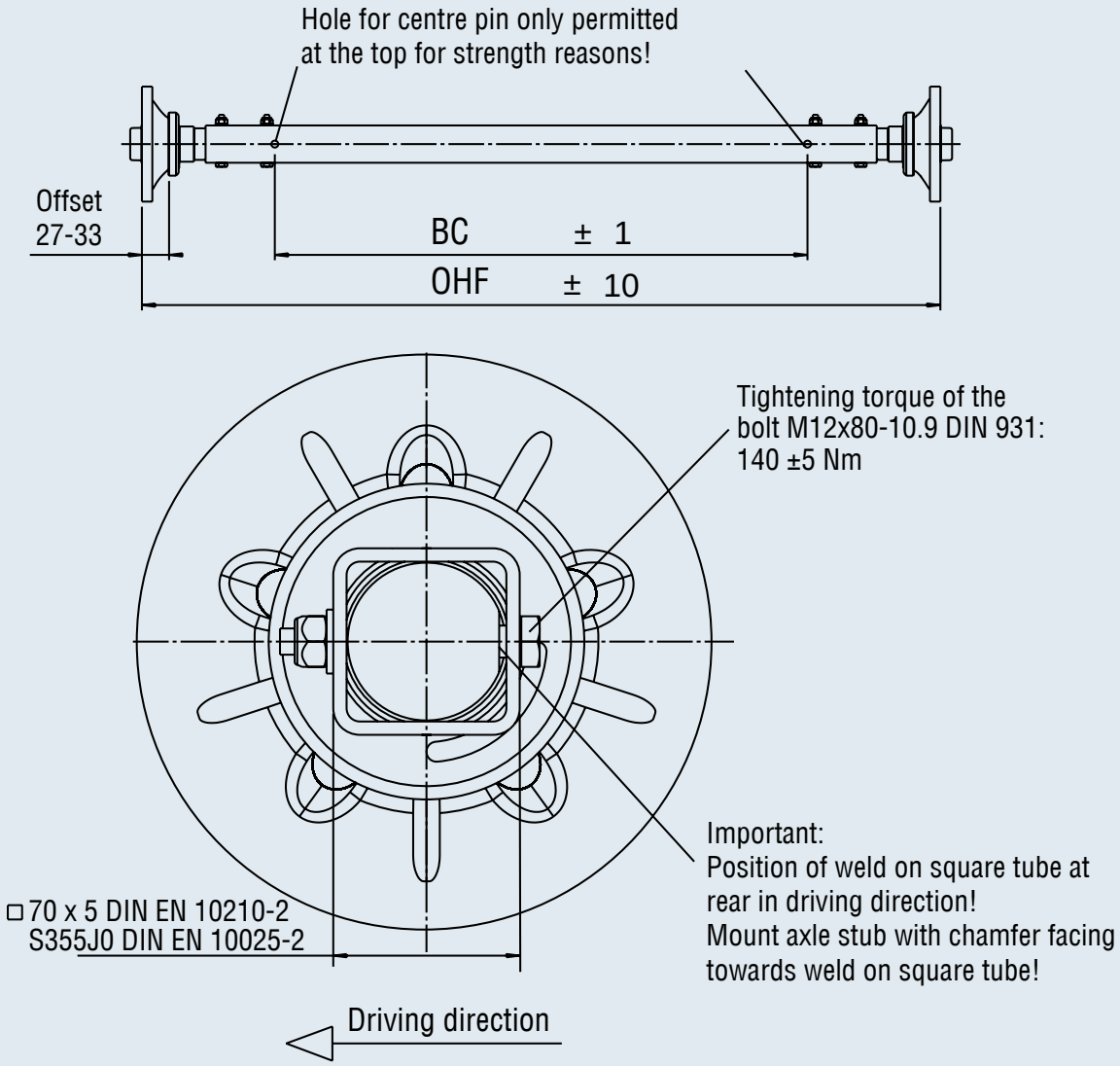
Hole for centre pin only permitted
at the top for strength reasons!
Offset
27-33
BC ± 1
OHF ± 10
Tightening torque of the
bolt M12x80-10.9 DIN 931:
140 ±5 Nm
□ 70 x 5 DIN EN 10210-2
S355J0 DIN EN 10025-2
Important:
Position of weld on square tube at
rear in driving direction!
Mount axle stub with chamfer facing
towards weld on square tube!
Driving direction
85
150
Ø 61
Ø 13
Driving direction

UNBRAKED AXLE 1,800 KG PLUS

112 x 5

TECHNOLOGY

Model:	PLUS
Axle type:	1800-9 PLUS
Axle load:	SA 1,800 kg
Wheel connection:	112x5
Suspension:	Hexagonal rubber suspension
Swing arm:	175 mm
Wheel bearing:	Compact bearing
Rim centre hole:	Min. 66.5 mm

SCOPE OF DELIVERY

- Wheel bolts loose
- Operating instructions

SURFACE TREATMENT

- Axle profile hot-dip galvanised



SAP: ACHSE GU UBR EA 1800 PLUS

OHF in mm	BC in mm	Single axle 112x5 Wheel bolts Ball M 12x1.5 Axle cpl.				
1,400	900	200 570 01	58	–	30	10
1,450	950	200 570 02	58	–	30	10
1,500	1,000	1 421 520	58	–	30	10
1,540	1,040	200 570 03	59	–	30	10
1,570	1,070	200 570 04	59	–	30	10
1,600	1,100	200 570 05	59	–	30	10
1,650	1,150	200 570 06	59	–	30	10
1,700	1,200	200 570 07	60	–	30	10
1,720	1,220	200 570 08	60	–	30	10
1,750	1,250	200 570 09	60	–	30	10
1,810	1,310	200 570 10	60	–	30	10
1,850	1,350	200 570 11	60	–	30	10
1,900	1,400	200 570 12	61	–	30	10
1,950	1,450	200 570 13	61	–	30	10
2,000	1,500	200 570 14	61	–	30	10
2,030	1,530	200 570 15	61	–	30	10
2,050	1,550	200 570 16	62	–	30	10
2,080	1,580	200 570 17	62	–	30	10
2,100	1,600	200 570 18	62	–	30	10
2125	1,625	200 570 19	62	–	30	10
2,170	1,670	200 570 20	62	–	30	10
2,200	1,700	200 570 21	63	–	30	10
2,250	1,750	200 570 22	63	–	30	10
2,300	1,800	200 570 23	63	–	30	10
2,350	1,850	200 570 24	63	–	30	10

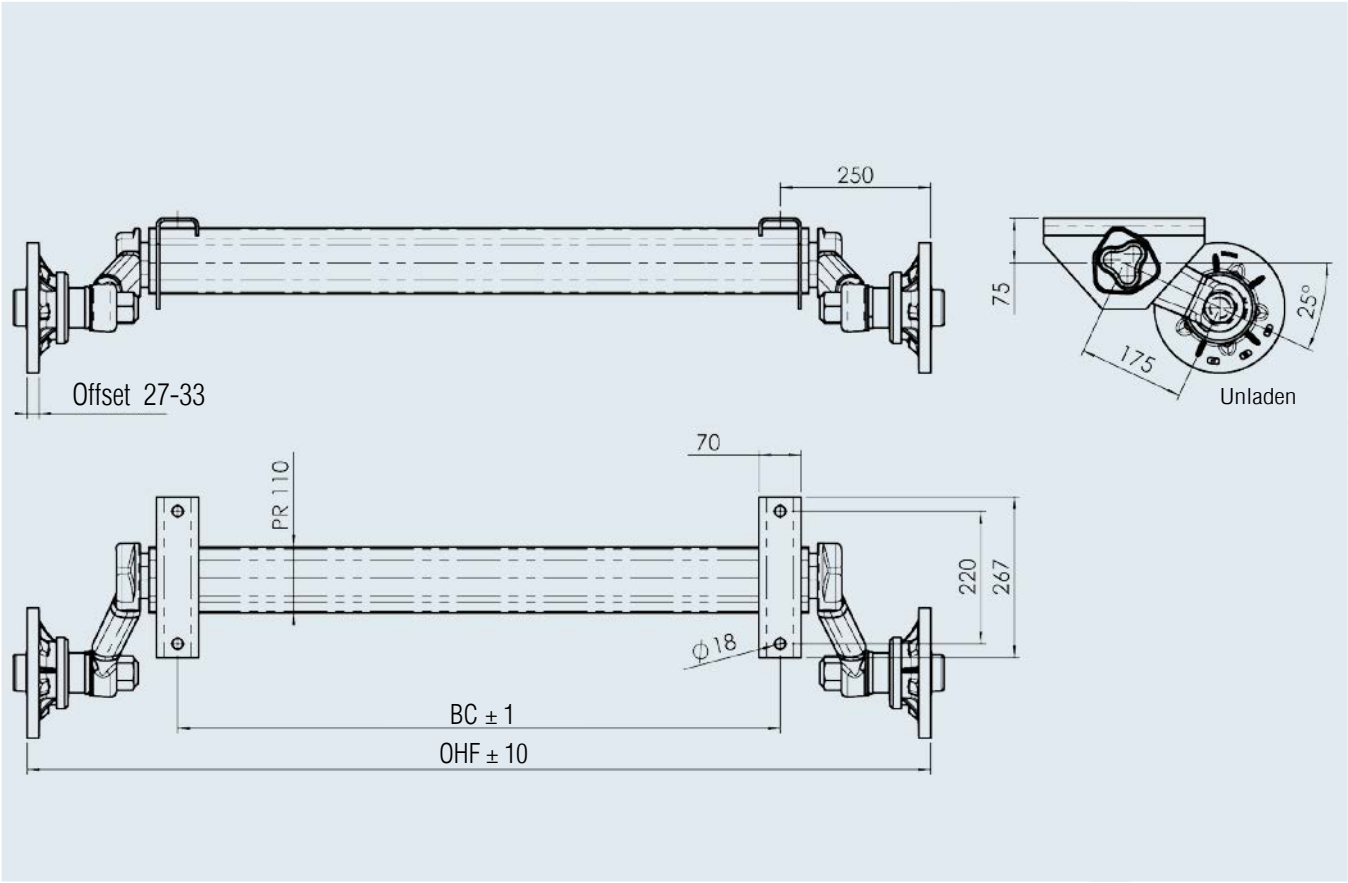
250
Offset 27-33
75
175
25°
Unladen
70
PR 110
220
267
ϕ18
BC ± 1
OHF ± 10

HUB AND STUB AXLE SETS FOR WHEEL LOAD

250 kg with deep groove ball bearing for welding in

IMPORTANT!

As per ECE Directive R13 / Directive EC 2007/46, only unbraked trailers with a permitted gross weight of up to 750 kg may be brought into circulation. Special regulations for specific countries must be observed!

SCOPE OF DELIVERY

- See order overview.
- Wheel bolts not included in scope of delivery!
  Please order separately *(see table of contents)*.

SURFACE TREATMENT

- Synthetic resin dip-coating black

POSSIBLE WHEEL CONNECTIONS

- On request
- Suitable for rims with centre hole min. 57 mm



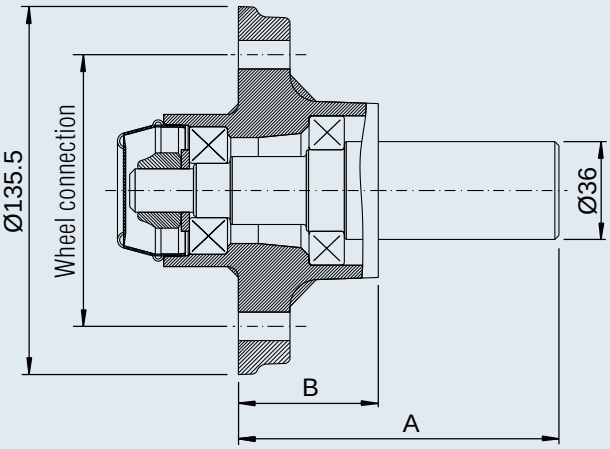

SAP: NABE 98 X4/M12X1,5 250KG KPL M STUMMEL

Hub with stub for welding in

Part no.	Wheel load per hub (kg)		Wheel connection		Offset	Dimensions		Splash guard	Bearing type				
	Up to max. 140 km/h	Up to max. 40 km/h	Connection mm	Thread mm x mm	mm	A mm	B mm	Yes/no					
1 731 238	250	300	98x4	M12 x 1.5	27-45	118	51.5	No	Deep groove ball bearing	2.9	–	150	On request
1 656 570	250	300	100x4	M12 x 1.5	27-45	118	51.5	No	Deep groove ball bearing	2.9	–	150	On request

HUB AND STUB AXLE SETS FOR WHEEL LOAD

375 kg with compact bearing for screwing in



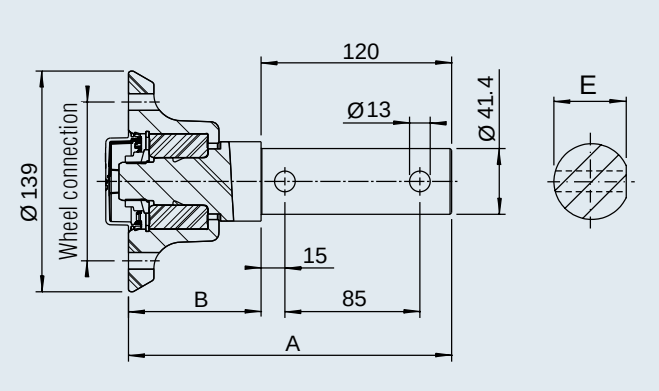



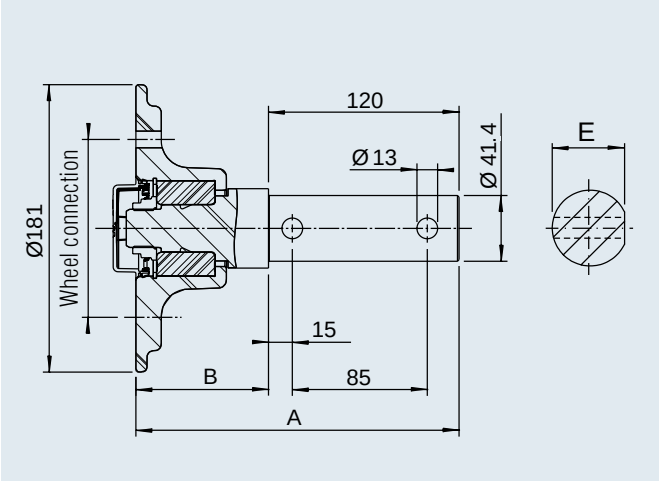

SAP: NABE PLUS 100X4/M12X1,5 375KG KPL

Hub with stub for screwing in

Part no.	Wheel load per hub (kg)		Wheel connection		Offset	Dimensions			Splash guard	Bearing type			
	Up to max. 140 km/h	Up to max. 40 km/h	Connection mm	Thread mm x mm	mm	A mm	B mm	E mm	Yes/no				
1730789	375	450	100x4	M12x1.5	27 - 45	203.5	83.5	39.5	Yes	Compact	4.2	– 150	10
1730788	375	450	98x4	M12x1.5	27 - 45	203.5	83.5	39.5	Yes	Compact	4.2	– 150	On request
1730787	375	450	112x5	M12x1.5	27 - 45	203.5	83.5	39.5	Yes	Compact	4.5	– 150	On request

SAP: NABE PLUS 100X4/M12X1,5 375KG KPL WD

Hub watertight with stub for screwing in

Part no.	Wheel load per hub (kg)		Wheel connection		Offset	Dimensions			Splash guard	Bearing type			
	Up to max. 140 km/h	Up to max. 40 km/h	Connection mm	Thread mm x mm	mm	A mm	B mm	E mm	Yes/no				
1730790	375	450	100x4	M12x1.5	27 - 45	203.5	83.5	39.5	Yes	Compact	4.2	– 150	On request
1730791	375	450	98x4	M12x1.5	27 - 45	203.5	83.5	39.5	Yes	Compact	4.2	– 150	On request
1730778	375	450	112x5	M12x1.5	27 - 45	203.5	83.5	39.5	Yes	Compact	4.5	– 150	On request

HUB AND STUB AXLE SETS FOR WHEEL LOAD

650 kg, 750 kg, 900 kg with compact bearing for welding in

IMPORTANT!

As per ECE Directive R13 / Directive EC 2007/46, only unbraked trailers with a permitted gross weight of up to 750 kg may be brought into circulation. Special regulations for specific countries must be observed!

SCOPE OF DELIVERY

- (See order overview)
- Wheel bolts not included in scope of delivery!
  Please order separately *(see table of contents).*

SURFACE TREATMENT

- Synthetic resin dip-coating black

POSSIBLE WHEEL CONNECTIONS

- On request
- Suitable for rims with centre hole min. 57 mm



650 / 750 kg



900 kg

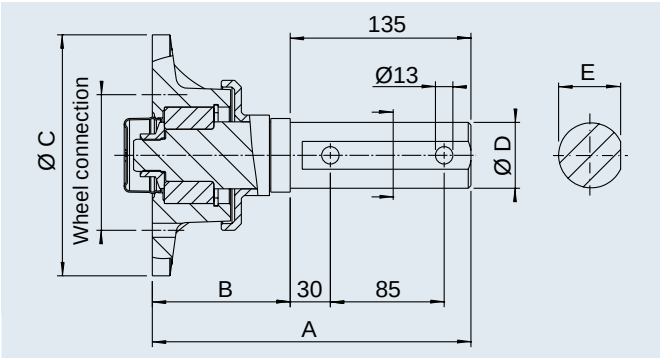

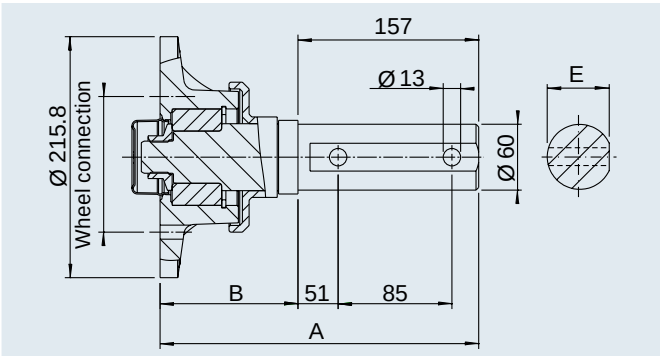

SAP: NABE PLUS 100X4/M12X1,5 650KG KPL

Hub with stub for screwing in

Part no.	Wheel load per hub (kg)		Wheel connection		Offset	Dimensions					Splash guard	Bearing type				
	Up to max. 140 km/h	Up to max. 40 km/h	Connection mm	Thread mm x mm	mm	A mm	B mm	C mm	D mm	E mm	Yes/no					
1731239	650	750	100x4	M12x1.5	27-33	238	103	160	49.2	46.9	Yes	Compact	7	–	150	10
1225751	650	750	112x5	M12x1.5	27-33	238	103	160	49.2	46.9	Yes	Compact	7	–	150	10
1225703	750	850	112x5	M12x1.5	27-33	238	103	180	50	49	Yes	Compact	7.6	–	150	20
1225702	900	1000	112x5	M12x1.5	27-33	254.5	97.5	215.8	60	59	Yes	Compact	12	–	150	20

SAP: NABE PLUS 100X4/M12X1,5 650KG KPL WD

Hub watertight with stub for screwing in

Part no.	Wheel load per hub (kg)		Wheel connection		Offset	Dimensions					Splash guard	Bearing type				
	Up to max. 140 km/h	Up to max. 40 km/h	Connection mm	Thread mm x mm	mm	A mm	B mm	C mm	D mm	E mm	Yes/no					
1731237	650	750	100x4	M12x1.5	27-33	238	103	160	49.2	46.9	Yes	Compact	6.8	–	150	10
1225767	650	750	112x5	M12x1.5	27-33	238	103	160	49.2	46.9	Yes	Compact	6.8	–	150	10
1225708	750	850	112x5	M12x1.5	27-33	241	106	160	50	49	Yes	Compact	7.8	–	150	20

HUB AND STUB AXLE SETS FOR WHEEL LOAD

1,100 kg with tapered roller bearing for welding in



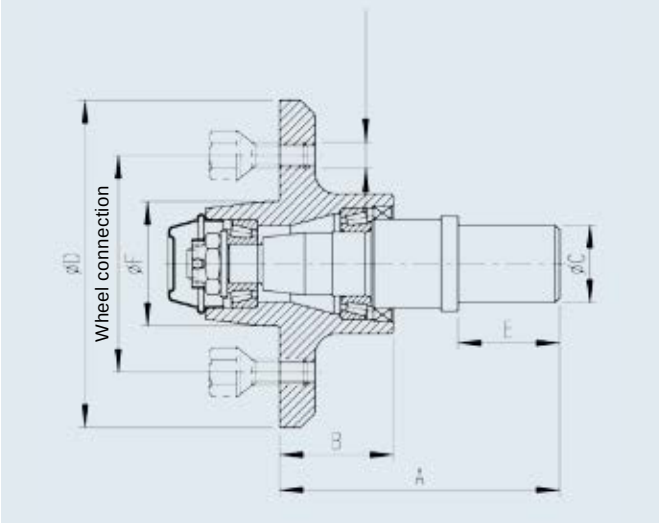

SAP: NABE 205X6 ET 0 1100

Hub with stub for screwing in

Part no.	Wheel load per hub (kg)		Wheel connection		Offset	Dimensions						Splash guard	Bearing type				
	Up to max. 140 km/h	Up to max. 40 km/h	Connec-tion mm	Thread mm x mm	mm	A mm	B mm	C mm	D mm	E mm	F mm	Yes/no					
218591	1,100	1,100	205x6	M18x1.5	0	167	68	44.8	250	42	160	No	Tapered roller bearing	11.5	–	150	On request

AL-KO BRAKED AXLES

Product differentiation

Axles are required for diverse trailer types and application areas. Each application area has individual requirements in terms of benefit and price.

With our clear axle product differentiation, we offer the optimal solution for each purpose: This also enables you to clearly differentiate your products with optimal value creation.

A maximum of 6 points are possible in the evaluation

Benefit	
Suspension travel = ride comfort	
Spring softness = ride comfort	
Inherent damping = driving stability	
Quality	

BASIC BRAKED AXLES – VARIANTS / DETAILS

BASIC braked axles "details"	**750 kg**	**1,000 kg**	**1,350 kg**	**1,350 kg***
Gross weight kg, single axle	750	1,000	1,350	1,350
Gross weight kg, tandem axle	1,500	1,600	2,700	2,700
Suitable for	Trailers of all types – except caravans			
Type of suspension	Hexagonal rubber suspension	Hexagonal rubber suspension	Hexagonal rubber suspension	Hexagonal rubber suspension
Swing arm design	Forged	Hollow	Hollow	Forged
Swing arm length (mm)	145	160	161.5	160
Suspension comfort set-up	Average	Average	Average	Average
Axle profile, diameter	Hexagonal, 71 mm	Hexagonal, 80 mm	Hexagonal, 97 mm	Hexagonal, 97 mm
Suspension maintenance	Maintenance-free	Maintenance-free	Maintenance-free	Maintenance-free
Wheel brake type	1636 G	1637	2051	2051
Wheel bearing design	Tapered roller bearing	Compact bearing	Compact bearing	Compact bearing
Bearing maintenance required?	Yes	No, maintenance-free	No, maintenance-free	No, maintenance-free
Brake drum with cooling ribs	No	Yes	Yes	Yes
Independent wheel suspension	Yes	Yes	Yes	Yes
Wheel arch damage possible with extreme overload?	No	No	No	No
Better heat dissipation through brake drums with cooling ribs	No	Yes	Yes	Yes
Axle stub connection to swing arm	Welded	Bolted	Bolted	Welded
Toe-in adjustment for minimal tyre wear possible?	No	Yes	Yes	No
Brake pads free of asbestos, corrosion-resistant, without iron content	Yes	Yes	Yes	Yes
Options / surcharge				
Watertight bearing available	No	Yes	Yes	No
Automatic brake adjustment AAA available	No	No	Yes	Yes
Shock absorber bracket fastening	welded	Plug-in	Plug-in	welded







BASIC braked axles	PLUS braked axles	PREMIUM PROFI braked axles
●●	●●●●	●●●●●●
●●	●●●●	●●●●●●
●●●●	●●●●	●●●●●●
●●●●●●	●●●●●●	●●●●●●

4

1,500 kg	1,500 kg*	1,600 kg	1,800 kg	3,500 kg
1,500	1,500	1,600	1,800	3,500
3,000	3,000	3,200	3,500	3,500
Trailers of all types – except caravans				
Hexagonal rubber suspension	Hexagonal rubber suspension	Hexagonal rubber suspension	Hexagonal rubber suspension	Hexagonal rubber suspension
Hollow	Forged	Forged	Forged	Forged
161.5	160	160	160	150
Average	Average	Average	Average	Average
Hexagonal, 97 mm	Hexagonal, 97 mm	Hexagonal, 97 mm	Hexagonal, 110 mm	Hexagonal, 120 mm
Maintenance-free	Maintenance-free	Maintenance-free	Maintenance-free	Maintenance-free
2051	2051	2361	2361	3081
Compact bearing	Compact bearing	Compact bearing	Compact bearing	Tapered roller bearing
No, maintenance-free	No, maintenance-free	No, maintenance-free	No, maintenance-free	Yes
Yes	Yes	Yes	Yes	No
Yes	Yes	Yes	Yes	Yes
No	No	No	No	No
Yes	Yes	Yes	Yes	No
Bolted	Welded	Bolted	Welded	Welded
Yes	No	Yes	No	No
Yes	Yes	Yes	Yes	Yes
Yes	No	Yes	Yes	No
Yes	Yes	Yes	Yes	No
Plug-in	welded	welded	welded	welded

*in preparation

BRAKED AXLE 750 KG BASIC

100 x 4

TECHNOLOGY

Model: BASIC
Axle type: B 700-5
Axle load: SA 750 kg
Wheel brake: 1636 G
Suspension: Hexagonal rubber suspension

Swing arm: 145 mm
Wheel connection: 100x4
Wheel bearing: Tapered roller bearing
Rim centre hole: Min. 57 mm



SAP: ACHSE GU LNGS GRM EA 750

		Single axle				Single axle with top hat profile				
		Wheel bolts				Wheel bolts				
		Taper				Taper				
		M 12x1.5				12x1.5				
OHF in mm	BC in mm	Axle cpl.				Axle cpl.				
1,140	700	200 380 01	35	30	10	200 380 18	38	-	30	10
1,190	750	200 380 02	36	30	10	200 380 19	39	-	30	10
1,240	800	200 380 03	36	30	10	200 380 20	39	-	30	10
1,290	850	200 380 04	36	30	10	200 380 21	39	-	30	10
1,340	900	200 380 05	36	30	10	200 380 22	39	-	30	10
1,390	950	200 380 06	37	30	10	200 380 23	40	-	30	10
1,440	1,000	294 711	37	30	10	200 380 24	40	-	30	10
1,490	1,050	200 380 07	37	30	10	200 380 25	40	-	30	10
1,540	1,100	240 031	37	30	10	200 380 26	40	-	30	10
1,590	1,150	200 380 08	38	30	10	200 380 27	41	-	30	10
1,640	1,200	240 032	38	30	10	200 380 28	41	-	30	10
1,690	1,250	240 033	38	30	10	200 380 29	41	-	30	10
1,740	1,300	200 380 09	38	30	10	200 380 30	41	-	30	10
1,790	1,350	200 380 10	39	30	10	200 380 31	42	-	30	10
1,840	1,400	240 034	39	30	10	200 380 32	42	-	30	10
1,890	1,450	200 380 11	39	30	10	200 380 33	42	-	30	10
1,940	1,500	240 035	39	30	10	200 380 34	42	-	30	10
1,990	1,550	240 036	40	30	10	200 380 35	43	-	30	10
2,040	1,600	200 380 12	40	30	10	200 380 36	43	-	30	10
2,090	1,650	200 380 13	40	30	10	200 380 37	43	-	30	10
2,140	1,700	200 380 14	40	30	10	200 380 38	43	-	30	10
2,190	1,750	200 380 15	41	30	10	200 380 39	44	-	30	10
2,240	1,800	200 380 16	41	30	10	200 380 40	44	-	30	10
2,290	1,850	200 380 17	41	30	10	200 380 41	44	-	30	10

SCOPE OF DELIVERY

- Single axle adapter bracket welded onto top hat profile (single axle and tandem adapter bracket)
- Compensation profile for single axle supplied
- Bowden cables loose
- Wheel bolts loose
- Without shock absorber brackets

SURFACE TREATMENT

- Axle profile hot-dip galvanised
- Wheel brake black-primed

ACCESSORIES

- Shock absorber
  (see table of contents)

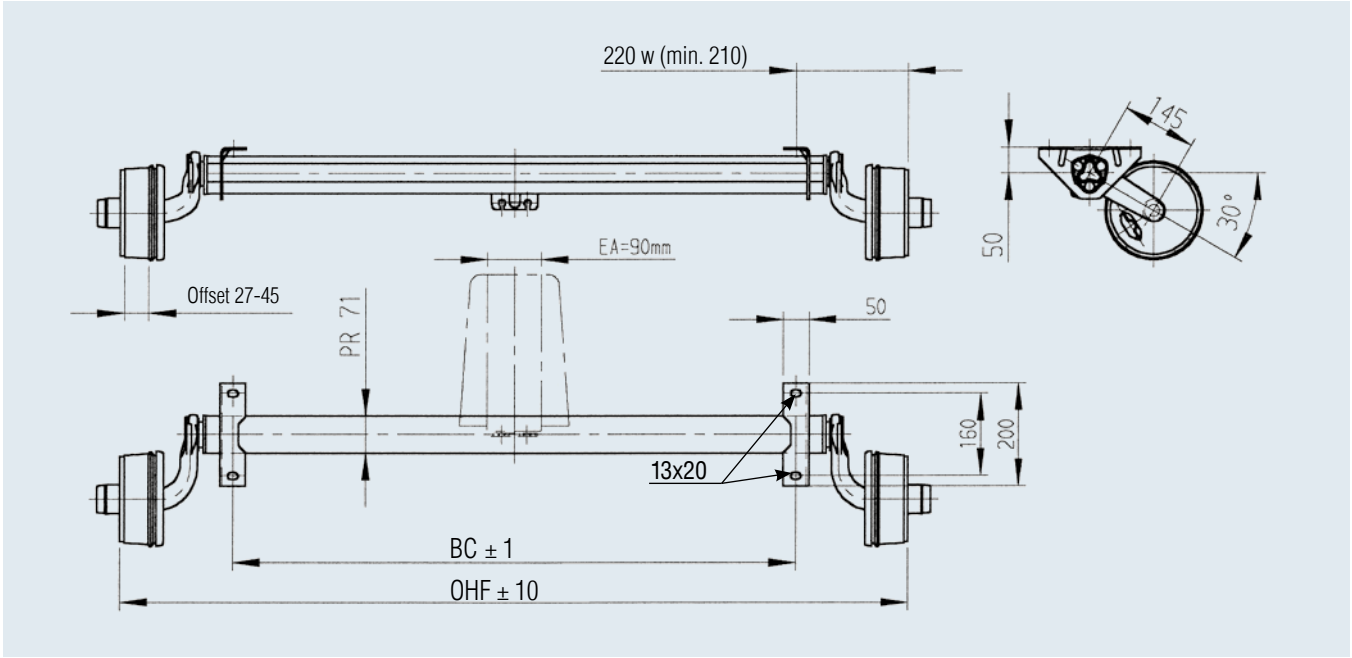

Accessories for shock absorber attachment

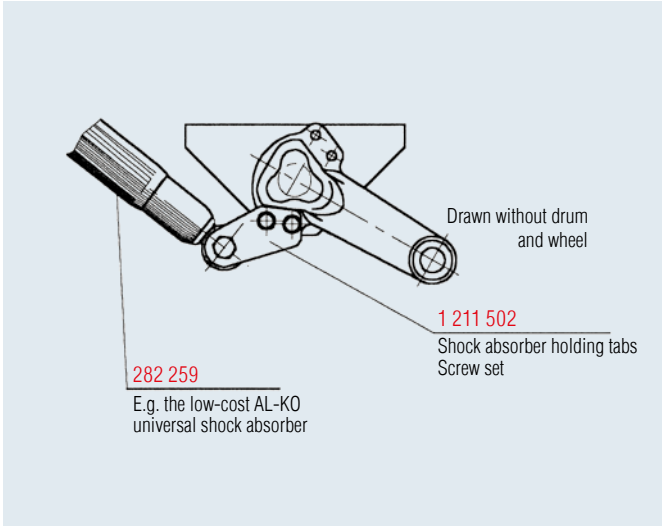

Accessories for top hat profile incl. adapter bracket for single axle

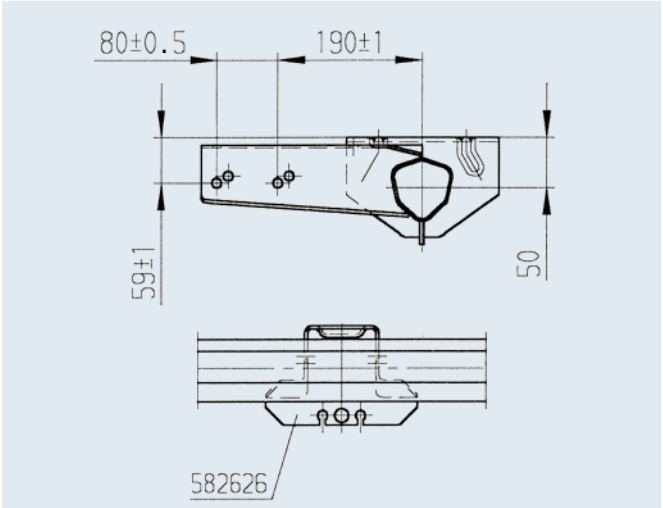

BRAKED AXLE 900 KG BASIC

100 x 4

TECHNOLOGY

Model:	BASIC	Suspension:	Hexagonal rubber suspension
Axle type:	B 850-5	Swing arm:	160 mm
Axle load:	SA 900 kg	Wheel connection:	100x4
	TA 1,600 kg	Wheel bearing:	Compact bearing
Wheel brake:	1637	Rim centre hole:	Min. 57 mm

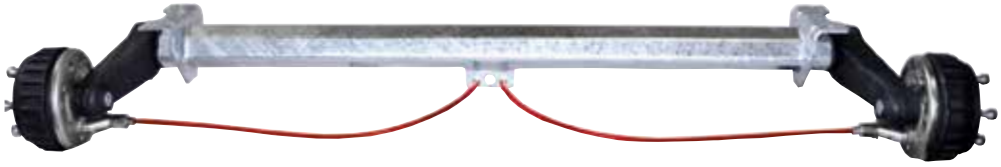

SAP: EURO1ACHSE GRM GLL EA 900

		Single axle		Tandem axle						
		Wheel bolts		Front axle wheel bolts		Rear axle wheel bolts				
OHF in mm	BC in mm	Ball M 12x1.5 Axle cpl.	Taper M 12x1.5 Axle cpl.	Ball M 12x1.5 Axle cpl.	Taper M 12x1.5 Axle cpl.	Ball M 12x1.5 Axle cpl.	Taper M 12x1.5 Axle cpl.			
1,250	800	200 150 01	200 150 02	200 150 03	200 150 04	200 150 05	200 150 06	38	- 30	10
1,300	850	200 151 01	200 151 02	200 151 03	200 151 04	200 151 05	200 151 06	38	- 30	10
1,350	900	200 152 01	200 152 02	200 152 03	200 152 04	200 152 05	200 152 06	38	- 30	10
1,400	950	200 153 01	200 153 02	200 153 03	200 153 04	200 153 05	200 153 06	38	- 30	10
1,450	1,000	244 009 01	244 009	244 009 03	244 009 04	244 009 05	244 009 06	39	- 30	10
1,490	1,040	200 155 01	200 155 02	200 155 03	200 155 04	200 155 05	200 155 06	39	- 30	10
1,520	1,070	200 156 01	200 156 02	200 156 03	200 156 04	200 156 05	200 156 06	39	- 30	10
1,550	1,100	244 010 01	244 010	244 010 03	244 010 04	244 010 05	244 010 06	39	- 30	10
1,600	1,150	200 158 01	200 158 02	200 158 03	200 158 04	200 158 05	200 158 06	39	- 30	10
1,650	1,200	244 011 01	244 011	244 011 03	244 011 04	244 011 05	244 011 06	40	- 30	10
1,670	1,220	200 160 01	200 160 02	200 160 03	200 160 04	200 160 05	200 160 06	40	- 30	10
1,700	1,250	244 012 01	244 012	244 012 03	244 012 04	244 012 05	244 012 06	40	- 30	10
1,760	1,310	200 162 01	200 162 02	200 162 03	200 162 04	200 162 05	200 162 06	40	- 30	10
1,800	1,350	200 163 01	200 163 02	200 163 03	200 163 04	200 163 05	200 163 06	40	- 30	10
1,850	1,400	244 013 01	244 013	244 013 03	244 013 04	244 013 05	244 013 06	41	- 30	10
1,900	1,450	200 165 01	200 165 02	200 165 03	200 165 04	200 165 05	200 165 06	41	- 30	10
1,950	1,500	244 014 01	244 014	244 014 03	244 014 04	244 014 05	244 014 06	41	- 30	10
1,980	1,530	200 167 01	200 167 02	200 167 03	200 167 04	200 167 05	200 167 06	41	- 30	10
2,000	1,550	244 015 01	244 015	244 015 03	244 015 04	244 015 05	244 015 06	42	- 30	10
2,030	1,580	200 169 01	200 169 02	200 169 03	200 169 04	200 169 05	200 169 06	42	- 30	10
2,075	1,625	200 170 01	200 170 02	200 170 03	200 170 04	200 170 05	200 170 06	42	- 30	10
2,120	1,670	200 171 01	200 171 02	200 171 03	200 171 04	200 171 05	200 171 06	42	- 30	10
2,150	1,700	200 172 01	200 172 02	200 172 03	200 172 04	200 172 05	200 172 06	43	- 30	10
2,200	1,750	200 173 01	200 173 02	200 173 03	200 173 04	200 173 05	200 173 06	43	- 30	10
2,250	1,800	200 174 01	200 174 02	200 174 03	200 174 04	200 174 05	200 174 06	43	- 30	10
2,300	1,850	200 175 01	200 175 02	200 175 03	200 175 04	200 175 05	200 175 06	43	- 30	10

SCOPE OF DELIVERY

- Single axle adapter bracket welded onto top hat profile (single axle and tandem adapter bracket)
- Compensation profile for single axle supplied
- Bowden cables loose
- Wheel bolts loose

Separate order for tandem

- Bolt-on tandem adapter bracket 249 236
- Tandem compensation 238 576

SURFACE TREATMENT

- Axle profile hot-dip galvanised
- Wheel brake galvanised

ACCESSORIES

- Shock absorber (see table of contents)

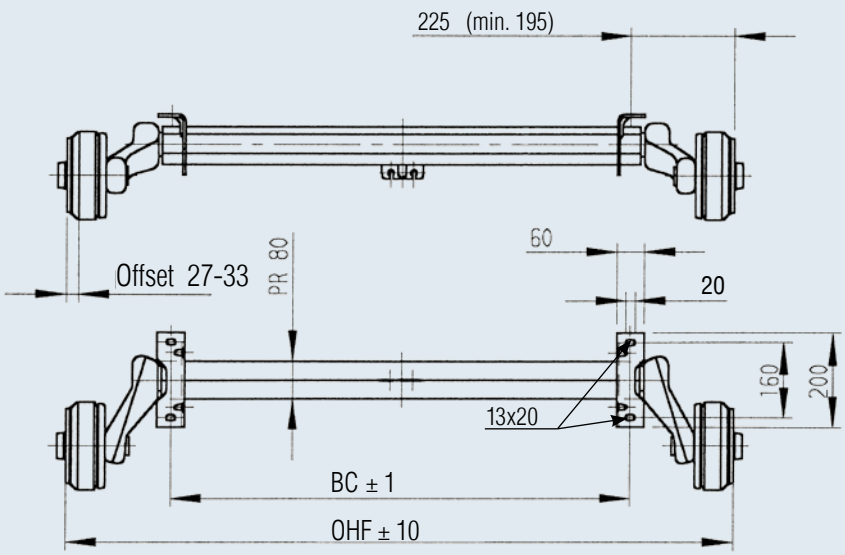

Bowden cable attached at bottom

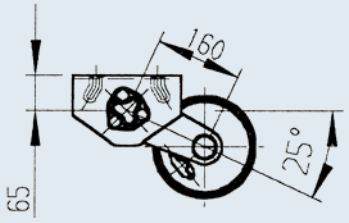

Accessories for bolt-on drawbar connection profiles

Ø 70 / Ø 88.9 / ☐ 60 / ☐ 70 / ☐ 100 — **Part no. 247 853**

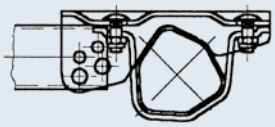

101 VB / 161 VB — **Part no. 249 116**

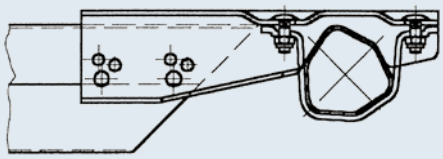

Accessories for tandem

Bolt-on tandem adapter bracket — **Part no. 249 236**

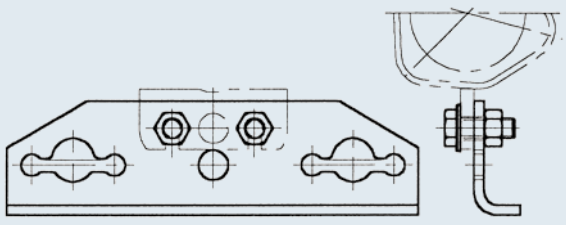

Tandem compensation — **Part no. 238 576**

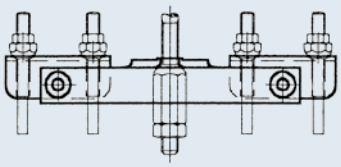

BRAKED AXLE 900 KG BASIC

112 x 5

TECHNOLOGY

Model:	BASIC	Suspension:	Hexagonal rubber suspension
Axle type:	B 850-5	Swing arm:	160 mm
Axle load:	SA 900 kg	Wheel connection:	112x5
	TA 1,600 kg	Wheel bearing:	Compact bearing
Wheel brake:	1637	Rim centre hole:	Min. 57 mm



SAP: EURO1ACHSE GRM GLL EA 900

		Single axle		Tandem axle						
		Wheel bolts		Front axle wheel bolts		Rear axle wheel bolts				
OHF in mm	BC in mm	Ball M 12x1.5 Axle cpl.	Taper M 12x1.5 Axle cpl.	Ball M 12x1.5 Axle cpl.	Taper M 12x1.5 Axle cpl.	Ball M 12x1.5 Axle cpl.	Taper M 12x1.5 Axle cpl.			
1,250	800	200 068 01	200 068 02	200 068 03	200 068 04	200 068 05	200 068 06	38	- 30	10
1,300	850	200 069 01	200 069 02	200 069 03	200 069 04	200 069 05	200 069 06	38	- 30	10
1,350	900	200 070 01	200 070 02	200 070 03	200 070 04	200 070 05	200 070 06	38	- 30	10
1,400	950	200 071 01	200 071 02	200 071 03	200 071 04	200 071 05	200 071 06	38	- 30	10
1,450	1,000	244 016	244 016 02	244 016 03	244 016 04	244 016 05	244 016 06	39	- 30	10
1,490	1,040	200 072 01	200 072 02	200 072 03	200 072 04	200 072 05	200 072 06	39	- 30	10
1,520	1,070	200 073 01	200 073 02	200 073 03	200 073 04	200 073 05	200 073 06	39	- 30	10
1,550	1,100	244 017	244 017 02	244 017 03	244 017 04	244 017 05	244 017 06	39	- 30	10
1,600	1,150	200 074 01	200 074 02	200 074 03	200 074 04	200 074 05	200 074 06	40	- 30	10
1,650	1,200	244 018	244 018 02	244 018 03	244 018 04	244 018 05	244 018 06	40	- 30	10
1,670	1,220	200 075 01	200 075 02	200 075 03	200 075 04	200 075 05	200 075 06	40	- 30	10
1,700	1,250	244 019	244 019 02	244 019 03	244 019 04	244 019 05	244 019 06	40	- 30	10
1,760	1,310	200 076 01	200 076 02	200 076 03	200 076 04	200 076 05	200 076 06	41	- 30	10
1,800	1,350	200 077 01	200 077 02	200 077 03	200 077 04	200 077 05	200 077 06	41	- 30	10
1,850	1,400	244 020	244 020 02	244 020 03	244 020 04	244 020 05	244 020 06	41	- 30	10
1,900	1,450	200 078 01	200 078 02	200 078 03	200 078 04	200 078 05	200 078 06	41	- 30	10
1,950	1,500	244 021	244 021 02	244 021 03	244 021 04	244 021 05	244 021 06	41	- 30	10
1,980	1,530	200 079 01	200 079 02	200 079 03	200 079 04	200 079 05	200 079 06	42	- 30	10
2,000	1,550	244 022	244 022 02	244 022 03	244 022 04	244 022 05	244 022 06	42	- 30	10
2,030	1,580	200 080 01	200 080 02	200 080 03	200 080 04	200 080 05	200 080 06	42	- 30	10
2,075	1,625	200 081 01	200 081 02	200 081 03	200 081 04	200 081 05	200 081 06	42	- 30	10
2,120	1,670	200 082 01	200 082 02	200 082 03	200 082 04	200 082 05	200 082 06	42	- 30	10
2,150	1,700	200 083 01	200 083 02	200 083 03	200 083 04	200 083 05	200 083 06	43	- 30	10
2,200	1,750	200 084 01	200 084 02	200 084 03	200 084 04	200 084 05	200 084 06	43	- 30	10
2,250	1,800	200 085 01	200 085 02	200 085 03	200 085 04	200 085 05	200 085 06	43	- 30	10
2,300	1,850	200 086 01	200 086 02	200 086 03	200 086 04	200 086 05	200 086 06	43	- 30	10

SCOPE OF DELIVERY

- Single axle adapter bracket welded onto top hat profile (single axle and tandem adapter bracket)
- Compensation profile for single axle supplied
- Bowden cables loose
- Wheel bolts loose

Separate order for tandem

- Bolt-on tandem adapter bracket 249 236
- Tandem compensation 238 576

SURFACE TREATMENT

- Axle profile hot-dip galvanised
- Wheel brake galvanised

ACCESSORIES

- Shock absorber
  (see table of contents)

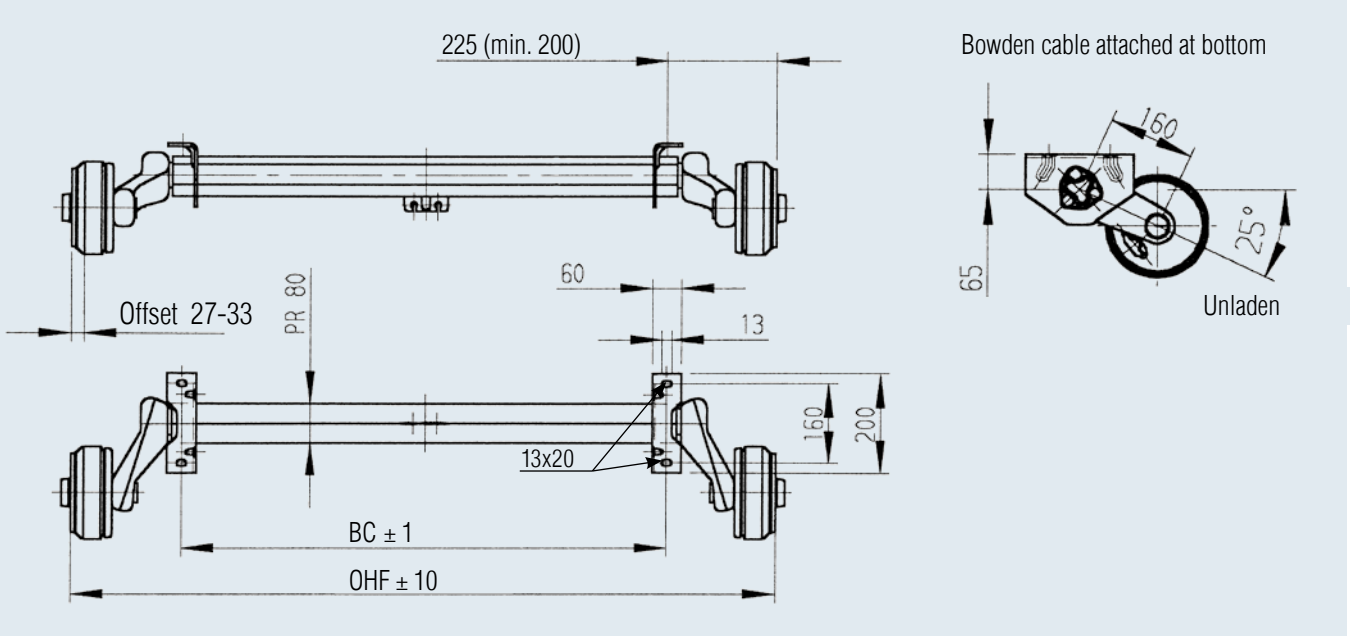

Accessories for bolt-on drawbar connection profiles

Ø 70 / Ø 88.9 / ☐ 60 / ☐ 70 / ☐ 100 — **Part no. 247 853**

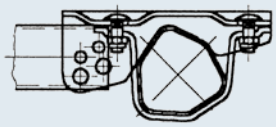

101 VB / 161 VB — **Part no. 249 116**

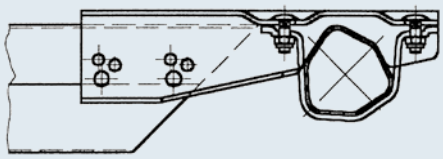

Accessories for tandem

Bolt-on tandem adapter bracket — **Part no. 249 236**

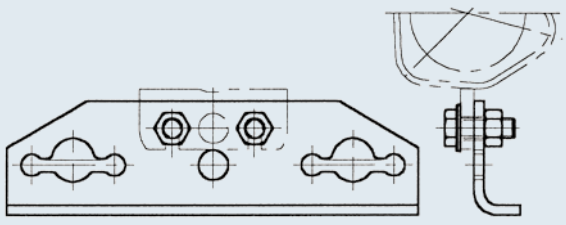

Tandem compensation — **Part no. 238 576**

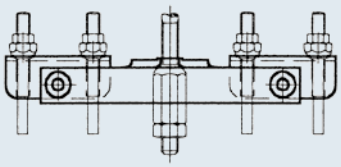

BRAKED AXLE 1,000 KG BASIC

100 x 4

TECHNOLOGY

Model:	BASIC	Wheel brake:	2051	Wheel connection:	100x4
Axle type:	B 850-10	Suspension:	Hexagonal rubber suspension	Wheel bearing:	Compact bearing
Axle load:	SA 1,000 kg TA 2,000 kg	Swing arm:	158 mm	Rim centre hole:	Min. 57 mm



AAA= AL-KO **A**utomatic **A**djustment
(automatic adjustment of the brake pads)

SAP: COMP-ACHSE GRM GLL EA1000

		Single axle		Tandem axle						
		Wheel bolts		Front axle wheel bolts		Rear axle wheel bolts				
		Taper M12x1.5	Taper M12x1.5	Taper M12x1.5	Taper M12x1.5	Taper M12x1.5	Taper M 12x1.5			
OHF in mm	BC in mm	Axle cpl. without AAA	Axle cpl. with AAA	Axle cpl. without AAA	Axle cpl. with AAA	Axle cpl. without AAA	Axle cpl. with AAA			
1,200	750	200 320 52	200 612 01	200 320 54	200 612 29	200 320 56	200 612 57	39	- 25	10
1,250	800	200 321 52	200 612 02	200 321 54	200 612 30	200 321 56	200 612 58	39	- 25	10
1,300	850	200 322 52	200 612 03	200 322 54	200 612 31	200 322 56	200 612 59	39	- 25	10
1,350	900	200 323 52	200 612 04	200 323 54	200 612 32	200 323 56	200 612 60	40	- 25	10
1,400	950	200 324 52	200 612 05	200 324 54	200 612 33	200 324 56	200 612 61	40	- 25	10
1,450	1,000	249 148 02	200 612 06	249 148 04	200 612 34	249 148 06	200 612 62	40	- 25	10
1,490	1,040	200 325 52	200 612 07	200 325 54	200 612 35	200 325 56	200 612 63	40	- 25	10
1,520	1,070	200 326 52	200 612 08	200 326 54	200 612 36	200 326 56	200 612 64	40	- 25	10
1,550	1,100	267 046 02	200 612 09	267 046 04	200 612 37	267 046 06	200 612 65	40	- 25	10
1,600	1,150	200 327 52	200 612 10	200 327 54	200 612 38	200 327 56	200 612 66	40	- 25	10
1,650	1,200	267 047 02	200 612 11	267 047 04	200 612 39	267 047 06	200 612 67	40	- 25	10
1,670	1,220	200 328 52	200 612 12	200 328 54	200 612 40	200 328 56	200 612 68	41	- 25	10
1,700	1,250	267 048 02	200 612 13	267 048 04	200 612 41	267 048 06	200 612 69	41	- 25	10
1,760	1,310	200 329 52	200 612 14	200 329 54	200 612 42	200 329 56	200 612 70	41	- 25	10
1,800	1,350	200 330 52	200 612 15	200 330 54	200 612 43	200 330 56	200 612 71	41	- 25	10
1,850	1,400	267 049 02	200 612 16	267 049 04	200 612 44	267 049 06	200 612 72	41	- 25	10
1,900	1,450	200 331 52	200 612 17	200 331 54	200 612 45	200 331 56	200 612 73	42	- 25	10
1,950	1,500	267 050 02	200 612 18	267 050 04	200 612 46	267 050 06	200 612 74	42	- 25	10
1,980	1,530	200 332 52	200 612 19	200 332 54	200 612 47	200 332 56	200 612 75	42	- 25	10
2,000	1,550	267 051 02	200 612 20	267 051 04	200 612 48	267 051 06	200 612 76	42	- 25	10
2,030	1,580	200 333 52	200 612 21	200 333 54	200 612 49	200 333 56	200 612 77	42	- 25	10
2,075	1,625	200 334 52	200 612 22	200 334 54	200 612 50	200 334 56	200 612 78	42	- 25	10
2,120	1,670	200 335 52	200 612 23	200 335 54	200 612 51	200 335 56	200 612 79	43	- 25	10
2,150	1,700	200 336 52	200 612 24	200 336 54	200 612 52	200 336 56	200 612 80	43	- 25	10
2,200	1,750	200 337 52	200 612 25	200 337 54	200 612 53	200 337 56	200 612 81	43	- 25	10
2,250	1,800	200 338 52	200 612 26	200 338 54	200 612 54	200 338 56	200 612 82	43	- 25	10
2,300	1,850	200 339 52	200 612 27	200 339 54	200 612 55	200 339 56	200 612 83	43	- 25	10
2,350	1,900	200 340 52	200 612 28	200 340 54	200 612 56	200 340 56	200 612 84	43	- 25	10

SCOPE OF DELIVERY

- Single axle adapter bracket welded onto top hat profile (single axle and tandem adapter bracket)
- Compensation profile for single axle supplied
- Bowden cables loose
- Wheel bolts loose

Separate order for tandem

- Bolt-on tandem adapter bracket 249 236
- Tandem compensation 238 576

SURFACE TREATMENT

- Axle profile hot-dip galvanised
- Wheel brake galvanised

ACCESSORIES

- Shock absorber
  (see table of contents)

4

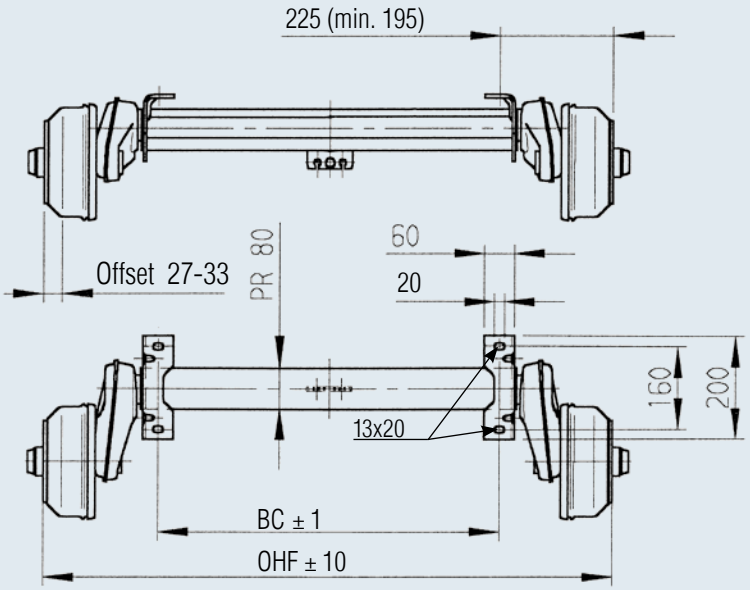

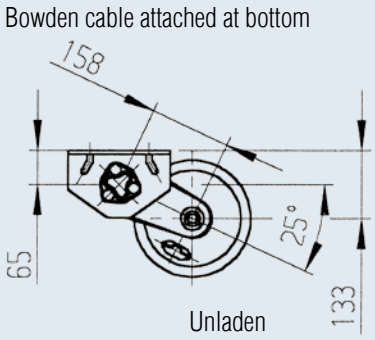

Accessories for bolt-on drawbar connection profiles

Ø 70 / Ø 88.9 / ☐ 60 / ☐ 70 / ☐ 100 — **Part no. 247 853**

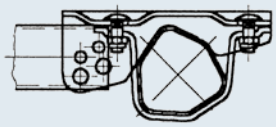

101 VB / 161 VB — **Part no. 249 116**

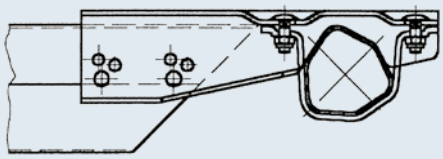

Accessories for tandem

Bolt-on tandem adapter bracket — **Part no. 249 236**

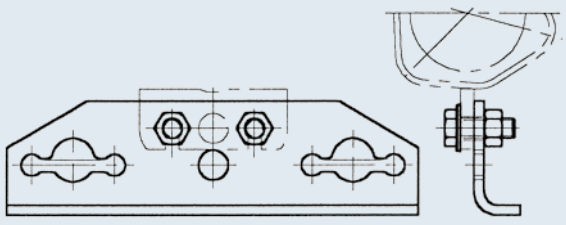

Tandem compensation — **Part no. 238 576**

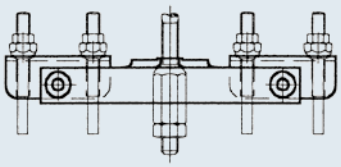

BRAKED AXLE 1,000 KG BASIC

112 x 5

TECHNOLOGY

Model:	BASIC	Wheel brake:	2051	Wheel connection:	112x5
Axle type:	B 850-10	Suspension:	Hexagonal rubber suspension	Wheel bearing:	Compact bearing
Axle load:	SA 1,000 kg TA 2,000 kg	Swing arm:	158 mm	Rim centre hole:	Min. 57 mm

AAA= AL-KO Automatic Adjustment
(automatic adjustment of the brake pads)

SAP: COMP-ACHSE GRM GLL EA1000

OHF in mm	BC in mm	Single axle Axle complete Wheel bolts Ball M 12x1.5 without AAA	Single axle Axle complete Wheel bolts Ball M 12x1.5 with AAA	Tandem front axle Axle complete Wheel bolts Ball M 12x1.5 without AAA	Tandem front axle Axle complete Wheel bolts Ball M 12x1.5 with AAA	Rear axle Axle complete Wheel bolts Ball M 12x1.5 without AAA	Rear axle Axle complete Wheel bolts Ball M 12x1.5 with AAA			
1,200	750	200 150 51	200 585 01	200 150 53	200 585 29	200 150 55	200 585 57	39	- 25	10
1,250	800	200 151 51	200 585 02	200 151 53	200 585 30	200 151 55	200 585 58	39	- 25	10
1,300	850	200 152 51	200 585 03	200 152 53	200 585 31	200 152 55	200 585 59	39	- 25	10
1,350	900	200 153 51	200 585 04	200 153 53	200 585 32	200 153 55	200 585 60	39	- 25	10
1,400	950	200 154 51	200 585 05	200 154 53	200 585 33	200 154 55	200 585 61	39	- 25	10
1,450	1,000	249 149	200 585 06	249 149 03	200 585 34	249 149 05	200 585 62	40	- 25	2/10
1,490	1,040	200 155 51	200 585 07	200 155 53	200 585 35	200 155 55	200 585 63	40	- 25	10
1,520	1,070	200 156 51	200 585 08	200 156 53	200 585 36	200 156 55	200 585 64	40	- 25	10
1,550	1,100	249 470	200 585 09	249 470 03	200 585 37	249 470 05	200 585 65	40	- 25	2/10
1,600	1,150	200 157 51	200 585 10	200 157 53	200 585 38	200 157 55	200 585 66	40	- 25	10
1,650	1,200	249 471	200 585 11	249 471 03	200 585 39	249 471 05	200 585 67	40	- 25	2/10
1,670	1,220	200 158 51	200 585 12	200 158 53	200 585 40	200 158 55	200 585 68	41	- 25	10
1,700	1,250	249 472	200 585 13	249 472 03	200 585 41	249 472 05	200 585 69	41	- 25	2/10
1,760	1,310	200 159 51	200 585 14	200 159 53	200 585 42	200 159 55	200 585 70	41	- 25	10
1,800	1,350	200 160 51	200 585 15	200 160 53	200 585 43	200 160 55	200 585 71	41	- 25	10
1,850	1,400	249 473	200 585 16	249 473 03	200 585 44	249 473 05	200 585 72	41	- 25	2/10
1,900	1,450	200 161 51	200 585 17	200 161 53	200 585 45	200 161 55	200 585 73	41	- 25	10
1,950	1,500	249 474	200 585 18	249 474 03	200 585 46	249 474 05	200 585 74	42	- 25	2/10
1,980	1,530	200 162 51	200 585 19	200 162 53	200 585 47	200 162 55	200 585 75	42	- 25	10
2,000	1,550	249 475	200 585 20	249 475 03	200 585 48	249 475 05	200 585 76	42	- 25	2/10
2,030	1,580	200 163 51	200 585 21	200 163 53	200 585 49	200 163 55	200 585 77	42	- 25	10
2,075	1,625	200 164 51	200 585 22	200 164 53	200 585 50	200 164 55	200 585 78	42	- 25	10
2,120	1,670	200 165 51	200 585 23	200 165 53	200 585 51	200 165 55	200 585 79	42	- 25	10
2,150	1,700	200 166 51	200 585 24	200 166 53	200 585 52	200 166 55	200 585 80	43	- 25	10
2,200	1,750	200 167 51	200 585 25	200 167 53	200 585 53	200 167 55	200 585 81	43	- 25	10
2,250	1,800	200 168 51	200 585 26	200 168 53	200 585 54	200 168 55	200 585 82	43	- 25	10
2,300	1,850	200 169 51	200 585 27	200 169 53	200 585 55	200 169 55	200 585 83	43	- 25	10
2,350	1,900	200 170 51	200 585 28	200 170 53	200 585 56	200 170 55	200 585 84	43	- 25	10

SCOPE OF DELIVERY

- Single axle adapter bracket welded onto top hat profile (single axle and tandem adapter bracket)
- Compensation profile for single axle supplied
- Bowden cables loose
- Wheel bolts loose

Separate order for tandem

- Bolt-on tandem adapter bracket 249 236
- Tandem compensation 238 576

SURFACE TREATMENT

- Axle profile hot-dip galvanised
- Wheel brake galvanised

ACCESSORIES

- Shock absorber
  (see table of contents)

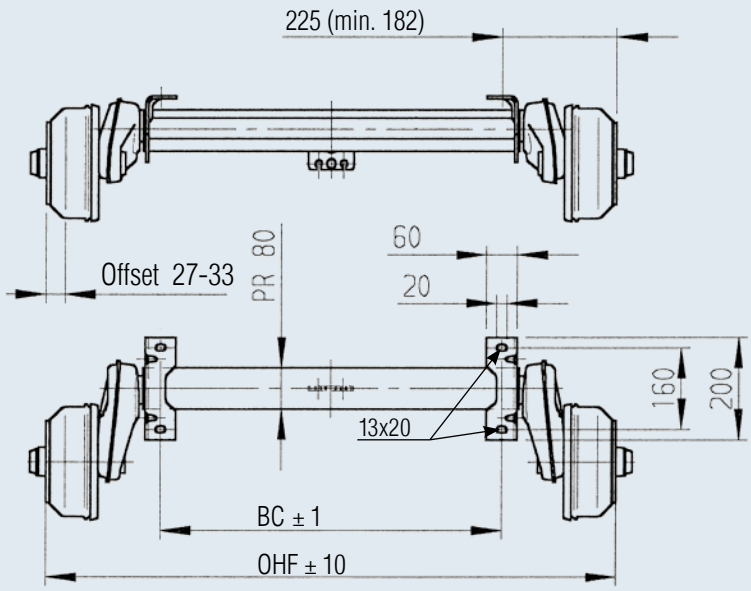

Bowden cable attached at bottom

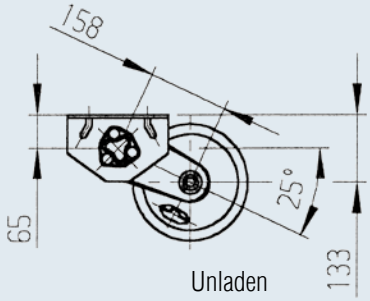

Accessories for bolt-on drawbar connection profiles

Ø 70 / Ø 88.9 / ☐ 60 / ☐ 70 / ☐ 100 — **Part no. 247 853**

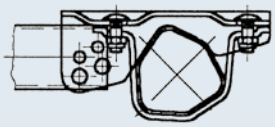

101 VB / 161 VB — **Part no. 249 116**

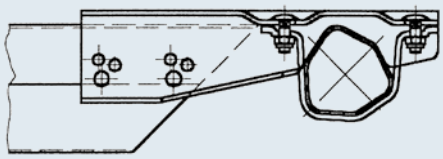

Accessories for tandem

Bolt-on tandem adapter bracket — **Part no. 249 236**

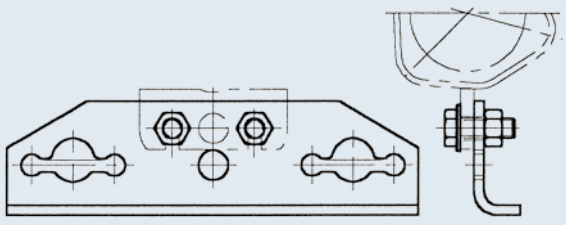

Tandem compensation — **Part no. 238 576**

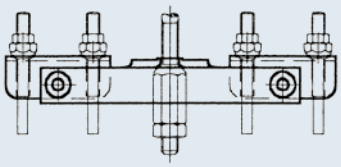

BRAKED AXLE 1,350 KG BASIC

112 x 5

TECHNOLOGY

Model:	BASIC	Wheel brake:	2051	Wheel connection:	112x5
Axle type:	B 1200-6	Suspension:	Hexagonal rubber suspension	Wheel bearing:	Compact bearing
Axle load:	SA 1,350 kg TA 2,700 kg	Swing arm:	161.5 mm	Rim centre hole:	Min. 57 mm



AAA= AL-KO Automatic Adjustment
(automatic adjustment of the brake pads)

SAP: COMP-ACHSE GRM GLL EA1350

OHF in mm	BC in mm	Single axle Axle complete Wheel bolts Ball M 12x1.5 without AAA	Single axle Axle complete Wheel bolts Ball M 12x1.5 with AAA	Tandem front axle Axle complete Wheel bolts Ball M 12x1.5 without AAA	Tandem front axle Axle complete Wheel bolts Ball M 12x1.5 with AAA	Rear axle Axle complete Wheel bolts Ball M 12x1.5 without AAA	Rear axle Axle complete Wheel bolts Ball M 12x1.5 with AAA			
1,200	750	200 001 51	200 586 01	200 001 53	200 586 30	200 001 55	200 586 60	44	- 25	10
1,250	800	200 002 51	200 586 02	200 002 53	200 586 31	200 002 55	200 586 61	44	- 25	10
1,300	850	200 003 51	200 586 03	200 003 53	200 586 32	200 003 55	200 586 62	44	- 25	10
1,350	900	200 004 51	200 586 04	200 004 53	200 586 33	200 004 55	200 586 63	44	- 25	10
1,400	950	200 005 51	200 586 05	200 005 53	200 586 34	200 005 55	200 586 64	44	- 25	10
1,450	1,000	247 547	1 225 996	247 547 03	200 586 35	247 547 05	200 586 65	45	- 25	2/10
1,490	1,040	200 006 51	200 586 06	200 006 53	200 586 36	200 006 55	200 586 66	45	- 25	10
1,520	1,070	200 007 51	200 586 07	200 007 53	200 586 37	200 007 55	200 586 67	45	- 25	10
1,550	1,100	247 548	200 586 08	247 548 03	200 586 38	247 548 05	200 586 68	45	- 25	2/10
1,600	1,150	200 008 51	200 586 09	200 008 53	200 586 39	200 008 55	200 586 69	45	- 25	10
1,650	1,200	247 549	200 586 10	247 549 03	200 586 40	247 549 05	200 586 70	45	- 25	2/10
1,670	1,220	200 009 51	200 586 11	200 009 53	200 586 41	200 009 55	200 586 71	46	- 25	10
1,700	1,250	247 550	200 586 12	247 550 03	200 586 42	247 550 05	200 586 72	46	- 25	2/10
1,750	1,300	200 020 51	200 586 13	200 020 53	200 586 43	200 020 55	200 586 73	46	- 25	2/10
1,760	1,310	200 010 51	200 586 14	200 010 53	200 586 44	200 010 55	200 586 74	46	- 25	10
1,800	1,350	200 011 51	200 586 15	200 011 53	200 586 45	200 011 55	200 586 75	46	- 25	2/10
1,850	1,400	247 551	200 586 16	247 551 03	200 586 46	247 551 05	200 586 76	47	- 25	2/10
1,900	1,450	200 012 51	200 586 17	200 012 53	200 586 47	200 012 55	200 586 77	47	- 25	10
1,950	1,500	247 552	200 586 18	247 552 03	200 586 48	247 552 05	200 586 78	47	- 25	2/10
1,980	1,530	200 013 51	200 586 19	200 013 53	200 586 49	200 013 55	200 586 79	47	- 25	10
2,000	1,550	247 553	200 586 20	247 553 03	200 586 50	247 553 05	200 586 80	49	- 25	2/10
2,030	1,580	200 014 51	200 586 21	200 014 53	200 586 51	200 014 55	200 586 81	49	- 25	10
2,050	1,600	200 021 51	200 586 22	200 021 53	200 586 52	200 021 55	200 586 82	49	- 25	2/10
2,075	1,625	200 015 51	200 586 23	200 015 53	200 586 53	200 015 55	200 586 83	49	- 25	10
2,120	1,670	200 016 51	200 586 24	200 016 53	200 586 54	200 016 55	200 586 84	49	- 25	10
2,150	1,700	247 554	200 586 25	247 554 03	200 586 55	247 554 05	200 586 85	50	- 25	2/10
2,200	1,750	200 017 51	200 586 26	200 017 53	200 586 56	200 017 55	200 586 86	50	- 25	2/10
2,250	1,800	247 555	200 586 27	247 555 03	200 586 57	247 555 05	200 586 87	51	- 25	2/10
2,300	1,850	200 018 51	200 586 28	200 018 53	200 586 58	200 018 55	200 586 88	51	- 25	10
2,350	1,900	200 019 51	200 586 29	200 019 53	200 586 59	200 019 55	200 586 89	51	- 25	2/10

SCOPE OF DELIVERY

- Single axle adapter bracket welded onto top hat profile (single axle and tandem adapter bracket)
- Compensation profile for single axle supplied
- Bowden cables loose
- Wheel bolts loose

Separate order for tandem

- Bolt-on tandem adapter bracket 249 236
- Tandem compensation 238 576

SURFACE TREATMENT

- Axle profile hot-dip galvanised
- Wheel brake galvanised

ACCESSORIES

- Shock absorber
  (see table of contents)

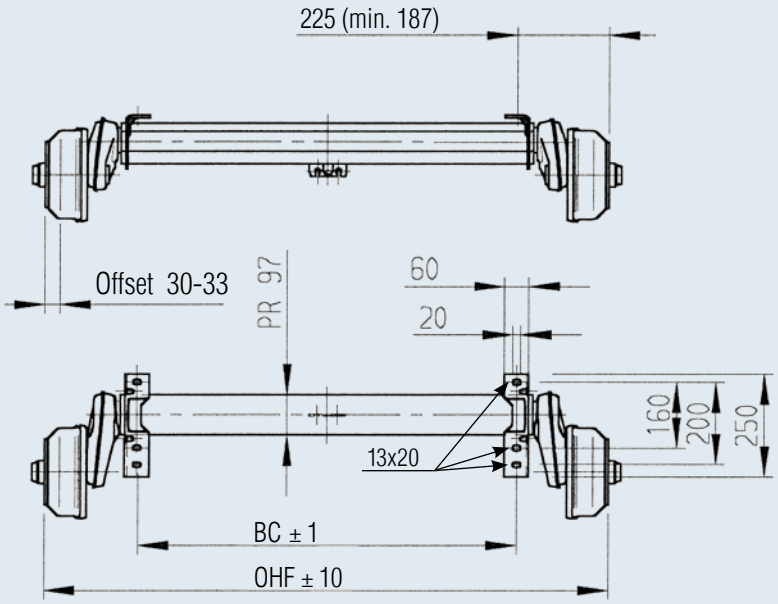

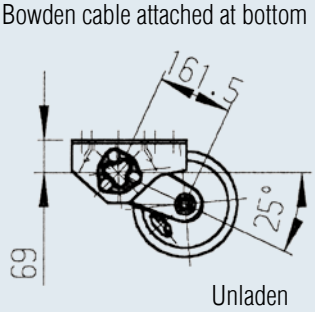

Accessories for bolt-on drawbar connection profiles

Ø 70 / Ø 88.9 / ☐ 70 / ☐ 100 — Part no. 247 684

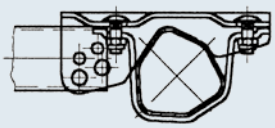

161 VB / 251 VB — Part no. 249 117

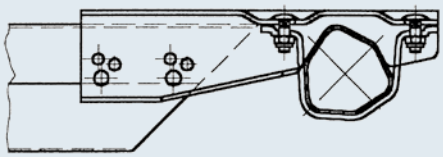

Accessories for tandem

Bolt-on tandem adapter bracket — Part no. 249 236

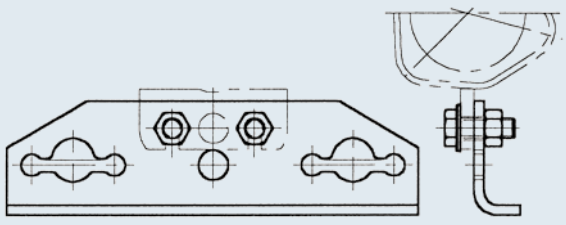

Tandem compensation — Part no. 238 576

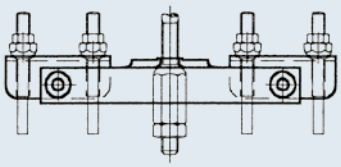

BRAKED AXLE 1,500 KG BASIC

112 x 5

TECHNOLOGY

Model:	BASIC	Wheel brake:	2051	Wheel connection:	112x5
Axle type:	B 1600-3	Suspension:	Hexagonal rubber suspension	Wheel bearing:	Compact bearing
Axle load:	SA 1,500 kg TA 3,000 kg	Swing arm:	161.5 mm	Rim centre hole:	Min. 57 mm



AAA= AL-KO **A**utomatic **A**djustment
(automatic adjustment of the brake pads)

SAP: COMP-ACHSE GRM GLL EA1500

OHF in mm	BC in mm	Single axle Axle complete Wheel bolts Ball M 12x1.5 without AAA	Single axle Axle complete Wheel bolts Ball M 12x1.5 with AAA	Tandem front axle Axle complete Wheel bolts Ball M 12x1.5 without AAA	Tandem front axle Axle complete Wheel bolts Ball M 12x1.5 with AAA	Rear axle Axle complete Wheel bolts Ball M 12x1.5 without AAA	Rear axle Axle complete Wheel bolts Ball M 12x1.5 with AAA			
1,250	800	200 210 51	200 587 01	200 210 53	200 587 29	200 210 55	200 587 58	50	- 25	10
1,300	850	200 211 51	200 587 02	200 211 53	200 587 30	200 211 55	200 587 59	50	- 25	10
1,350	900	200 212 51	200 587 03	200 212 53	200 587 31	200 212 55	200 587 60	50	- 25	10
1,400	950	200 213 51	200 587 04	200 213 53	200 587 32	200 213 55	200 587 61	50	- 25	10
1,450	1,000	247 556	200 587 05	247 556 03	200 587 33	247 556 05	200 587 62	50	- 25	2/10
1,490	1,040	200 214 51	200 587 06	200 214 53	200 587 34	200 214 55	200 587 63	51	- 25	10
1,520	1,070	200 215 51	200 587 07	200 215 53	200 587 35	200 215 55	200 587 64	51	- 25	10
1,550	1,100	247 557	200 587 08	247 557 03	200 587 36	247 557 05	200 587 65	51	- 25	2/10
1,600	1,150	200 216 51	200 587 09	200 216 53	200 587 37	200 216 55	200 587 66	51	- 25	10
1,650	1,200	247 558	200 587 10	247 558 03	200 587 38	247 558 05	200 587 67	53	- 25	2/10
1,670	1,220	200 217 51	200 587 11	200 217 53	200 587 39	200 217 55	200 587 68	53	- 25	10
1,700	1,250	247 559	200 587 12	247 559 03	200 587 40	247 559 05	200 587 69	53	- 25	2/10
1,750	1,300	200 208 51	200 587 13	200 208 53	200 587 41	200 208 55	200 587 70	53	- 25	2/10
1,760	1,310	200 218 51	200 587 14	200 218 53	200 587 42	200 218 55	200 587 71	53	- 25	10
1,800	1,350	200 219 51	200 587 15	200 219 53	200 587 43	200 219 55	200 587 72	54	- 25	10
1,850	1,400	247 560	1 225 995	247 560 03	200 587 44	247 560 05	200 587 73	54	- 25	2/10
1,900	1,450	200 220 51	200 587 16	200 220 53	200 587 45	200 220 55	200 587 74	54	- 25	10
1,950	1,500	247 561	200 587 17	247 561 03	200 587 46	247 561 05	200 587 75	55	- 25	2/10
1,980	1,530	200 221 51	200 587 18	200 221 53	200 587 47	200 221 55	200 587 76	55	- 25	10
2,000	1,550	247 562	200 587 19	247 562 03	200 587 48	247 562 05	200 587 77	55	- 25	2/10
2,030	1,580	200 222 51	200 587 20	200 222 53	200 587 49	200 222 55	200 587 78	55	- 25	10
2,050	1,600	200 209 51	200 587 21	200 209 53	200 587 50	200 209 55	200 587 79	56	- 25	2/10
2,075	1,625	200 223 51	200 587 22	200 223 53	200 587 51	200 223 55	200 587 80	56	- 25	10
2,120	1,670	200 224 51	200 587 23	200 224 53	200 587 52	200 224 55	200 587 81	56	- 25	10
2,150	1,700	247 563	200 587 24	247 563 03	200 587 53	247 563 05	200 587 82	57	- 25	2/10
2,200	1,750	200 225 51	200 587 25	200 225 53	200 587 54	200 225 55	200 587 83	57	- 25	10
2,250	1,800	200 226 51	200 587 26	200 226 53	200 587 55	200 226 55	200 587 84	57	- 25	10
2,300	1,850	200 227 51	200 587 27	200 227 53	200 587 56	200 227 55	200 587 85	58	- 25	10
2,350	1,900	200 228 51	200 587 28	200 228 53	200 587 57	200 228 55	200 587 86	58	- 25	2/10

SCOPE OF DELIVERY

- Single axle adapter bracket welded onto top hat profile (single axle and tandem adapter bracket)
- Compensation profile for single axle supplied
- Bowden cables loose
- Wheel bolts loose

Separate order for tandem

- Bolt-on tandem adapter bracket 249 236
- Tandem compensation 238 576

SURFACE TREATMENT

- Axle profile hot-dip galvanised
- Wheel brake galvanised

ACCESSORIES

- Shock absorber
  (see table of contents)

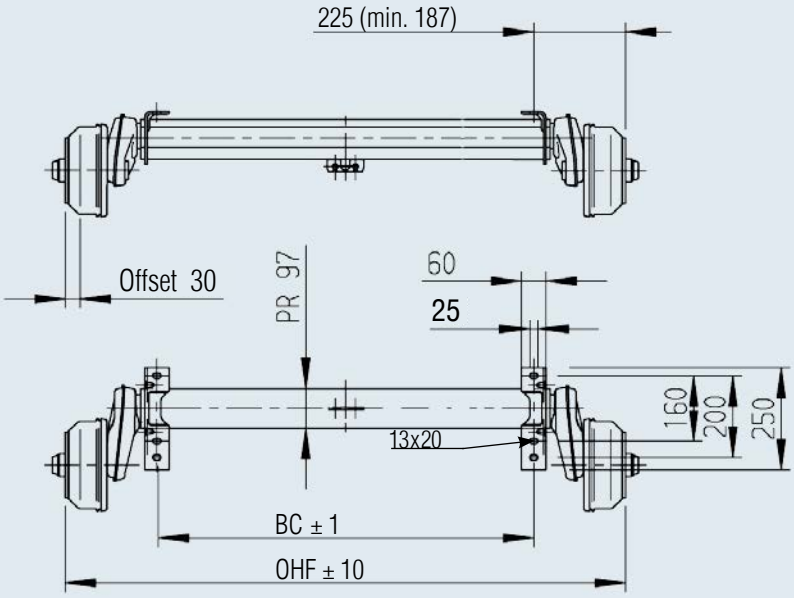

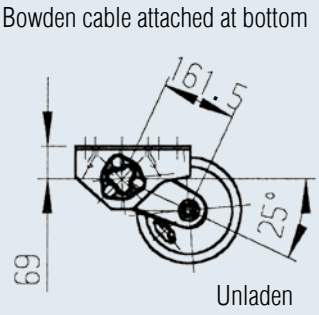

Accessories for bolt-on drawbar connection profiles

Ø 70 / Ø 88.9 / ☐ 70 / ☐ 100 — **Part no. 247 684**

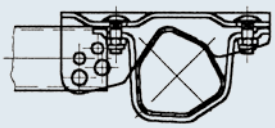

161 VB / 251 VB — **Part no. 249 117**

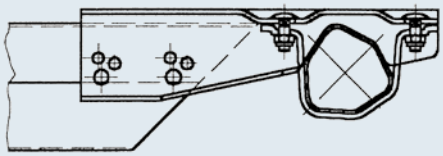

Accessories for tandem

Bolt-on tandem adapter bracket — **Part no. 249 236**

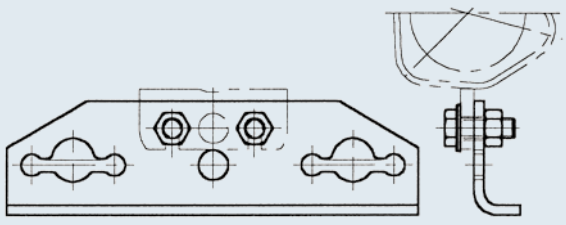

Tandem compensation — **Part no. 238 576**

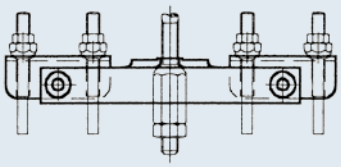

BRAKED AXLE 1,600 KG BASIC

112 x 5

TECHNOLOGY

Model:	BASIC	Wheel brake:	2361	Wheel connection:	112x5
Axle type:	B 1600-1	Suspension:	Hexagonal rubber suspension	Wheel bearing:	Compact bearing
Axle load:	SA 1,600 kg TA 3,200 kg	Swing arm:	160 mm	Rim centre hole:	Min. 63 mm



AAA= AL-KO **A**utomatic **A**djustment
(automatic adjustment of the brake pads)

SAP: EURO1ACHSE GRM GLL EA1600

OHF in mm	BC in mm	Single axle Axle complete Wheel bolts Ball M 12x1.5 without AAA	Single axle Axle complete Wheel bolts Ball M 12x1.5 with AAA	Tandem front axle Axle complete Wheel bolts Ball M 12x1.5 without AAA	Tandem front axle Axle complete Wheel bolts Ball M 12x1.5 with AAA	Rear axle Axle complete Wheel bolts Ball M 12x1.5 without AAA	Rear axle Axle complete Wheel bolts Ball M 12x1.5 with AAA			
1,320	850	200 019 01	200 601 01	200 019 03	200 601 26	200 019 05	200 601 51	68	- 20	10
1,370	900	200 020 01	200 601 02	200 020 03	200 601 27	200 020 05	200 601 52	68	- 20	10
1,420	950	200 021 01	200 601 03	200 021 03	200 601 28	200 021 05	200 601 53	68	- 20	10
1,470	1,000	244 049	200 601 04	244 049 03	200 601 29	244 049 05	200 601 54	69	- 20	2/10
1,510	1,040	200 022 01	200 601 05	200 022 03	200 601 30	200 022 05	200 601 55	69	- 20	10
1,540	1,070	200 023 01	200 601 06	200 023 03	200 601 31	200 023 05	200 601 56	69	- 20	10
1,570	1,100	244 050	200 601 07	244 050 03	200 601 32	244 050 05	200 601 57	71	- 20	2/10
1,620	1,150	200 024 01	200 601 08	200 024 03	200 601 33	200 024 05	200 601 58	71	- 20	10
1,670	1,200	244 051	200 601 09	244 051 03	200 601 34	244 051 05	200 601 59	72	- 20	2/10
1,690	1,220	200 025 01	200 601 10	200 025 03	200 601 35	200 025 05	200 601 60	72	- 20	10
1,720	1,250	244 052	200 601 11	244 052 03	200 601 36	244 052 05	200 601 61	73	- 20	2/10
1,780	1,310	200 026 01	200 601 12	200 026 03	200 601 37	200 026 05	200 601 62	73	- 20	10
1,820	1,350	200 027 01	200 601 13	200 027 03	200 601 38	200 027 05	200 601 63	73	- 20	10
1,870	1,400	244 053	200 601 14	244 053 03	200 601 39	244 053 05	200 601 64	74	- 20	2/10
1,920	1,450	200 028 01	200 601 15	200 028 03	200 601 40	200 028 05	200 601 65	74	- 20	10
1,970	1,500	244 054	200 601 16	244 054 03	200 601 41	244 054 05	200 601 66	75	- 20	2/10
2,000	1,530	200 029 01	200 601 17	200 029 03	200 601 42	200 029 05	200 601 67	75	- 20	10
2,020	1,550	244 055	200 601 18	244 055 03	200 601 43	244 055 05	200 601 68	75	- 20	2/10
2,050	1,580	200 030 01	200 601 19	200 030 03	200 601 44	200 030 05	200 601 69	75	- 20	10
2,095	1,625	200 031 01	200 601 20	200 031 03	200 601 45	200 031 05	200 601 70	75	- 20	10
2,140	1,670	200 032 01	200 601 21	200 032 03	200 601 46	200 032 05	200 601 71	75	- 20	10
2,170	1,700	244 056	200 601 22	244 056 03	200 601 47	244 056 05	200 601 72	76	- 20	2/10
2,220	1,750	200 033 01	200 601 23	200 033 03	200 601 48	200 033 05	200 601 73	76	- 20	10
2,270	1,800	200 034 01	200 601 24	200 034 03	200 601 49	200 034 05	200 601 74	76	- 20	10
2,320	1,850	200 035 01	200 601 25	200 035 03	200 601 50	200 035 05	200 601 75	76	- 20	10

SCOPE OF DELIVERY

- Single axle adapter bracket welded onto top hat profile (single axle and tandem adapter bracket)
- Compensation profile for single axle supplied
- Bowden cables loose
- Wheel bolts loose

Separate order for tandem

- Bolt-on tandem adapter bracket 249 236
- Tandem compensation 238 576

SURFACE TREATMENT

- Axle profile hot-dip galvanised
- Wheel brake galvanised

ACCESSORIES

- Shock absorber
  (see table of contents)

4

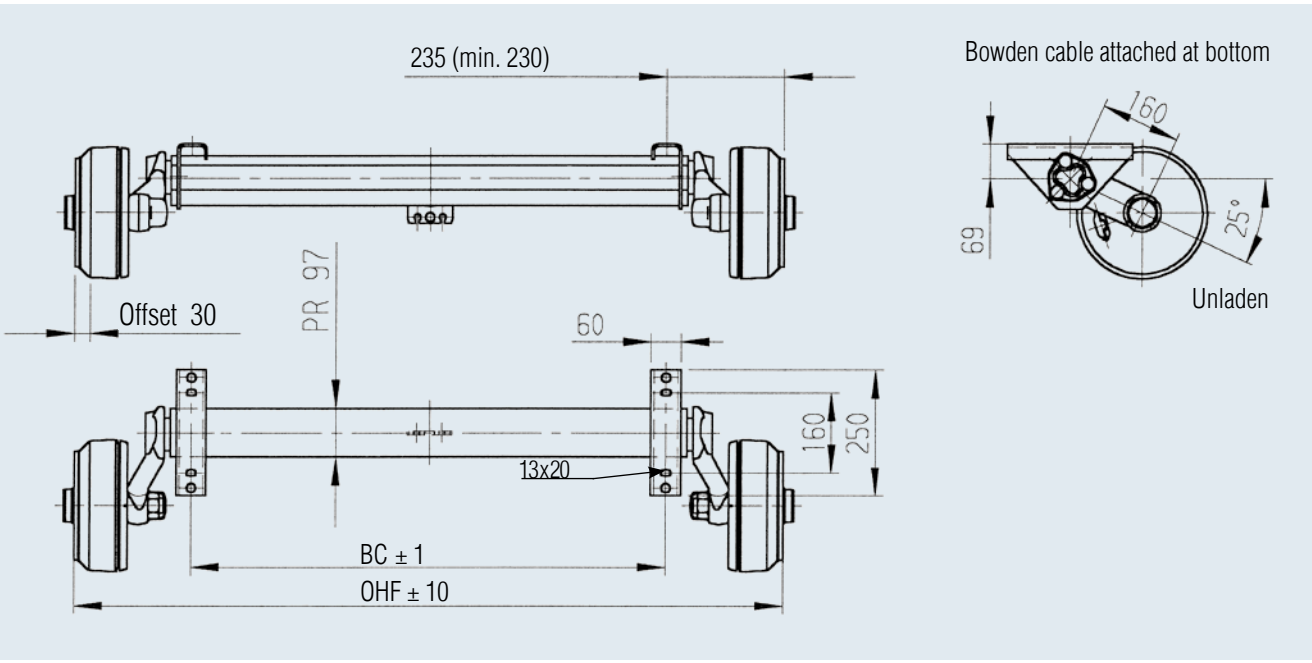

Accessories for bolt-on drawbar connection profiles

Ø 70 / Ø 88.9 / ☐ 70 / ☐ 100 — **Part no. 247 684**

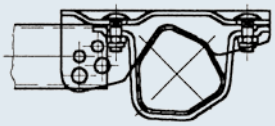

161 VB / 251 VB — **Part no. 249 117**

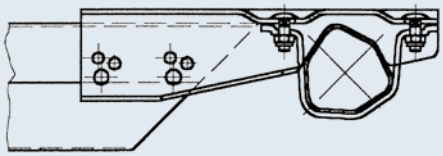

Accessories for tandem

Bolt-on tandem adapter bracket — **Part no. 249 236**

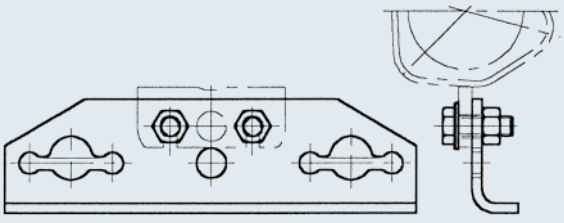

Tandem compensation — **Part no. 238 576**

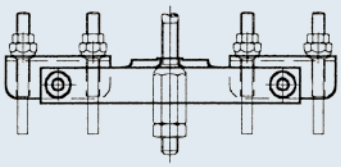

AXLE BRAKED 1,800 KG BASIC

APPLICATION AREAS / BENEFIT / OPTIONS

SUSPENSION

Proven maintenance-free
hexagonal rubber suspension

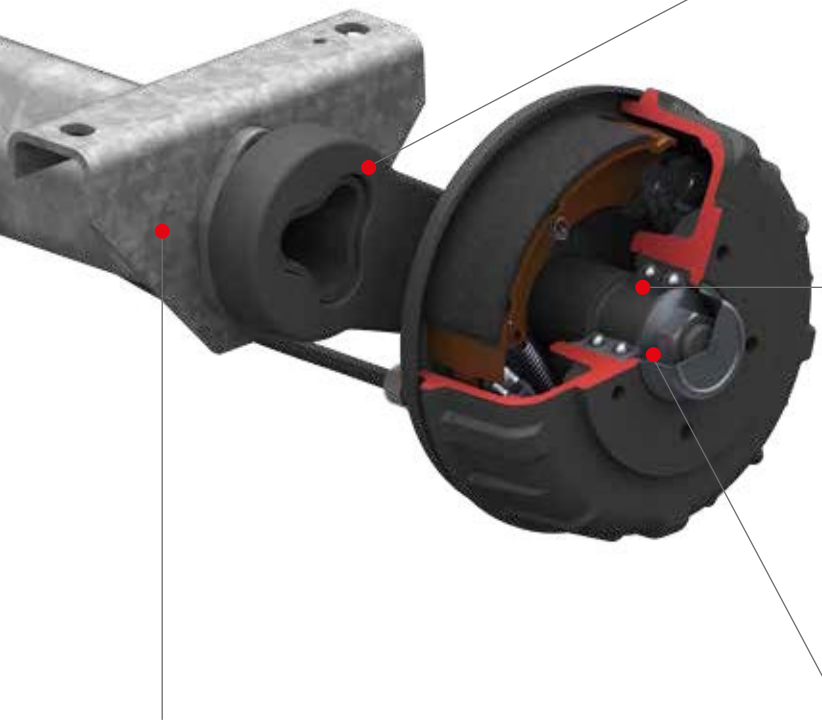

FORGED SWING ARM

Axle stubs and brake back plate are welded with the swing arm.

BEARINGS

Proven maintenance-free double radial angled ball bearings (compact bearings).

SURFACE TREATMENT

Axle profile hot-dip galvanised and additionally passivated. Inner tube, swing arm black primed, wheel brake cataphoretically coated.

AXLE STUB/BEARING/HUB SCREW CONNECTION

The brake drum with bearings pressed in is secured with a self-tapping M 27 nut.

HUB VARIANTS AND POSSIBLE WHEEL CONNECTIONS

	Offset from - to mm	Possible wheel connections					
		112x5	120x5	130x5	140x5	130x4	139.7x4
Type 2361 wheel brake	Offset 20 – 30	x	x	x	x	x	x

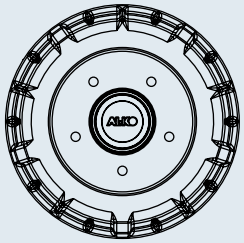

The following options can be offered for a surcharge.

1. AXLE BRACKETS

Our standard axle brackets can be found on the next pages. Special axle brackets are available for a minimum annual quantity of 250 axles.
Please let us know details about your body structure so that we can select the right version for you.



2. SHOCK ABSORBER BRACKET

A shock absorber bracket can be welded on if required.



3. SWING ARM POSITION

In addition to our standard swing arm position of 25° we optionally also offer 5°.

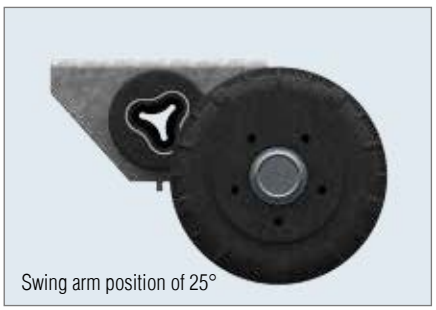

Swing arm position of 25°

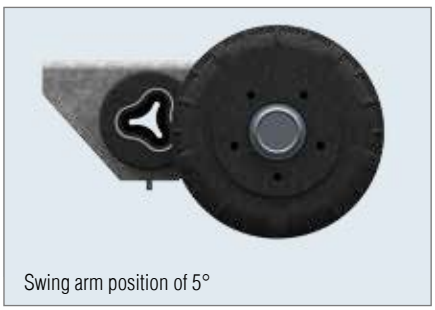

Swing arm position of 5°

BRAKED AXLE 1,800 KG BASIC

112 x 5

TECHNOLOGY

Model:	BASIC	Wheel brake:	2361	Wheel connection:	112x5
Axle type:	B 1800-9	Suspension:	Hexagonal rubber suspension	Wheel bearing:	Compact bearing
Axle load:	SA 1,800 kg TA 1,750 kg (3,500 kg)	Swing arm:	160 mm	Rim centre hole:	Min. 63 mm



AAA= AL-KO **A**utomatic **A**djustment
(automatic adjustment of the brake pads)

Minimum order quantity per date and item number is 20 units.

SAP: ACHSE GU LNGS GRM EA1800 BASIC

OHF in mm	BC in mm	❶ Single axle Axle complete Wheel bolts Ball M 12x1.5 without AAA	❶ with AAA*	❷ Tandem front axle Axle complete Wheel bolts Ball M 12x1.5 without AAA	❷ with AAA*	❸ Rear axle Axle complete Wheel bolts Ball M 12x1.5 without AAA	❸ with AAA*	Select rear axle from column ❸ Single and tandem axle Front axle with top hat profile and fixing bolts Wheel bolts Ball M 12x1.5 without AAA	with AAA*			
1,370	900	200 640 01	200 640 20	200 640 40	200 640 60	200 640 80	200 641 00	200 641 20	200 641 40	73.9	- 20	25
1,420	950	200 640 02	200 640 21	200 640 41	200 640 61	200 640 81	200 641 01	200 641 21	200 641 41	74.4	- 20	25
1,470	1,000	1 701 879	200 640 22	200 640 42	200 640 62	200 640 82	200 641 02	200 641 22	200 641 42	74.9	- 20	25
1,520	1,050	200 640 03	200 640 23	200640 43	200 640 63	200 640 83	200 641 03	200 641 23	200 641 43	75.4	- 20	25
1,570	1,100	200 640 04	200 640 24	200640 44	200 640 64	200 640 84	200 641 04	200 641 24	200 641 44	75.9	- 20	25
1,620	1,150	200 640 05	200 640 25	200 640 45	200 640 65	200 640 85	200 641 05	200 641 25	200 641 45	76.4	- 20	25
1,670	1,200	200 640 06	200 640 26	200 640 46	200 640 66	200 640 86	200 641 06	200 641 26	200 641 46	76.9	- 20	25
1,720	1,250	200 640 07	200 640 27	200 640 47	200 640 67	200 640 87	200 641 07	200 641 27	200 641 47	77.4	- 20	25
1,770	1,300	200 640 08	200 64028	200 640 48	200 640 68	200 640 88	200 641 08	200 641 28	200 641 48	77.9	- 20	25
1,820	1,350	200 640 09	200 640 29	200 640 49	200 640 69	200 640 89	200 641 09	200 641 29	200 641 49	78.4	- 20	25
1,870	1,400	200 640 10	200 640 30	200 640 50	200 640 70	200 640 90	200 641 10	200 641 30	200 641 50	78.9	- 20	25
1,920	1,450	200 640 11	200 640 31	200 640 51	200 640 71	200 640 91	200 641 11	200 641 31	200 641 51	79.4	- 20	25
1,970	1,500	200 640 12	200 640 32	200 640 52	200 640 72	200 640 92	200 641 12	200 641 32	200 641 52	79.9	- 20	25
2,020	1,550	200 640 13	200 640 33	200 640 53	200 640 73	200 640 93	200 641 13	200 641 33	200 641 53	80.4	- 20	25
2,070	1,600	200 640 14	200 640 34	200 640 54	200 640 74	200 640 94	200 641 14	200 641 34	200 641 54	80.9	- 20	25
2,120	1,650	200 640 15	200 640 35	200 640 55	200 640 75	200 640 95	200 641 15	200 641 35	200 641 55	81.4	- 20	25
2,170	1,700	200 640 16	200 640 36	200 640 56	200 640 76	200 640 96	200 641 16	200 641 36	200 641 56	81.9	- 20	25
2,220	1,750	200 640 17	200 640 37	200 640 57	200 640 77	200 640 97	200 641 17	200 641 37	200 641 57	82.4	- 20	25
2,270	1,800	200 640 18	200 640 38	200 640 58	200 640 78	200 640 98	200 641 18	200 641 38	200 641 58	82.9	- 20	25
2,320	1,850	200 640 19	200 640 39	200 640 59	200 640 79	200 640 99	200 641 19	200 641 39	200 641 59	83.4	- 20	25

SCOPE OF DELIVERY

- Single axle adapter bracket welded on (single axle and tandem adapter bracket)
- Compensation profile for single axle supplied
- Bowden cables loose
- Wheel bolts loose

Separate order for tandem

- Bolt-on tandem adapter bracket 249 236
- Tandem compensation 238 576

SURFACE TREATMENT

- Axle profile hot-dip galvanised
- Wheel brake cataphoretically coated

ACCESSORIES

- Shock absorber
  (see table of contents)

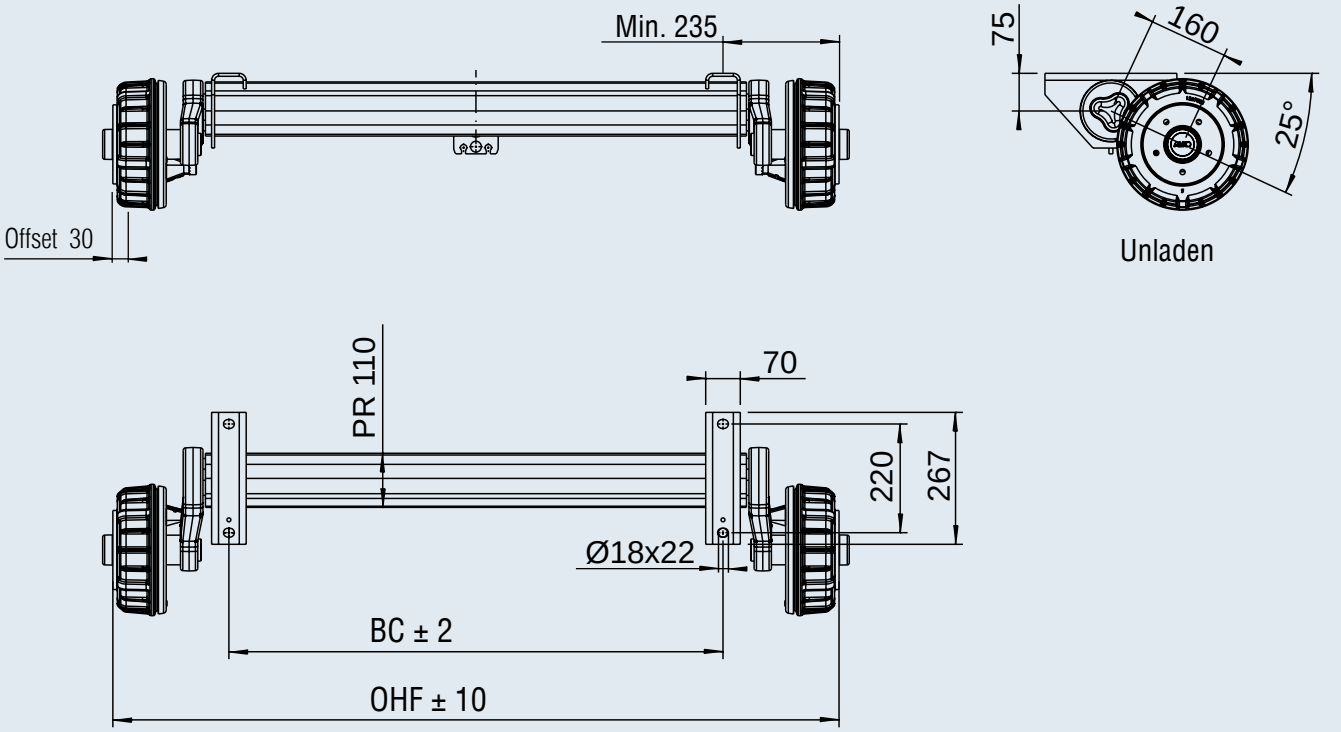

Accessories for top hat profile incl. adapter bracket for single axle and tandem

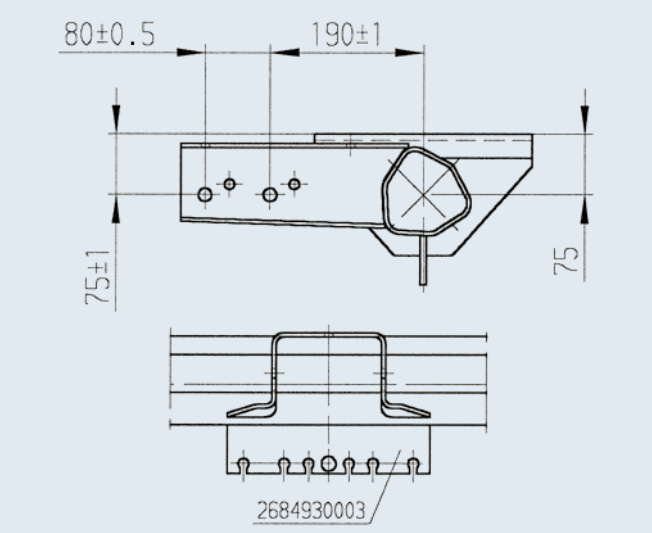

Accessories for tandem

Bolt-on tandem adapter bracket — **Part no. 249 236**

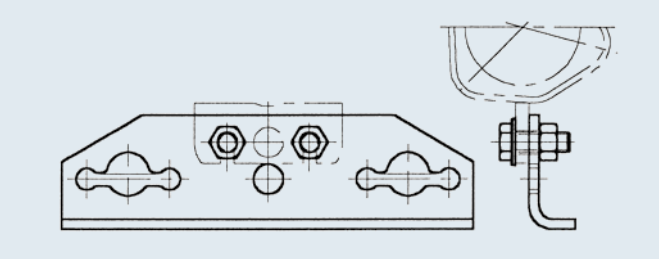

Tandem compensation — **Part no. 238 576**

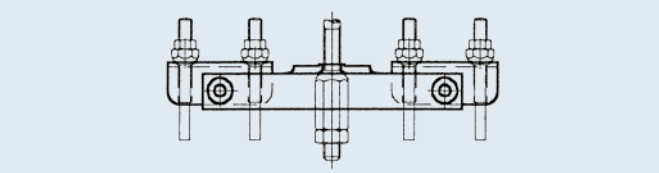

BRAKED AXLE 3,500 KG BASIC

205 x 6

TECHNOLOGY

Model:	BASIC		
Axle type:	B 3500-2	Swing arm:	150 mm
Axle load:	SA 3,500 kg	Wheel connection:	205x6
Wheel brake:	3081B	Wheel bearing:	Tapered roller bearing
Suspension:	Hexagonal rubber suspension	Rim centre hole:	Min. 161 mm



SAP: ACHSE GU LNGS GRM EA3500

B 3500-2		**Single axle** **Wheel nuts M 18x1.5** **Ball** **Wheel brake** **3081 B**	**Front axle** **with top hat profile and fixing bolts** **Wheel brake** **3081 B**		
OHF in mm	**BC in mm**	**Axle cpl.**	**Axle cpl.**	**Single axle kg**	
1,780	1,300	1 223 408	1 223 411	140	20
1,980	1,500	1 223 409	1 223 412	143	20
2,180	1,700	1 223 410	1 223 413	146	20

SCOPE OF DELIVERY

- Single axle adapter bracket welded on
- Compensation profile
- Bowden cable loose
- Wheel nuts mounted

SURFACE TREATMENT

- Axle profile hot-dip galvanised
- Wheel brake 3081B dip primed black

ACCESSORIES

- Shock absorber
  (see table of contents)

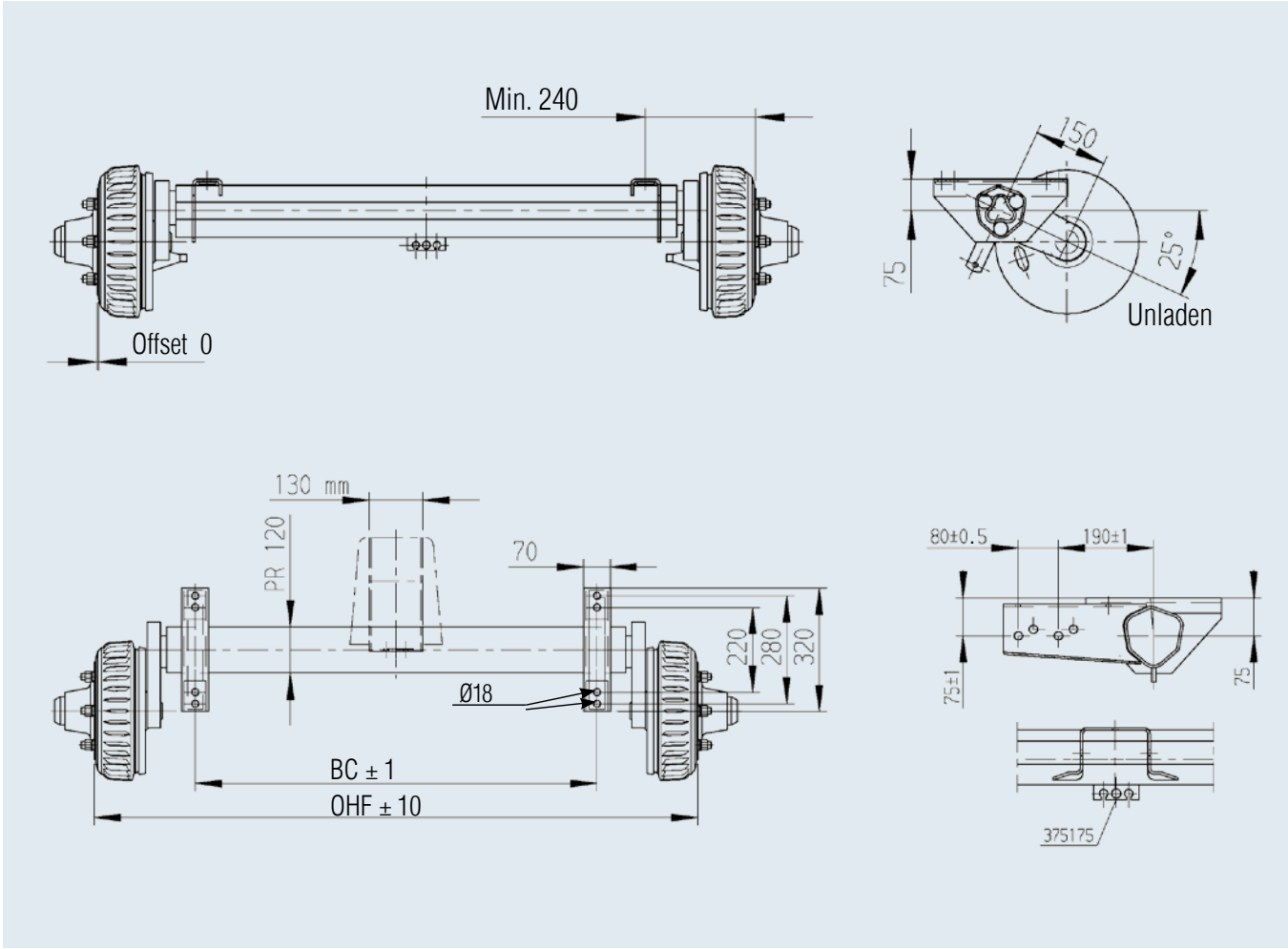

AL-KO PLUS BRAKED AXLES

Product differentiation

PLUS BRAKED AXLES – VARIANTS / DETAILS

PLUS braked axles "details"	1,350 kg	1,500 kg	1,800 kg	1,800 kg
Gross weight kg, single axle	1,350	1,500	1,800	1,800
Gross weight kg, tandem axle	2,700	3,000	3,500	3,500
Suitable for	Trailers of all types	Trailers of all types	Trailers of all types	Trailers of all types
Type of suspension	Hexagonal rubber suspension	Leaf suspension	Hexagonal rubber suspension	Leaf suspension
Swing arm design	Hollow		Forged	
Swing arm length (mm)	175		175	
Suspension comfort set-up	←	**Above average (finer, more comfortable)**		→
Axle profile, diameter	Hexagonal, 97 mm	Square, 60 mm	Hexagonal, 110 mm	Square, 70 mm
Suspension maintenance	No, maintenance-free	No, maintenance-free	No, maintenance-free	No, maintenance-free
Wheel brake type	2051	2051	2361	2361
Wheel bearing design	Compact bearing	Compact bearing	Compact bearing	Compact bearing
Bearing maintenance required?	No, maintenance-free	No, maintenance-free	No, maintenance-free	No, maintenance-free
Brake drum with cooling ribs	Yes	Yes	Yes	Yes
Independent wheel suspension	Yes	No	Yes	No
Wheel arch damage possible with extreme overload?	No	Yes	No	Yes
Better heat dissipation through brake drums with cooling ribs	Yes	Yes	Yes	Yes
Axle stub connection to swing arm	Bolted	Bolted	Bolted	Bolted
Toe-in adjustment for minimal tyre wear possible?	Yes	No	Yes	No
Brake pads free of asbestos, corrosion-resistant, without iron content	Yes	Yes	Yes	Yes
Options / surcharge				
Watertight bearing available	Yes	Yes	Yes	Yes
Automatic brake adjustment AAA available	Yes	Yes	Yes	Yes
Shock absorber bracket fastening	Plug-in	bolted	welded	bolted



2,500 kg	3,000 kg	3,000 kg	3,500 kg	4,000 kg
2,500	3,000	3,000	3,500	4,000
3,500	3,500	3,500	3,500	3,500
Trailers of all types	Trailers of all types	Trailers of all types	Trailers of all types	Trailers of all types
Hexagonal rubber suspension	Hexagonal rubber suspension	Steel torsion bar suspension	Steel torsion bar suspension	Steel torsion bar suspension
Forged	Forged	Forged	Forged	Forged
200	175	200	200	200
← **Above average (finer, more comfortable)** →				
Hexagonal, 120 mm	Hexagonal, 120 mm	Hexagonal, 114 mm	Round, Ø 114	Round, Ø 114
No, maintenance-free	No, maintenance-free	Yes	Yes	Yes
3062	3062	3062	3081 B	3081 B
Tapered roller bearing	Tapered roller bearing	Tapered roller bearing	Tapered roller bearing	Tapered roller bearing
Yes	Yes	Yes	Yes	Yes
No	No	No	No	No
Yes	Yes	Yes	Yes	Yes
No	No	No	No	No
No	No	No	No	No
Welded	Welded	Welded	Welded	Welded
No	No	No	No	No
Yes	Yes	Yes	Yes	Yes

No	No	No	Yes, as standard from July 2016	Yes, as standard from July 2016
No	No	No	No	No
welded	welded	welded	welded	welded

BRAKED AXLE 1,350 KG PLUS

112 x 5, softer suspension, reinforced bearings

TECHNOLOGY

Model:	PLUS	Wheel brake:	2051	Wheel connection:	112x5
Axle type:	B 1200-6	Suspension:	Hexagonal rubber suspension	Wheel bearing:	Reinforced compact bearing
Axle load:	SA 1,350 kg TA 2,700 kg	Swing arm:	175 mm	Rim centre hole:	Min. 57 mm

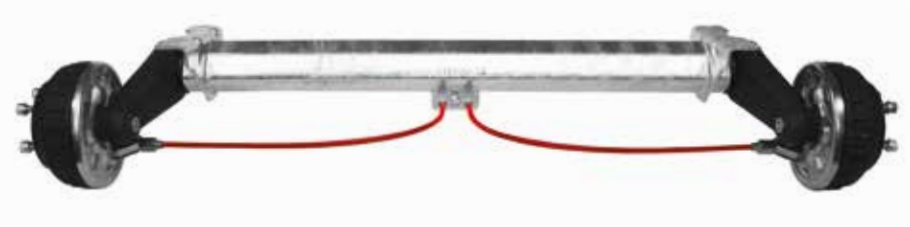

AAA= AL-KO **A**utomatic **A**djustment
(automatic adjustment of the brake pads)

SAP: EURO1ACHSE GRM GLL EA1350

OHF in mm	BC in mm	Single axle Axle complete Wheel bolts Ball M 12x1.5 without AAA	Single axle Axle complete Wheel bolts Ball M 12x1.5 with AAA	Tandem front axle Axle complete Wheel bolts Ball M 12x1.5 without AAA	Tandem front axle Axle complete Wheel bolts Ball M 12x1.5 with AAA	Rear axle Axle complete Wheel bolts Ball M 12x1.5 without AAA	Rear axle Axle complete Wheel bolts Ball M 12x1.5 with AAA			
1,250	800	200 016 01	200 589 01	200 016 03	200 589 27	200 016 05	200 589 53	49	- 25	10
1,300	850	200 017 01	200 589 02	200 017 03	200 589 28	200 017 05	200 589 54	49	- 25	10
1,350	900	200 001 01	200 589 03	200 001 03	200 589 29	200 001 05	200 589 55	49	- 25	10
1,400	950	200 002 01	200 589 04	200 002 03	200 589 30	200 002 05	200 589 56	49	- 25	10
1,450	1,000	244 038	200 589 05	244 038 03	200 589 31	244 038 05	200 589 57	50	- 25	10
1,490	1,040	200 003 01	200 589 06	200 003 03	200 589 32	200 003 05	200 589 58	50	- 25	10
1,520	1,070	200 004 01	200 589 07	200 004 03	200 589 33	200 004 05	200 589 59	50	- 25	10
1,550	1,100	244 039	200 589 08	244 039 03	200 589 34	244 039 05	200 589 60	51	- 25	10
1,600	1,150	200 005 01	200 589 09	200 005 03	200 589 35	200 005 05	200 589 61	51	- 25	10
1,650	1,200	244 040	200 589 10	244 040 03	200 589 36	244 040 05	200 589 62	52	- 25	10
1,670	1,220	200 006 01	200 589 11	200 006 03	200 589 37	200 006 05	200 589 63	52	- 25	10
1,700	1,250	244 041	200 589 12	244 041 03	200 589 38	244 041 05	200 589 64	53	- 25	10
1,760	1,310	200 007 01	200 589 13	200 007 03	200 589 39	200 007 05	200 589 65	53	- 25	10
1,800	1,350	200 008 01	200 589 14	200 008 03	200 589 40	200 008 05	200 589 66	53	- 25	10
1,850	1,400	244 042	200 589 15	244 042 03	200 589 41	244 042 05	200 589 67	53	- 25	10
1,900	1,450	200 009 01	200 589 16	200 009 03	200 589 42	200 009 05	200 589 68	54	- 25	10
1,950	1,500	244 043	200 589 17	244 043 03	200 589 43	244 043 05	200 589 69	54	- 25	10
1,980	1,530	200 010 01	200 589 18	200 010 03	200 589 44	200 010 05	200 589 70	54	- 25	10
2,000	1,550	244 044	200 589 19	244 044 03	200 589 45	244 044 05	200 589 71	55	- 25	10
2,030	1,580	200 011 01	200 589 20	200 011 03	200 589 46	200 011 05	200 589 72	55	- 25	10
2,075	1,625	200 012 01	200 589 21	200 012 03	200 589 47	200 012 05	200 589 73	55	- 25	10
2,120	1,670	200 013 01	200 589 22	200 013 03	200 589 48	200 013 05	200 589 74	55	- 25	10
2,150	1,700	244 045	200 589 23	244 045 03	200 589 49	244 045 05	200 589 75	56	- 25	10
2,200	1,750	200 014 01	200 589 24	200 014 03	200 589 50	200 014 05	200 589 76	56	- 25	10
2,250	1,800	244 046	200 589 25	244 046 03	200 589 51	244 046 05	200 589 77	57	- 25	10
2,300	1,850	200 015 01	200 589 26	200 015 03	200 589 52	200 015 05	200 589 78	57	- 25	10

SCOPE OF DELIVERY

- Single axle adapter bracket welded on (single axle and tandem adapter bracket)
- Compensation profile for single axle supplied
- Bowden cables loose
- Wheel bolts loose

Separate order for tandem

- Bolt-on tandem adapter bracket 249 236
- Tandem compensation 238 576

SURFACE TREATMENT

- Axle profile hot-dip galvanised
- Wheel brake galvanised

ACCESSORIES

- Shock absorber
  (see table of contents)

4

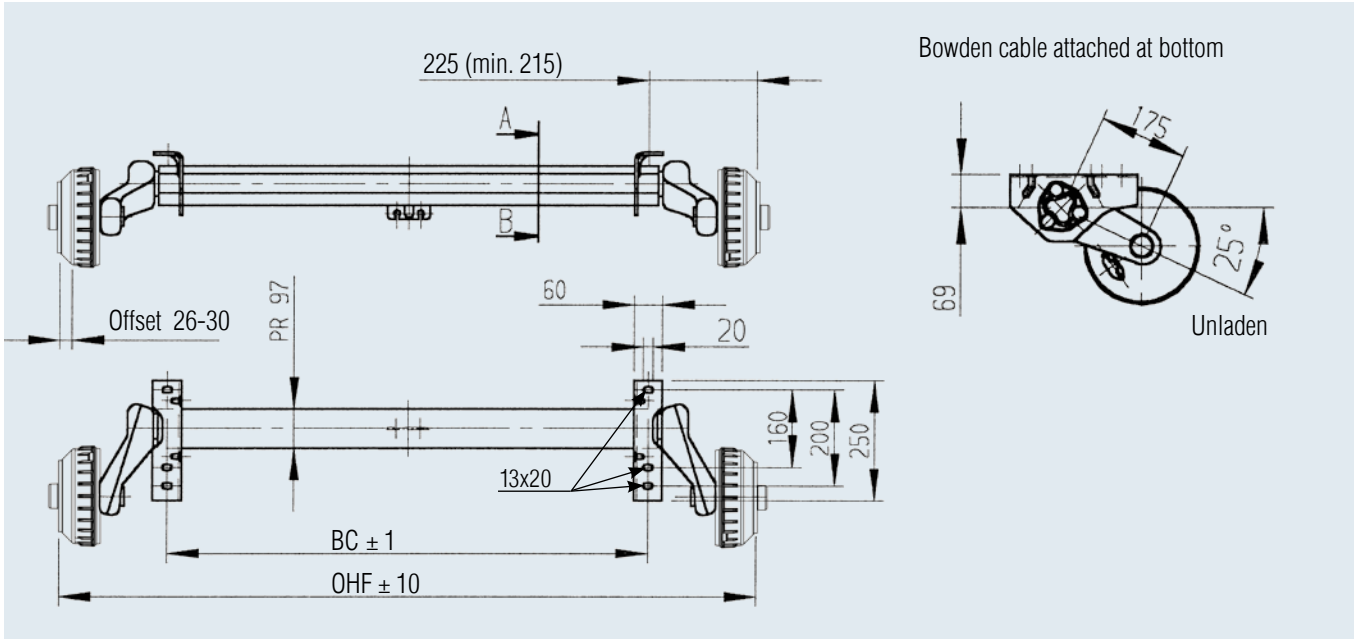

Accessories for bolt-on drawbar connection profiles

Ø 70 / Ø 88.9 / ⍁ 70 / ⍁ 100 — **Part no. 247 684**

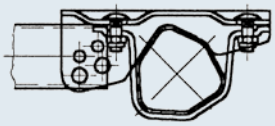

161 VB / 251 VB — **Part no. 249 117**

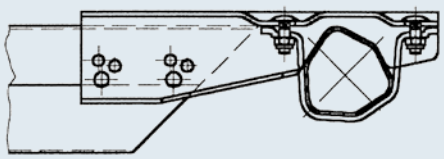

Accessories for tandem

Bolt-on tandem adapter bracket — **Part no. 249 236**

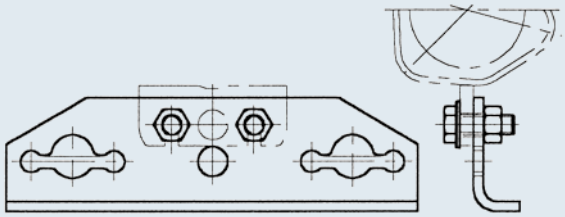

Tandem compensation — **Part no. 238 576**

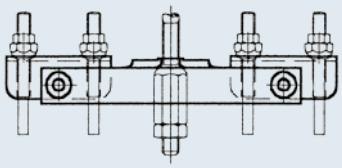

RIGID BRAKED AXLE 1,500/1,800 KG PLUS

with leaf suspension

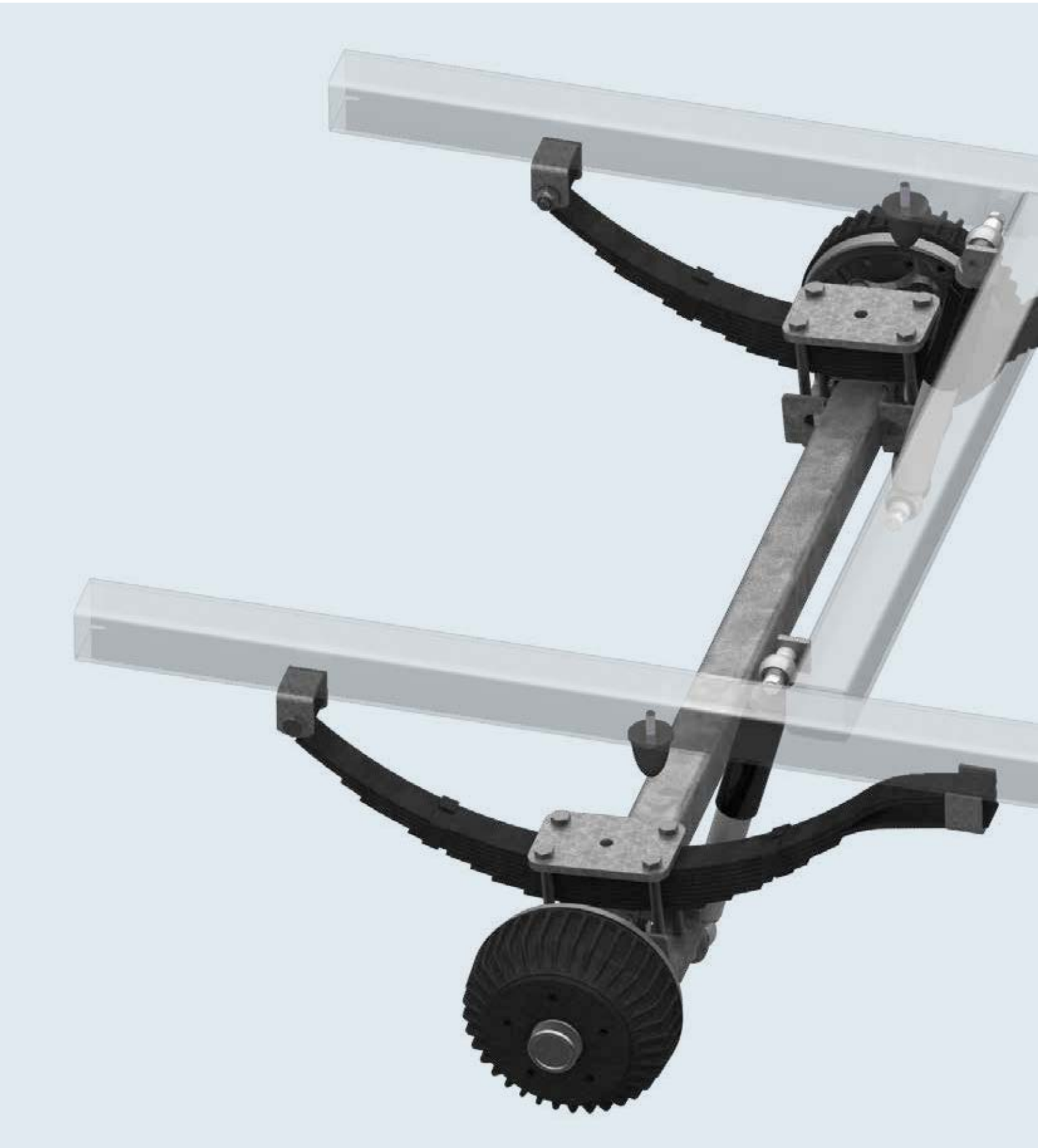



YOUR ADVANTAGE

- Modular system, i.e. you can choose between:
  A) Axle complete (supplied unmounted)
  B) Individual axle components

- The leaf springs and shock absorbers are clamped onto the axle profile

- Wheel brake with stub either:
  A) For screwing in = AL-KO concept
  (simple to exchange during service)
  B) Or for welding in = produced by customer

- The axle tube is a sturdy, commercially available square tube

- Thanks to the screw-in system, the axle tube and fastening plates can be hot-dip galvanised

- Wheel brake as standard with compact bearing

- Wheel brake optionally in watertight version

RIGID BRAKED AXLE 1,500 KG PLUS

112 x 5

TECHNOLOGY

Model:	PLUS
Axle type:	BS 1500
Axle load:	SA 1,500 kg
Wheel connection:	112x5 – M12x1.5

SURFACE TREATMENT

- Axle profile hot-dip galvanised

ACCESSORIES

- See following pages



SAP: ACHSE -- STARR GRM EA1500

Single axle with wheel connection 112x5 RIGID GBR PLUS BS 1500			Tandem axle Front axle	Rear axle	Single axle with wheel connection 112x5 watertight RIGID GBR PLUS BS 1500 WD				
OHF in mm	BC in mm	Wheel bolts Ball M 12x1.5 Axle cpl.	Wheel bolts Ball M 12x1.5 Axle cpl.	Wheel bolts Ball M 12x1.5 Axle cpl.	Wheel bolts Ball M 12x1.5 Axle cpl.				
1,150	700	200 581 01	200 581 25	200 581 50	200 582 01	38	-	50	15
1,200	750	200 581 02	200 581 26	200 581 51	200 582 02	38.5	-	50	15
1,250	800	200 581 03	200 581 27	200 581 52	200 582 03	38.9	-	50	15
1,300	850	200 581 04	200 581 28	200 581 53	200 582 04	39.3	-	50	15
1,350	900	200 581 05	200 581 29	200 581 54	200 582 05	39.7	-	50	15
1,400	950	200 581 06	200 581 30	200 581 55	200 582 06	40.2	-	50	15
1,450	1,000	1 421 796	200 581 31	200 581 56	200 582 07	40.6	-	50	15
1,500	1,050	200 581 07	200 581 32	200 581 57	200 582 08	41	-	50	15
1,550	1,100	200 581 08	200 581 33	200 581 58	200 582 09	41.5	-	50	15
1,600	1,150	200 581 09	200 581 34	200 581 59	200 582 10	41.9	-	50	15
1,650	1,200	200 581 10	200 581 35	200 581 60	200 582 11	42.3	-	50	15
1,700	1,250	200 581 11	200 581 36	200 581 61	200 582 12	42.7	-	50	15
1,750	1,300	200 581 12	200 581 37	200 581 62	200 582 13	43.2	-	50	15
1,800	1,350	200 581 13	200 581 38	200 581 63	200 582 14	43.6	-	50	15
1,850	1,400	200 581 14	200 581 39	200 581 64	200 582 15	44	-	50	15
1,900	1,450	200 581 15	200 581 40	200 581 65	200 582 16	44.4	-	50	15
1,950	1,500	200 581 16	200 581 41	200 581 66	200 582 17	44.9	-	50	15
2,000	1,550	200 581 17	200 581 42	200 581 67	200 582 18	45.3	-	50	15
2,050	1,600	200 581 18	200 581 43	200 581 68	200 582 19	45.7	-	50	15
2,100	1,650	200 581 19	200 581 44	200 581 69	200 582 20	46.2	-	50	15
2,150	1,700	200 581 20	200 581 45	200 581 70	200 582 21	46.6	-	50	15
2,200	1,750	200 581 21	200 581 46	200 581 71	200 582 22	47	-	50	15
2,250	1,800	200 581 22	200 581 47	200 581 72	200 582 23	47.4	-	50	15
2,300	1,850	200 581 23	200 581 48	200 581 73	200 582 24	47.9	-	50	15
2,350	1,900	200 581 24	200 581 49	200 581 74	200 582 25	48.3	-	50	15

SCOPE OF DELIVERY	SA	TA
Wheel bolts loose	Yes	Yes
Adapter bracket loose	Yes	Yes
Axle Bowden cables loose	Yes	Yes
Compensation profile loose	Yes	No

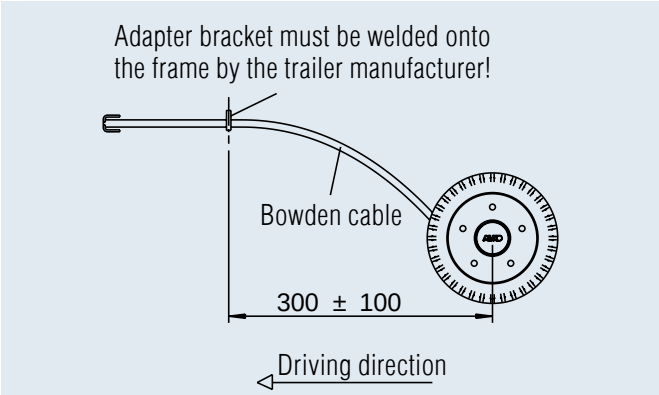

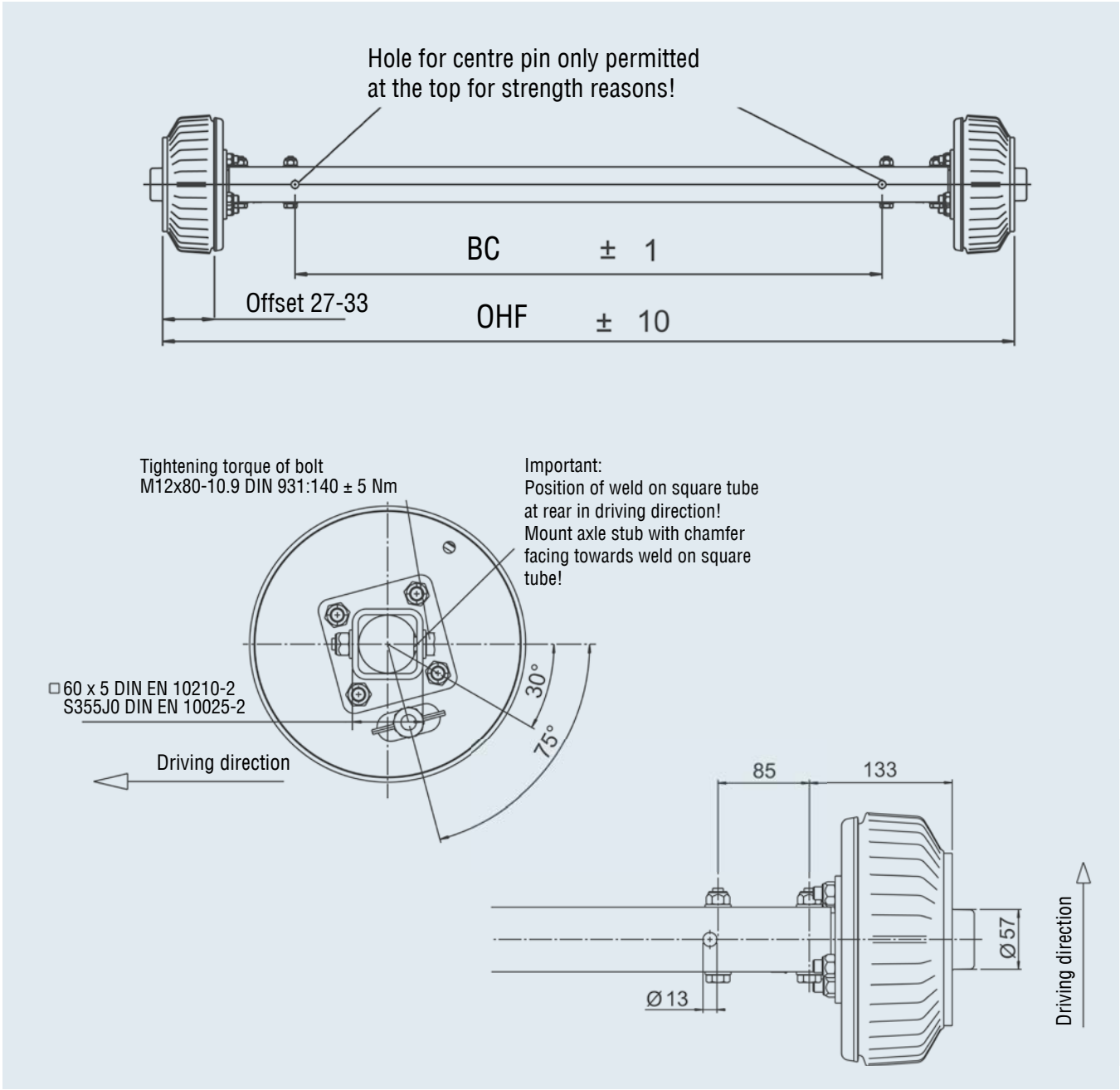

RIGID BRAKED AXLE 1,800 KG PLUS

112 x 5

TECHNOLOGY

Model:	PLUS
Axle type:	BS 1800
Axle load:	SA 1,800 kg
Wheel connection:	112x5 - M12x1.5

SURFACE TREATMENT

- Axle profile hot-dip galvanised

ACCESSORIES

- See following pages



SAP: ACHSE -- STARR GRM EA1800

Single axle with wheel connection 112x5 RIGID GBR PLUS BS 1800			Tandem axle Front axle	Rear axle	Single axle with wheel connection 112x5 watertight RIGID GBR PLUS BS 1800 WD				
OHF in mm	BC in mm	Wheel bolts Ball M 12x1.5 Axle cpl.	Wheel bolts Ball M 12x1.5 Axle cpl.	Wheel bolts Ball M 12x1.5 Axle cpl.	Wheel bolts Ball M 12x1.5 Axle cpl.				
1,200	700	200 583 01	200 583 25	200 583 50	200 584 01	56.7	-	50	15
1,250	750	200 583 02	200 583 26	200 583 51	200 584 02	57.2	-	50	15
1,300	800	200 583 03	200 583 27	200 583 52	200 584 03	57.7	-	50	15
1,350	850	200 583 04	200 583 28	200 583 53	200 584 04	58.2	-	50	15
1,400	900	200 583 05	200 583 29	200 583 54	200 584 05	58.8	-	50	15
1,450	950	200 583 06	200 583 30	200 583 55	200 584 06	59.3	-	50	15
1,500	1,000	1 421 881	200 583 31	200 583 56	200 584 07	59.8	-	50	15
1,550	1,050	200 583 07	200 583 32	200 583 57	200 584 08	60.3	-	50	15
1,600	1,100	200 583 08	200 583 33	200 583 58	200 584 09	60.8	-	50	15
1,650	1,150	200 583 09	200 583 34	200 583 59	200 584 10	61.4	-	50	15
1,700	1,200	200 583 10	200 583 35	200 583 60	200 584 11	61.9	-	50	15
1,750	1,250	200 583 11	200 583 36	200 583 61	200 584 12	62.4	-	50	15
1,800	1,300	200 583 12	200 583 37	200 583 62	200 584 13	62.9	-	50	15
1,850	1,350	200 583 13	200 583 38	200 583 63	200 584 14	63.4	-	50	15
1,900	1,400	200 583 14	200 583 39	200 583 64	200 584 15	64	-	50	15
1,950	1,450	200 583 15	200 583 40	200 583 65	200 584 16	64.5	-	50	15
2,000	1,500	200 583 16	200 583 41	200 583 66	200 584 17	65	-	50	15
2,050	1,550	200 583 17	200 583 42	200 583 67	200 584 18	65.5	-	50	15
2,100	1,600	200 583 18	200 583 43	200 583 68	200 584 19	66	-	50	15
2,150	1,650	200 583 19	200 583 44	200 583 69	200 584 20	66.5	-	50	15
2,200	1,700	200 583 20	200 583 45	200 583 70	200 584 21	67.1	-	50	15
2,250	1,750	200 583 21	200 583 46	200 583 71	200 584 22	67.6	-	50	15
2,300	1,800	200 583 22	200 583 47	200 583 72	200 584 23	68.1	-	50	15
2,350	1,850	200 583 23	200 583 48	200 583 73	200 584 24	68.6	-	50	15
2,400	1,900	200 583 24	200 583 49	200 583 74	200 584 25	69.1	-	50	15

SCOPE OF DELIVERY	SA	TA
Wheel bolts loose	Yes	Yes
Adapter bracket loose	yes	yes
Axle Bowden cables loose	yes	yes
Compensation profile loose	Yes	No

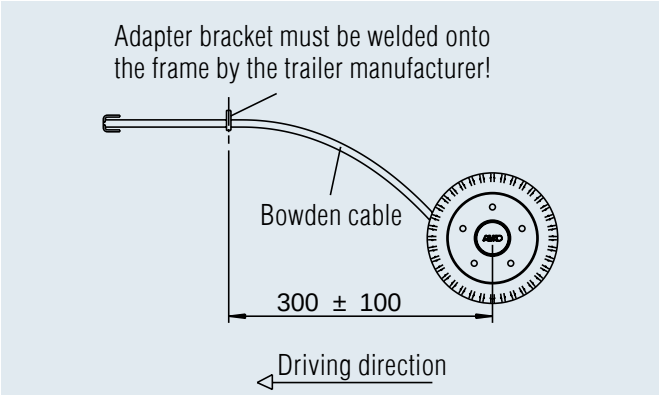

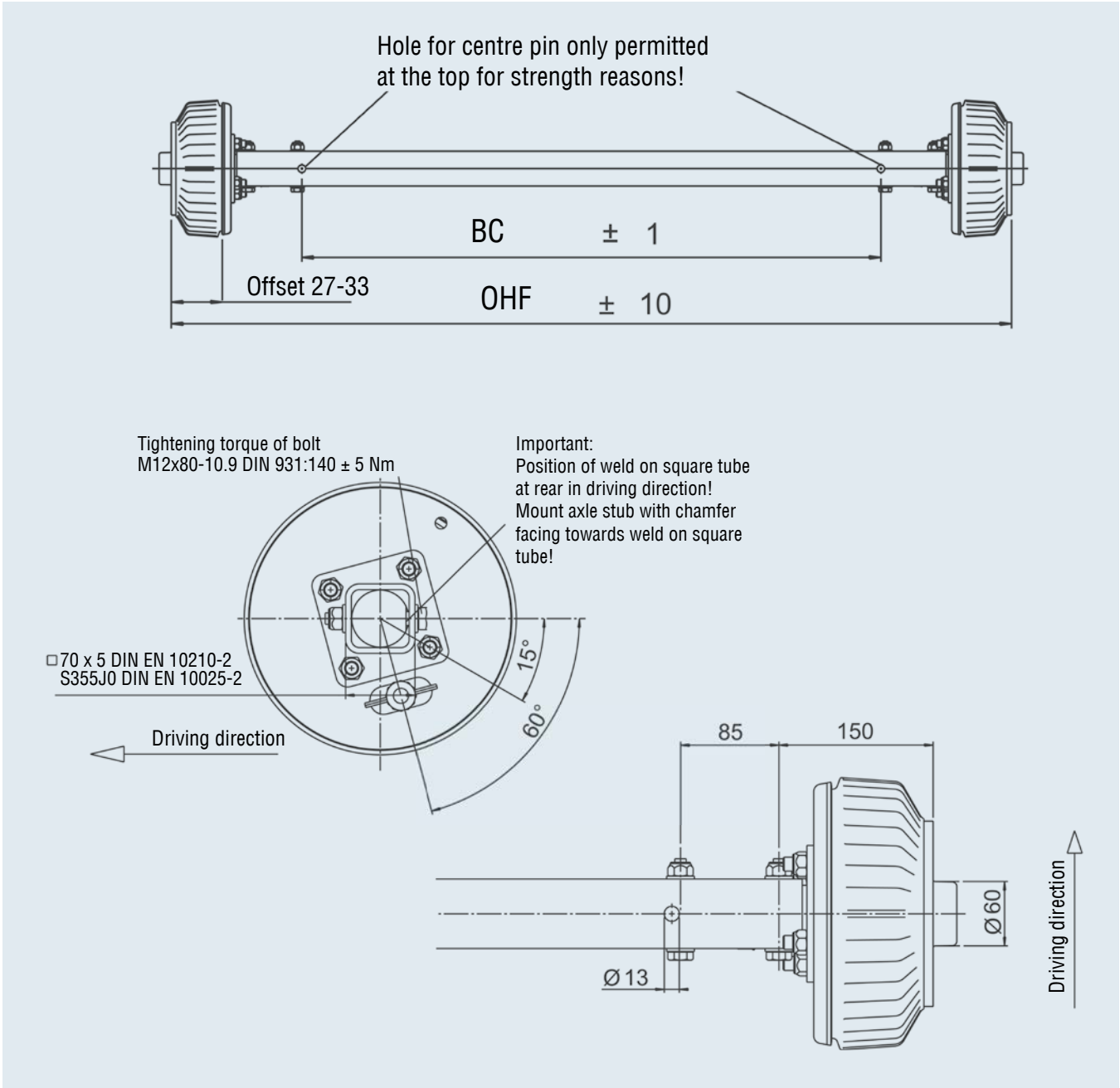

BRAKED AXLE 1,800 KG PLUS

112 x 5

TECHNOLOGY

Model:	PLUS	Wheel brake:	2361	Wheel connection:	112x5
Axle type:	B 1800-9	Suspension:	Hexagonal rubber suspension	Wheel bearing:	Compact bearing
Axle load:	SA 1,800 kg TA 1,750 kg (3500 kg)	Swing arm:	175 mm	Rim centre hole:	Min. 63 mm



AAA= AL-KO Automatic Adjustment
(automatic adjustment of the brake pads)

SAP: EURO1ACHSE GRM GLL EA1800

OHF in mm	BC in mm	❶ Single axle Axle complete Wheel bolts Ball M 12x1.5		❷ Tandem front axle Axle complete Wheel bolts Ball M 12x1.5		❸ Rear axle Axle complete Wheel bolts Ball M 12x1.5		Select rear axle from column ❸ Single and tandem axle Front axle with top hat profile and fixing bolts Wheel bolts Ball M 12x1.5					
		without AAA	with AAA	without AAA	with AAA	without AAA	with AAA	without AAA	with AAA				
1,400	900	200 050 01	200 602 01	200 050 03	200 602 27	200 050 05	200 602 53	200 050 07	200 603 01	73	-	20	10
1,450	950	200 051 01	200 602 02	200 051 03	200 602 28	200 051 05	200 602 54	200 051 07	200 603 02	73	-	20	10
1,500	1,000	244 057	200 602 03	244 057 03	200 602 29	244 057 05	200 602 55	244 057 07	200 603 03	73	-	20	2/10
1,540	1,040	200 052 01	200 602 04	200 052 03	200 602 30	200 052 05	200 602 56	200 052 07	200 603 04	74	-	20	10
1,560	1,070	200 053 01	200 602 05	200 053 03	200 602 31	200 053 05	200 602 57	200 053 07	200 603 05	74	-	20	10
1,600	1,100	244 058	200 602 06	244 058 03	200 602 32	244 058 05	200 602 58	244 058 07	200 603 06	74	-	20	2/10
1,650	1,150	200 054 01	200 602 07	200 054 03	200 602 33	200 054 05	200 602 59	200 054 07	200 603 07	75	-	20	10
1,700	1,200	244 059	200 602 08	244 059 03	200 602 34	244 059 05	200 602 60	244 059 07	200 603 08	75	-	20	2/10
1,720	1,220	200 055 01	200 602 09	200 055 03	200 602 35	200 055 05	200 602 61	200 055 07	200 603 09	75	-	20	10
1,750	1,250	244 060	200 602 10	244 060 03	200 602 36	244 060 05	200 602 62	244 060 07	200 603 10	76	-	20	10
1,800	1,300	1 210 318	200 602 11	200 049 03	200 602 37	200 049 05	200 602 63	200 049 07	200 603 11	76	-	20	2/10
1,810	1,310	200 056 01	200 602 12	200 056 03	200 602 38	200 056 05	200 602 64	200 056 07	200 603 12	76	-	20	10
1,850	1,350	200 057 01	200 602 13	200 057 03	200 602 39	200 057 05	200 602 65	200 057 07	200 603 13	76	-	20	10
1,900	1,400	244 061	200 602 14	244 061 03	200 602 40	244 061 05	200 602 66	244 061 07	200 603 14	77	-	20	2/10
1,950	1,450	200 058 01	200 602 15	200 058 03	200 602 41	200 058 05	200 602 67	200 058 07	200 603 15	77	-	20	10
2,000	1,500	244 062	200 602 16	244 062 03	200 602 42	244 062 05	200 602 68	244 062 07	200 603 16	78	-	20	2/10
2,030	1,530	200 059 01	200 602 17	200 059 03	200 602 43	200 059 05	200 602 69	200 059 07	200 603 17	78	-	20	10
2,050	1,550	244 063	200 602 18	244 063 03	200 602 44	244 063 05	200 602 70	244 063 07	200 603 18	79	-	20	10
2,080	1,580	200 060 01	200 602 19	200 060 03	200 602 45	200 060 05	200 602 71	200 060 07	200 603 19	79	-	20	10
2,100	1,600	244 101	200 602 20	244 101 03	200 602 46	244 101 05	200 602 72	244 101 07	200 603 20	79	-	20	2/10
2,125	1,625	200 061 01	200 602 21	200 061 03	200 602 47	200 061 05	200 602 73	200 061 07	200 603 21	80	-	20	10
2,170	1,670	200 062 01	200 602 22	200 062 03	200 602 48	200 062 05	200 602 74	200 062 07	200 603 22	80	-	20	10
2,200	1,700	244 064	200 602 23	244 064 03	200 602 49	244 064 05	200 602 75	244 064 07	200 603 23	80	-	20	2/10
2,250	1,750	200 063 01	200 602 24	200 063 03	200 602 50	200 063 05	200 602 76	200 063 07	200 603 24	81	-	20	10
2,300	1,800	200 064 01	200 602 25	200 064 03	200 602 51	200 064 05	200 602 77	200 064 07	200 603 25	81	-	20	2/10
2,350	1,850	200 065 01	200 602 26	200 065 03	200 602 52	200 065 05	200 602 78	200 065 07	200 603 26	81	-	20	10

SCOPE OF DELIVERY

- Single axle adapter bracket welded on (single axle and tandem adapter bracket)
- Compensation profile for single axle supplied
- Bowden cables loose
- Wheel bolts loose

Separate order for tandem

- Bolt-on tandem adapter bracket 249 236
- Tandem compensation 238 576

SURFACE TREATMENT

- Axle profile hot-dip galvanised
- Wheel brake galvanised

ACCESSORIES

- Shock absorber
  (see table of contents)

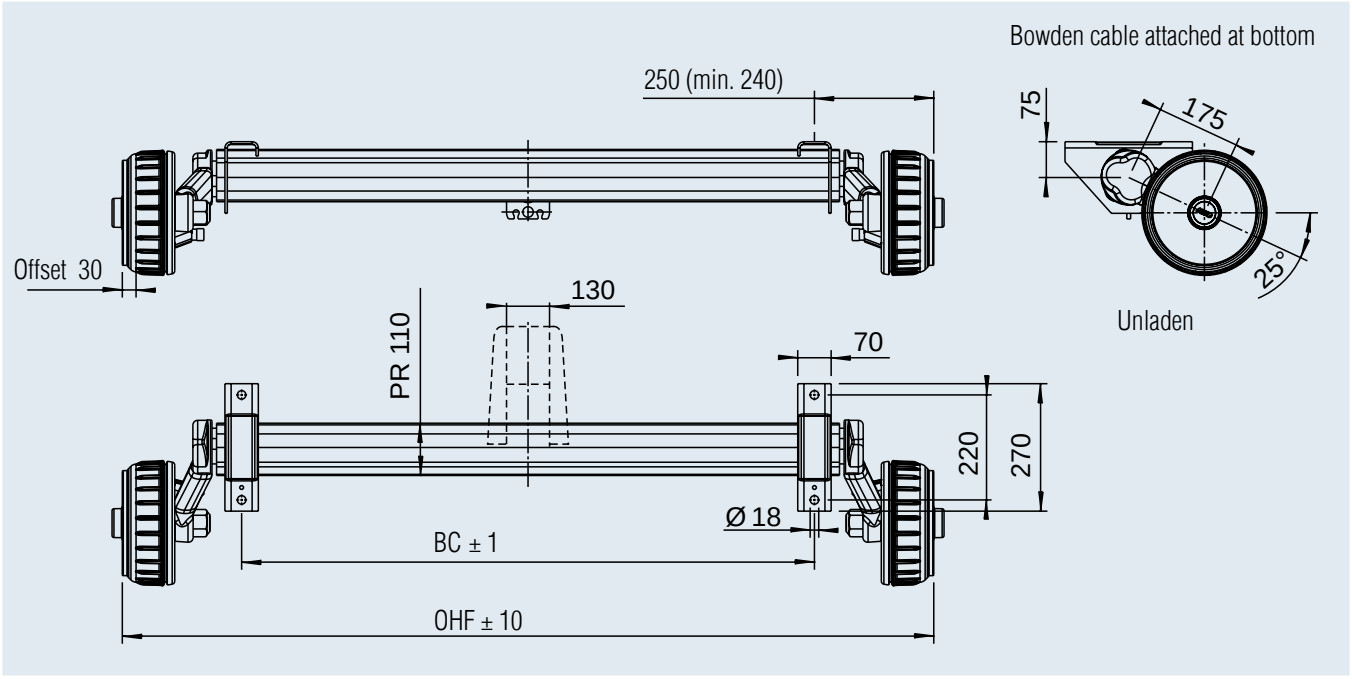

Accessories for top hat profile incl. adapter bracket for single axle and tandem

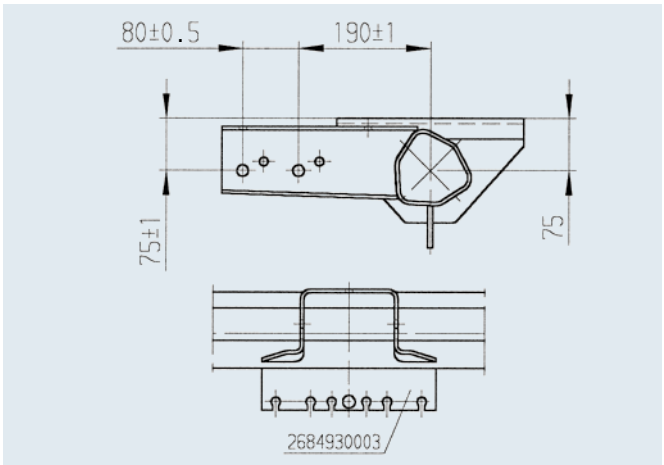

Accessories for tandem

Bolt-on tandem adapter bracket — **Part no. 249 236**

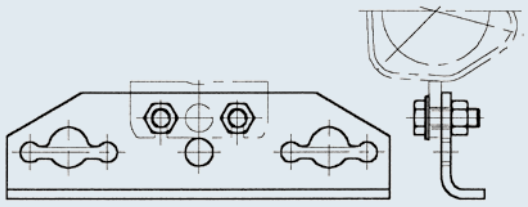

Tandem compensation — **Part no. 238 576**

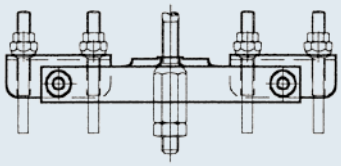

BRAKED AXLE 2,500 KG PLUS

205 x 6

TECHNOLOGY

Model:	PLUS	Suspension:	Hexagonal rubber suspension
Axle type:	B 2500-8	Swing arm:	200 mm
Axle load:	SA 2,500 kg	Wheel connection:	205x6
Wheel brake:	3062 or 3081A *(See table)*	Wheel bearing:	Tapered roller bearing
		Rim centre hole:	Min. 161 mm



SAP: ACHSE GU LNGS GRM EA2500

		Single axle Wheel nuts M 18x1.5 Ball Wheel brake		Front axle with top hat profile and fixing bolts Wheel brake		Single axle in kg		
		3081A	3062	3081A	3062	3081A	3062	
OHF in mm	BC in mm	Axle cpl.	Axle cpl.	Axle cpl.	Axle cpl.			
1,430	900	200 390 00	200 542 00	200 390 68	200 542 75	129	121	10
1,480	950	200 390 01	200 542 01	200 390 69	200 542 76	129	121	10
1,530	1,000	241 157	200 542 02	200 390 70	200 542 77	130	122	10
1,570	1,040	200 390 02	200 542 03	200 390 71	200 542 78	130	122	10
1,590	1,070	200 390 03	200 542 04	200 390 72	200 542 79	131	123	10
1,630	1,100	241 158	200 542 05	200 390 73	200 542 80	131	123	10
1,680	1,150	200 390 04	200 542 06	200 390 74	200 542 81	132	124	10
1,730	1,200	240 828	200 542 07	200 390 75	200 542 82	132	124	10
1,750	1,220	200 390 05	200 542 08	200 390 76	200 542 83	132	124	10
1,780	1,250	241 153	200 542 09	200 390 77	200 542 84	133	125	10
1,840	1,310	200 390 06	200 542 10	200 390 78	200 542 85	133	125	10
1,880	1,350	200 390 07	200 542 11	200 390 79	200 542 86	134	126	10
1,930	1,400	241 154	200 542 12	200 390 80	200 542 87	135	127	10
1,980	1,450	200 390 08	200 542 13	200 390 81	200 542 88	135	127	10
2,030	1,500	241 155	200 542 14	200 390 82	200 542 89	136	128	10
2,060	1,530	200 390 09	200 542 15	200 390 83	200 542 90	136	128	10
2,080	1,550	241 156	200 542 16	200 390 84	200 542 91	137	129	10
2,110	1,580	200 390 10	200 542 17	200 390 85	200 542 92	137	129	10
2,130	1,600	200 390 11	200 542 18	200 390 86	200 542 93	138	130	10
2,155	1,625	200 390 12	200 542 19	200 390 87	200 542 94	138	130	10
2,200	1,670	200 390 13	200 542 20	200 390 88	200 542 95	139	131	10
2,230	1,700	200 390 14	200 542 21	200 390 89	200 542 96	139	131	10
2,280	1,750	200 390 15	200 542 22	200 390 90	200 542 97	140	132	10

SCOPE OF DELIVERY

- Single axle adapter bracket welded on
- Compensation profile
- Bowden cable loose
- Wheel nuts mounted

SURFACE TREATMENT

- Axle profile hot-dip galvanised
- Wheel brakes dip primed black

ACCESSORIES

- Shock absorber
  (see table of contents)

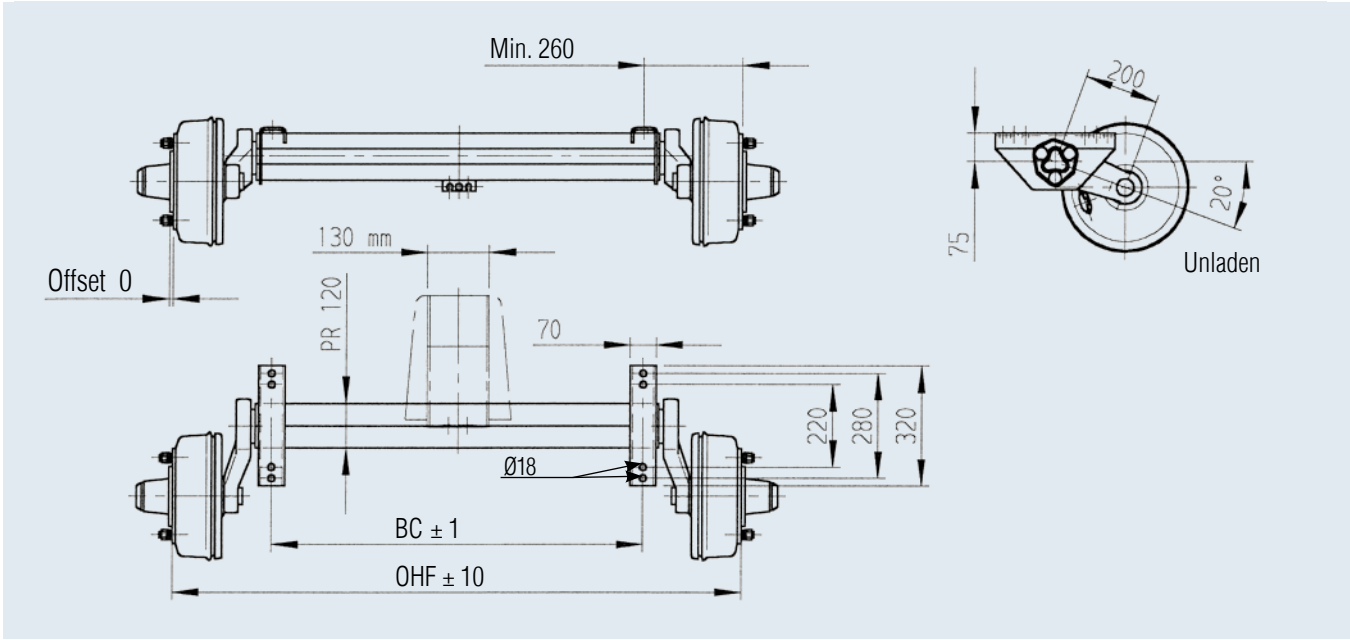

Accessories for top hat profile incl. adapter bracket for single axle

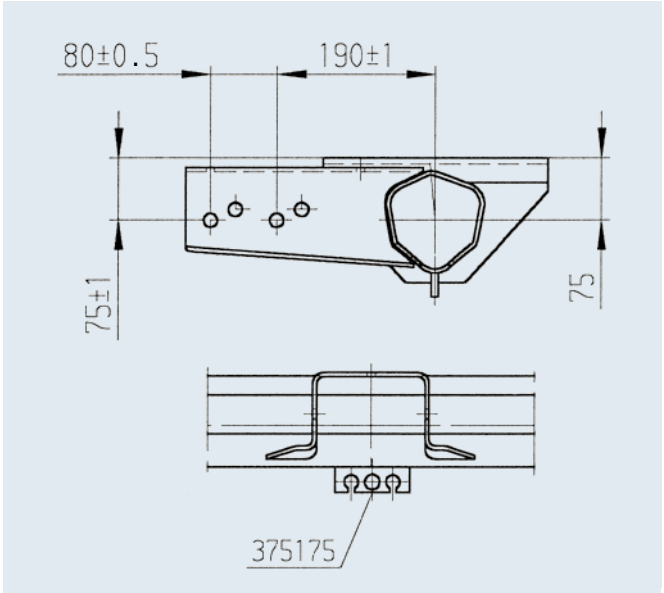

BRAKED AXLE 3,000 KG PLUS

205 x 6

TECHNOLOGY

Model:	PLUS	Suspension:	Hexagonal rubber suspension
Axle type:	B 3000-2	Swing arm:	3,000 kg, 175 mm
Axle load:	SA 3,000 kg	Wheel connection:	205x6
Wheel brake:	3062 or 3081B *(See table)*	Wheel bearing:	Tapered roller bearing
		Rim centre hole:	Min. 161 mm



SAP: ACHSE GU LNGS GRM EA3000

B 3000-2		**Single axle** **Wheel nuts M 18x1.5** **Ball**		**Front axle** **with top hat profile and fixing bolts**				
		Wheel brake		**Wheel brake**		**Single axle in kg**		
		3081 B	**3062**	**3081 B**	**3062**	**3081 B**	**3062**	
OHF in mm	**BC in mm**	**Axle cpl.**	**Axle cpl.**	**Axle cpl.**	**Axle cpl.**			
1,570	1,100	1 212 403	1 213 663	1 212 404	1 213 664	130	120	20
1,770	1,300	1 223 400	1 223 402	1 223 404	1 223 406	133	123	20
1,970	1,500	1 223 401	1 223 403	1 223 405	1 223 407	136	126	20

SCOPE OF DELIVERY

- Single axle adapter bracket welded on
- Compensation profile
- Bowden cable loose
- Wheel nuts mounted

SURFACE TREATMENT

- Axle profile hot-dip galvanised
- Wheel brakes dip primed black

ACCESSORIES

- Shock absorber
  (see table of contents)

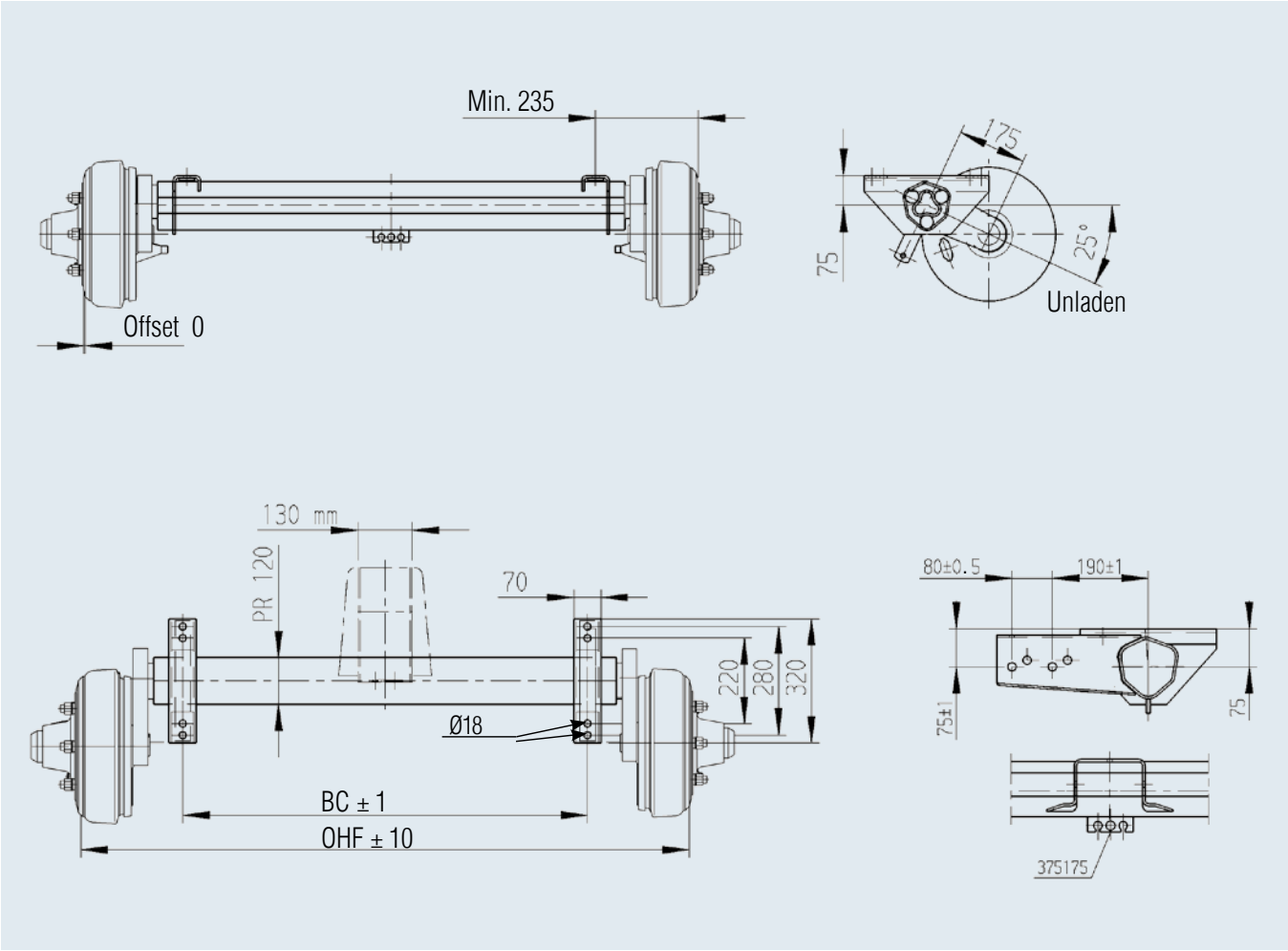

BRAKED AXLE 3,500 / 4,000 KG PLUS

205 x 6

TECHNOLOGY

Model:	PLUS	Suspension:	Steel torsion bar suspension
Axle type:	BT 3500	Swing arm:	200 mm
	BT 4000	Wheel connection:	205x6
Axle load:	SA 3,500 kg	Wheel bearing:	Tapered roller bearing
Wheel brake:	3081B	Rim centre hole:	Min. 161 mm



SAP: ACHSE ST LNGS GRM EA3500

BT 3500, 3,500 kg		**Single axle**	**Front axle**		
			with top hat profile and fixing bolts		
		Wheel nuts M 18x1.5	**Wheel nuts M 18x1.5**		
		Ball	**Ball**	**Single axle in kg**	
OHF in mm	**BC in mm**	**Axle cpl.**	**Axle cpl.**		
1,640	1,100	274 165	200 396 03	182	20

BT 4000, 4,000 kg		**Single axle**	**Front axle**		
			with top hat profile and fixing bolts		
		Wheel nuts M 18x1.5	**Wheel nuts M 18x1.5**		
		Ball	**Ball**	**Single axle in kg**	
OHF in mm	**BC in mm**	**Axle cpl.**	**Axle cpl.**		
1,640	1,100	274 166	200 397 03	182	20

SCOPE OF DELIVERY
- Single axle adapter bracket welded on
- Compensation profile
- Bowden cable loose
- Wheel nuts mounted

SURFACE TREATMENT
- Axle profile hot-dip galvanised
- Wheel brake 3081B dip primed black

ACCESSORIES
- Shock absorber
  (see table of contents)

Bowden cable attached at bottom

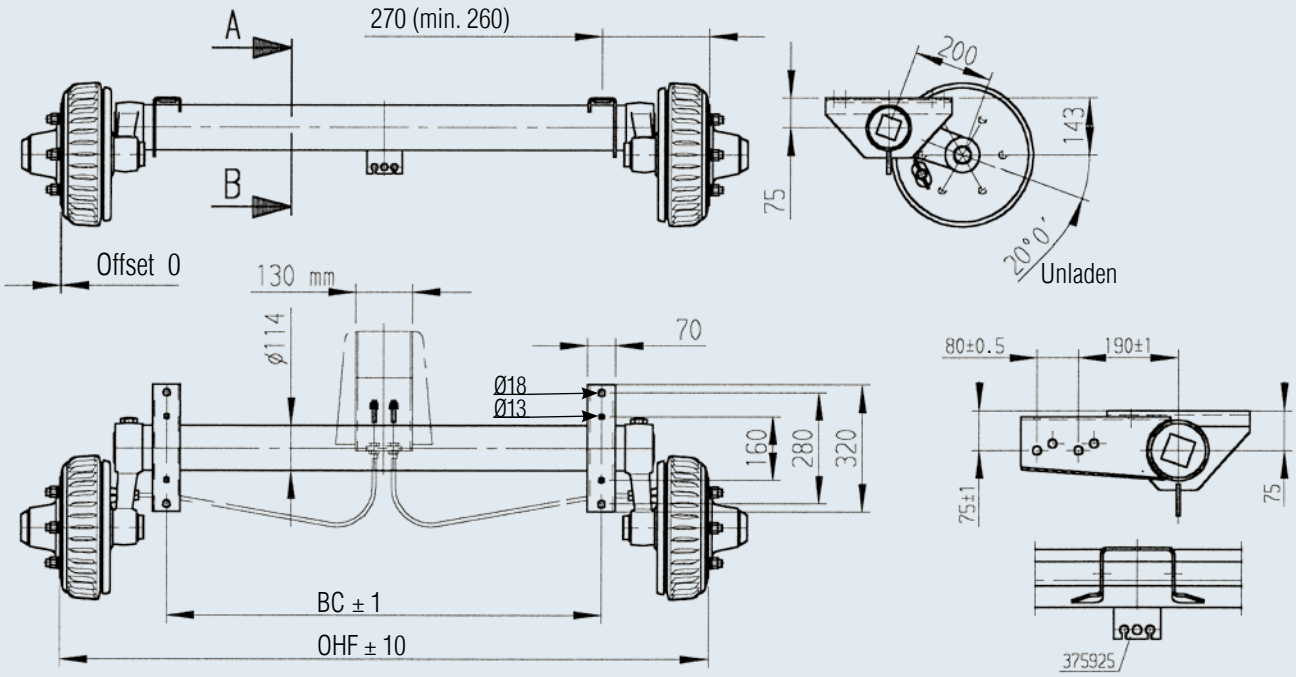

Top hat profile incl. adapter bracket for single axle

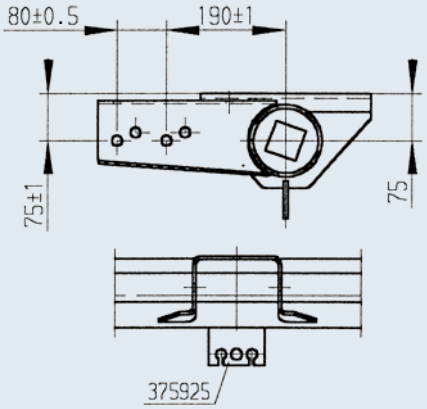

AL-KO PREMIUM / PROFI BRAKED AXLES

Product differentiation

PREMIUM/PROFI BRAKED AXLES – VARIANTS / DETAILS

DELTA SEMI-TRAILING ARM AXLE VERSION FOR CARAVANS

PREMIUM/PROFI braked axles "Details"	**1,000 kg**	**1,350 kg**	**1,500 kg**
Gross weight kg, single axle	1,000	1,350	1,500
Gross weight kg, tandem axle	2,000	2,700	3,000
Suitable only for	Caravans	Caravans	Caravans
Type of suspension	Hexagonal rubber suspension	Hexagonal rubber suspension	Hexagonal rubber suspension
Axle profile (semi-trailing arm axle), diameter	Hexagonal, 97 mm	SL 97 hex.	SL 97 hex.
Suspension maintenance	No, maintenance-free	No, maintenance-free	No, maintenance-free
Swing arm design	Hollow	Hollow	Hollow
Swing arm length (mm)	185	185	185
Suspension comfort set-up	←		
Additional roll stability through semi-trailing arm technology	Yes	Yes	Yes
Camber and toe adjustment through semi-trailing arm technology	Yes	Yes	Yes
Wheel brake type	2051	2051	2051
Wheel bearing design	Compact bearing	Compact bearing	Compact bearing
Bearing maintenance required?	No, maintenance-free	No, maintenance-free	No, maintenance-free
Brake drum with cooling ribs	Yes	Yes	Yes
Independent wheel suspension	Yes	Yes	Yes
Wheel arch damage possible with extreme overload?	No	No	No
Better heat dissipation through brake drums with cooling ribs	Yes	Yes	Yes
Swing arm connection to axle stub	Bolted in all areas	Bolted in all areas	Bolted in all areas
Toe-in adjustment for minimal tyre wear possible?	Yes	Yes	Yes
Brake pads free of asbestos, corrosion-resistant, without iron content	Yes	Yes	Yes
Options / surcharge			
Automatic brake adjustment AAA available	Yes	Yes	Yes
Shock absorber bracket fastening	Plug-in	Plug-in	Plug-in



1,600 kg	**1,700 kg**	**1,800 kg**
1,600	1,700	1,800
3,200	3,200	3,500
Caravans	Caravans	Caravans
Hexagonal rubber suspension	Hexagonal rubber suspension	Hexagonal rubber suspension
SL 97 hex.	SL 97 hex.	SL 110 hex.
No, maintenance-free	No, maintenance-free	No, maintenance-free
Forged	Forged	Forged
185	185	185
Optimal (very fine / comfortable) →		
Yes	Yes	Yes
Yes	Yes	Yes
2361	2361	2361
Compact bearing	Compact bearing	Compact bearing
No, maintenance-free	No, maintenance-free	No, maintenance-free
Yes	Yes	Yes
Yes	Yes	Yes
No	No	No
Yes	Yes	Yes
Bolted in all areas	Bolted in all areas	Bolted in all areas
Yes	Yes	Yes
Yes	Yes	Yes
Yes	Yes	Yes
Welded	Welded	Welded

PREMIUM / PROFI BRAKED AXLES

1,000 / 1,350 / 1,500 / 1,600 / 1,700 / 1,800 kg

AREA OF APPLICATION

These axles must only be installed in caravans.



SEMI-TRAILING ARM AND INDIVIDUAL WHEEL SUSPENSION ACT COUNTER TO CENTRIFUGAL FORCE!

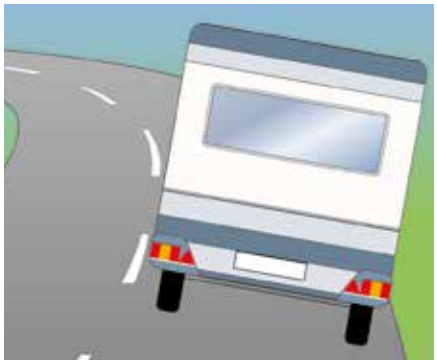

When cornering or during roll movements, the wheel on the outside of the curve is always subjected to a higher load due to the centrifugal force. The wheel on the inside of the curve tends to lift off the road surface.

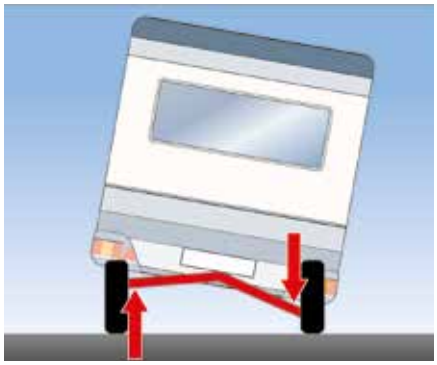

The AL-KO Delta semi-trailing arm axle acts counter to centrifugal force: The individual wheels mounted on arms (swing arms) move around the axle located at an angle in space during suspension compression and rebound.

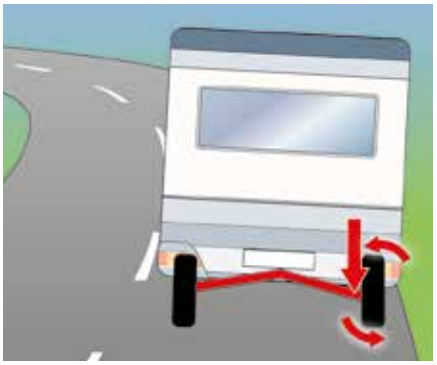

The force acting on the wheel on the outside of the corner is transmitted via the swing arm onto the axle stub of the wheel with the effect that it increases its toe-in and negative camber (to the inside). The wheel braces itself against the centrifugal force, thus supporting the vehicle on the inside.

ADDITIONAL ROLL STABILITY WITH THE AL-KO EURO DELTA SEMI-TRAILING ARM AXLE

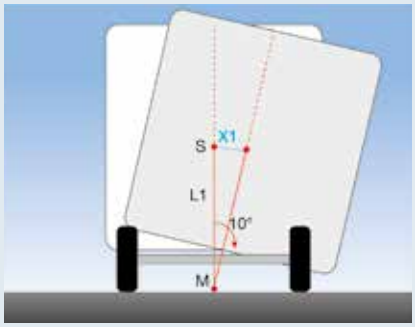

Conventional axle

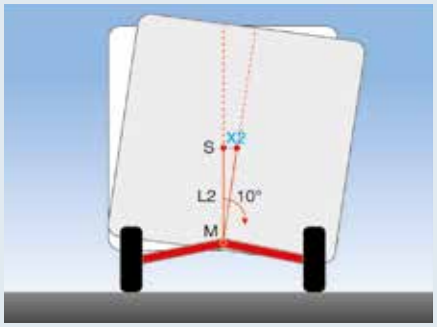

Delta semi-trailing arm axle

Shifting the centre of momentum upwards closer to the centre of gravity reduces the roll travel (see diagram (X1, X2)). This means that, due to the smaller roll lever arm of the semi-trailing arm axle (distance from the trailer's centre of gravity to the centre of momentum), only relatively small roll movements are still possible given the same force application – e.g. crosswind, on bridges or during overtaking manoeuvres.

AL-KO SEMI-TRAILING ARM AXLES HAVE BEEN DEVELOPED AND APPROVED SPECIFICALLY FOR USE IN CARAVANS.

CARAVANS ARE ONLY OPERATED WITHIN THE NOMINAL LOAD RANGE, AND ARE VERY DEMANDING IN TERMS OF DRIVING DYNAMICS DUE TO THEIR DESIGN, PARTICULARLY AT HIGH SPEEDS.

THESE AXLES HAVE BEEN DEVELOPED AND APPROVED PRECISELY FOR THESE BOUNDARY CONDITIONS.

NO OTHER APPLICATION AREA IS PERMITTED.



TANDEM AXLE UNIT BRAKED

1,600 to 3,500 kg

TECHNOLOGY

Axle load:	See table
Wheel brake:	See table
Suspension:	Hexagonal rubber suspension
Swing arm:	See table
Wheel connection:	See table
Wheel bearing:	Compact bearing

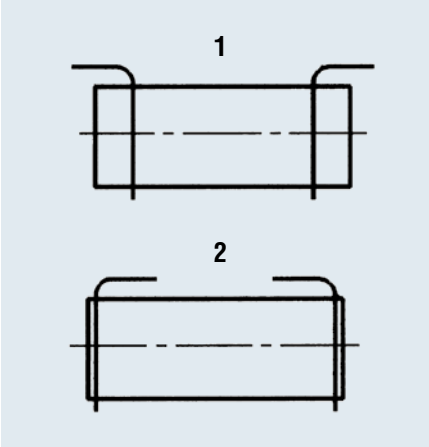

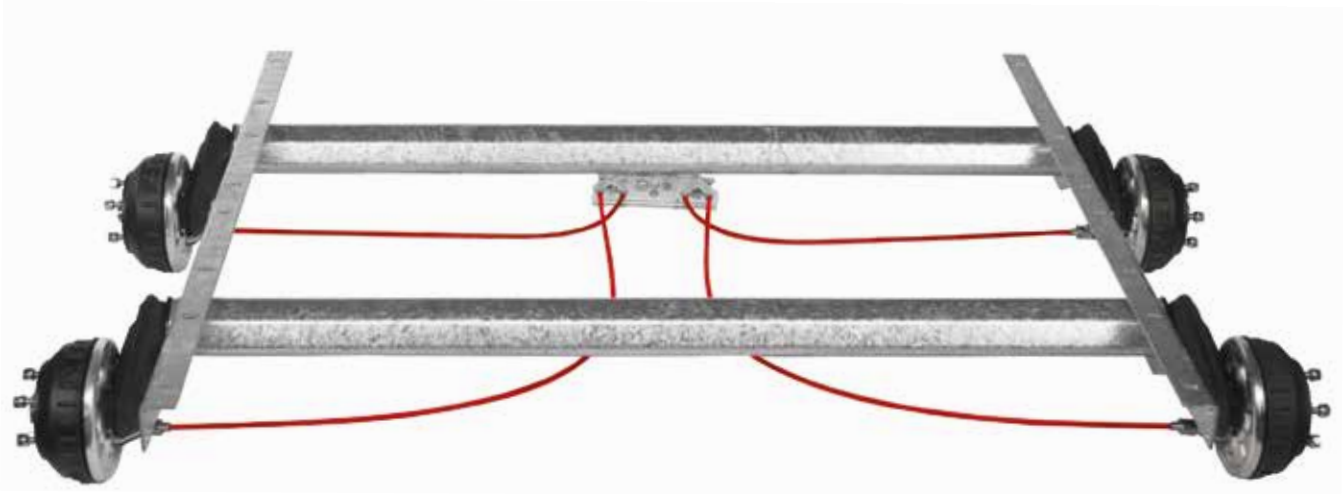

Part no.	Type	Axle load	Axle dimensions			Rims and tyres					
			BC A	OHF C	Axle beam	Wheel brake	Wheel con-nection	Wheel bolt	Offset from to	Recom-mended rims	Recommended tyres
		kg	mm	mm	Ø				mm		
244 076*	2xB 850	1,600	1,550	2,000	80	1637	100x4	M12x1.5 taper	27 – 45	4½ Jx13	165 R 13
244 077**	2xB1000	2,000	1,550	2,000	97	2051	112x5	M12x1.5 ball	26 – 40	5 Jx14	175 R 14
244 078**	2xB1200	2,500	1,550	2,000	97	2051	112x5	M12x1.5 ball	26 – 30	5½ Jx14	185 R 14
244 079**	2xB1600	3,000	1,550	2,000	97	2051	112x5	M12x1.5 ball	26 – 30	5½ Jx14	185 R 14 C
245 532**	2xB1800	3,500	1,550	2,050	110	2361	112x5	M12x1.5 ball	26 – 30	6 Jx14	185 R 14 C
249 159*	2xB 850	2,000	1,550	2,000	80	1637	100x4	M12x1.5 taper	27 – 33	5½ Jx13	185/70 R 13 max. dyn.
249 160*	2xB 850	2,000	1,550	2,000	80	1637	112x5	M12x1.5 ball	27 – 33	5½ Jx13	Ø 0.606 min. dyn. Ø 0,420
249 161*	2xB 850	2,000	1,550	2,000	80	2051	112x5	M12x1.5 ball	27 – 33	5½ Jx14	185 R 14 max. dyn.
249 162*	2xB1200	2,600	1,550	2,000	97	2051	112x5	M12x1.5 ball	30 – 33	5½ Jx14	Ø 0.640 min. dyn. Ø 0,540
249 163*	2xB1600	3,000	1,550	2,000	97	2051	112x5	M12x1.5 ball	30	5½ Jx15	185 R 14 C

*BASIC **PLUS

SCOPE OF DELIVERY

- Single axle trailer adapter bracket welded on
- Tandem plug-on adapter bracket loose
- Tandem compensation loose
- Bowden cables loose
- Wheel bolts loose
- Shock absorber brackets only welded-on in type B1800

SURFACE TREATMENT

- Hot-dip galvanised axle profile
- Wheel brakes galvanised

ACCESSORIES

- Shock absorber (see table of contents)

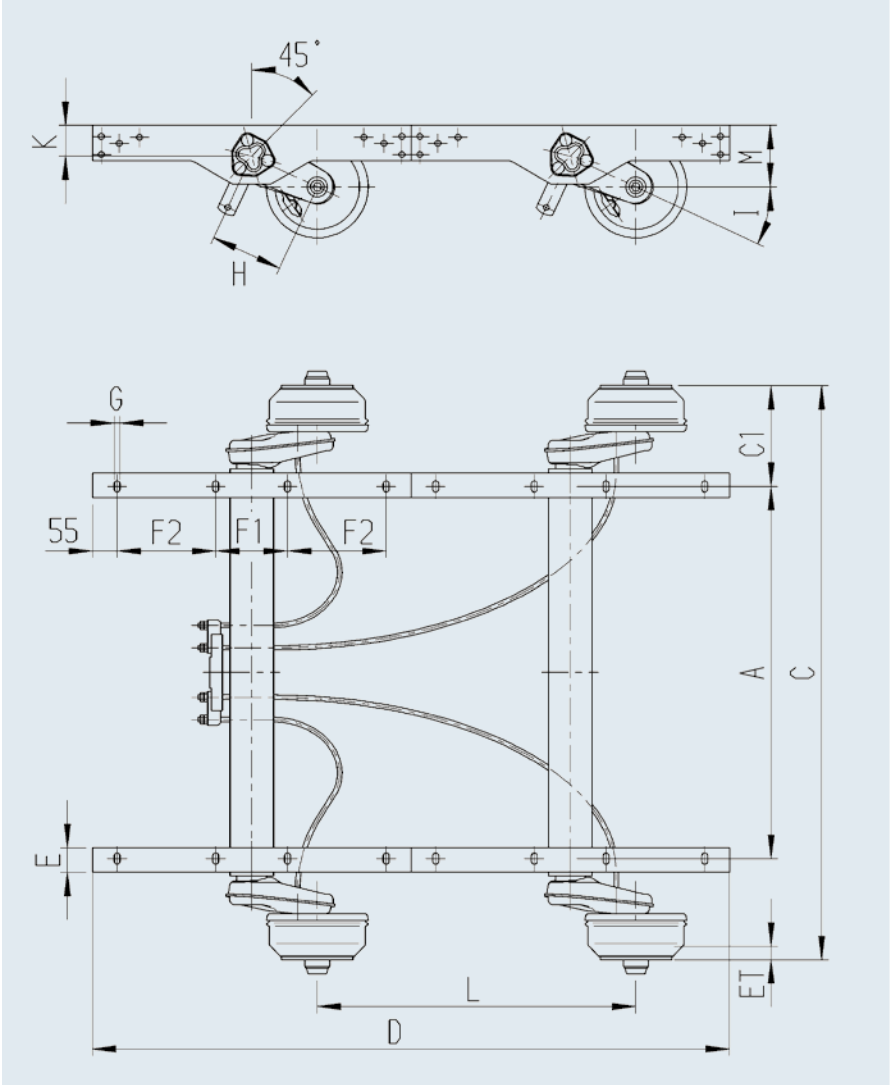

4

Clamping mount mm						Swing arm						Minimum axle dimensions					
Variant no.	D	E	F1	F2	G	H	Standard I	Special I	K	L	M at 25°	C min. mm	C1 min. with clamping mount variant no. mm				
1	1,420	55	160	220	13	158	25°	–	65	710	133	1,190	200/1	90	-	10	20
1	1,420	55	160	220	13	175	25°	–	65	710	140	1,220	215/1	130	-	10	20
1	1,420	55	160	220	13	175	25°	–	65	710	140	1,325	215/1	131	-	10	20
1	1,420	55	160	220	13	175	25°	–	65	710	133	1,420	230/1	150	-	10	20
2	1,460	60	200	220	18	175	25°	–	75	730	150	1,320	240/2	161	-	10	20
2	1,420	55	160	220	13	158	25°	–	65	710	133	1,100	182/2	90	-	10	20
2	1,420	55	160	220	13	158	25°	–	65	710	133	1,100	182/2	90	-	10	20
2	1,420	55	160	220	13	161.5	25°	–	69	710	133	1,100	182/2	93	-	10	20
2	1,420	55	160	220	13	161.5	25°	–	69	710	133	1,150	187/2	118	-	10	2
2	1,420	55	160	220	13	160	25°	–	69	710	133	1,250	187/2	120	-	10	20

BRAKED HALF AXLES

1,300 kg / 112 x 5 and 1,500 kg / 112 x 5

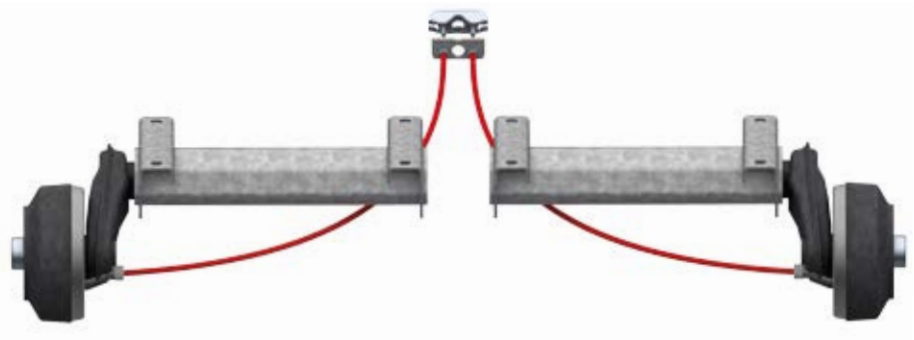

SCOPE OF DELIVERY

- Adapter bracket single axle loose
- Single axle trailer compensation profile loose
- Bowden cables loose
- Wheel bolts loose

SURFACE TREATMENT

- Hot-dip galvanised axle profile

Part no.
244 068

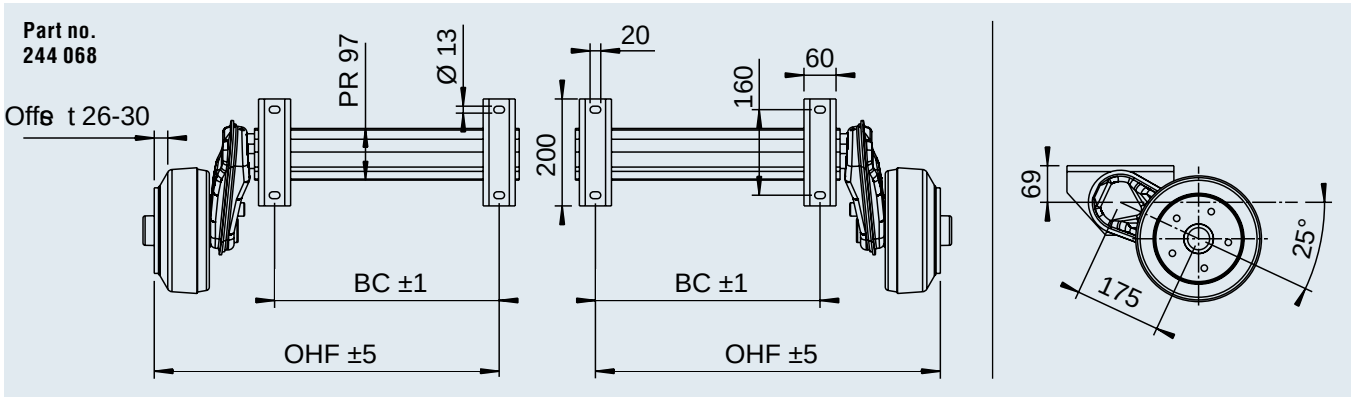

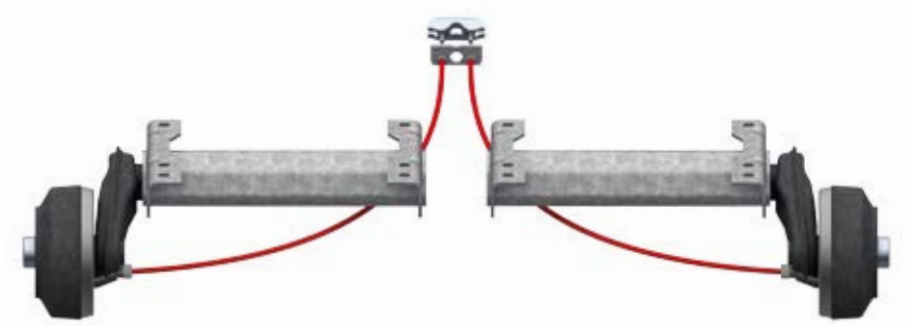

Part no.
1 226 706

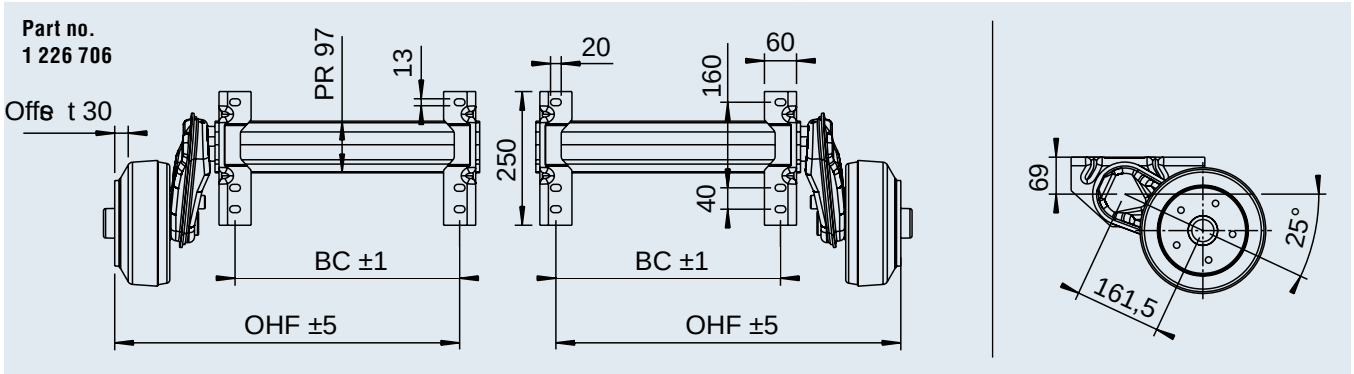

SAP: EURO1ACHSE GRM GLL HA1300

Part no.	Axle load per pair kg	Type	Wheel brake	Wheel connection	BC mm	OHF mm				
244 068	1,300	B 1200-5	2051 vers. A	112x5	420	700	51	–	30	10
1 226 706	1,500	B 1200-5	2051 vers. A	112x5	420	645	49	–	30	10

BRAKED HALF AXLES

1,800 kg / 112 x 5 and 2,500 kg / 205 x 6

SCOPE OF DELIVERY

- Adapter bracket single axle loose
- Single axle trailer compensation profile loose
- Bowden cables loose
- Wheel bolts loose

SURFACE TREATMENT

- Hot-dip galvanised axle profile

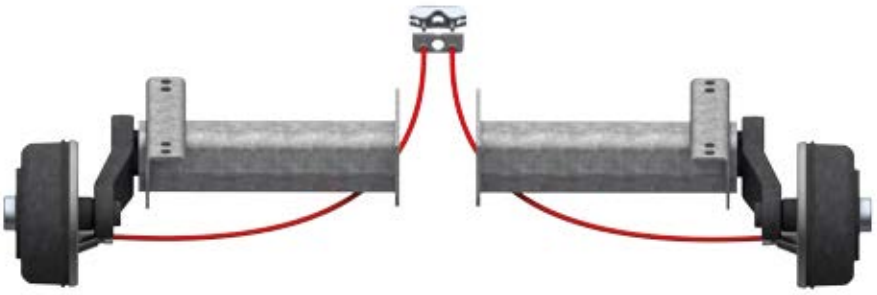

Part no.
1 227 682

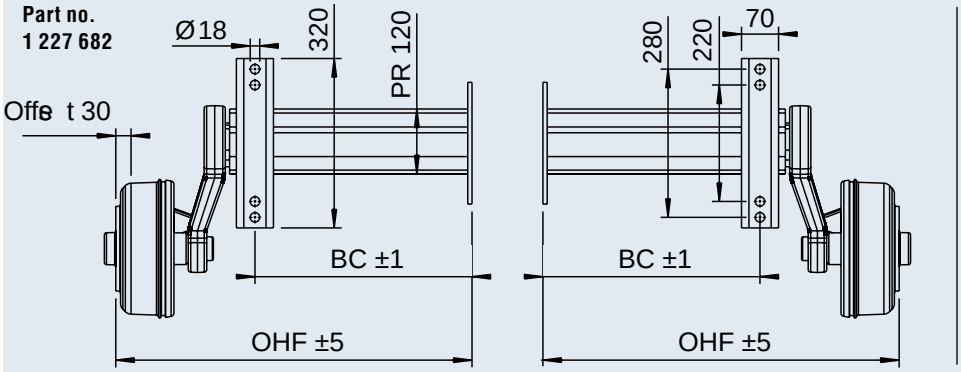

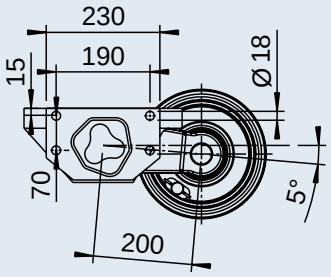

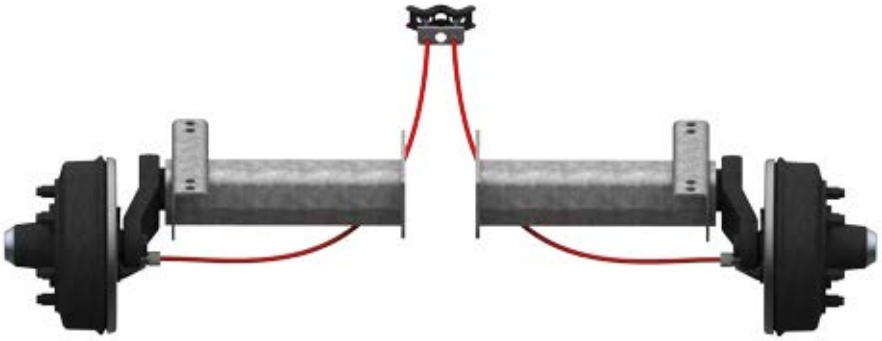

Part no.
1 227 681

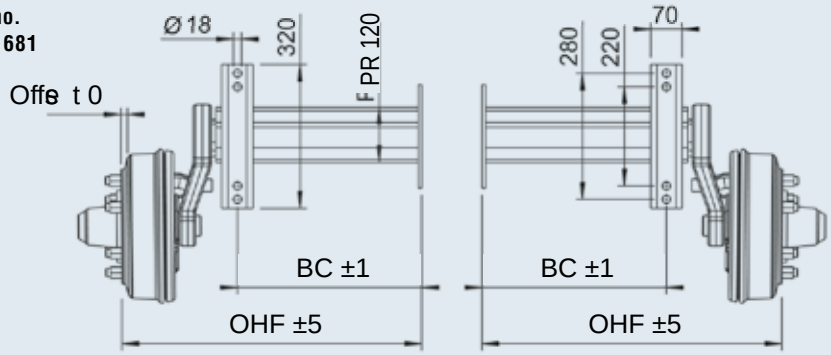

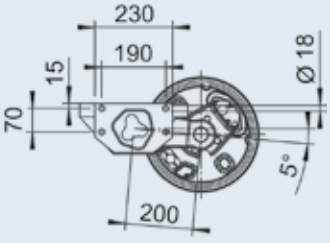

SAP: ACHSE GU LNGS GRM EA1800

Part no.	Axle load per pair kg	Type	Wheel brake	Wheel connection	BC mm	OHF mm				
1 227 682	1,800	B 2000-0	2361	112x5	410	673	92	–	30	10
1 227 681	2,500	B 2500-8	3062	205x6	410	668	108	–	30	10

BRAKED AXLES

for hydraulic brake force transmission 1,600 / 1,800 / 2,500 kg



SCOPE OF DELIVERY

Axle with slave cylinder attachment kit cpl.:

Bracket welded on, welded on slave cylinder bracket, Bowden cables, compensation profile, ball-head wheel bolts,small parts, operating instructions

Axle with slave cylinder attachment kit cpl. (special variant) B 1800

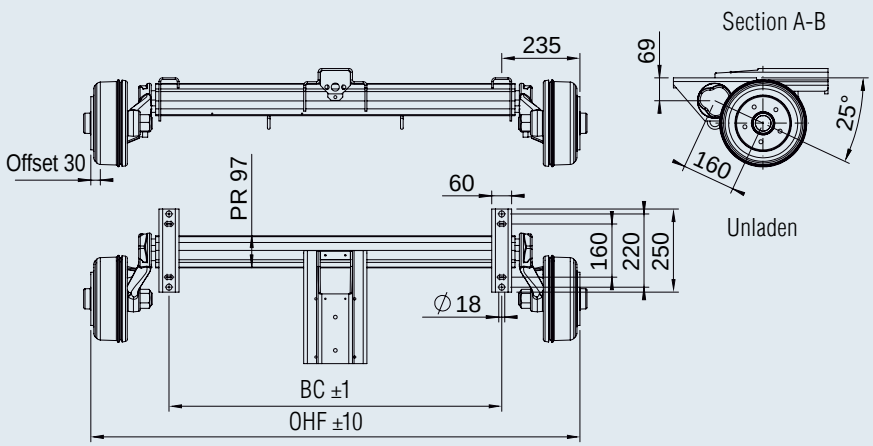

SAP: EURO1ACHSE HYD GLL EA1600

Part no.	Axle type	Axle load kg	Wheel brake type	Wheel connec-tion	BC mm	OHF mm	Axle beam Ø	Rec. rims	Rec. tyres				
1 211 952	B 1600	1,600	2361	112x5	1,000	1,470	97	6 J 14	185 R 14 C	72	–	20	20
1 210 973	B 1800	1,800	2361	112x5	1,000	1,500	110	6 J 14	185 R 14 C	76	–	20	20
1 210 877	B 2500	2,500	3081 A	205x6	1,000	1,530	120	6.00G-16	7.00 R 16	133	–	–	20

COMPACT BRAKED TRIDEM AXLES

3,500 kg

TECHNOLOGY

Model:	COMPACT
Axle type:	B1600-3
Axle load:	SA 1,500 kg
	TRI 3,500 kg
Wheel brake:	2051
Suspension:	Hexagonal rubber suspension
Swing arm:	161.5 mm
Wheel connection:	112x5
Wheel bearing:	Compact bearing
Centre hole rim:	Min. 57 mm

SCOPE OF DELIVERY

- Adapter bracket welded on
- Single axle and tandem compensation profile
- Bowden cables loose
- Wheel bolts loose

SURFACE TREATMENT

- Hot-dip galvanised axle profile
- Wheel brake galvanised

ACCESSORIES

- Shock absorber



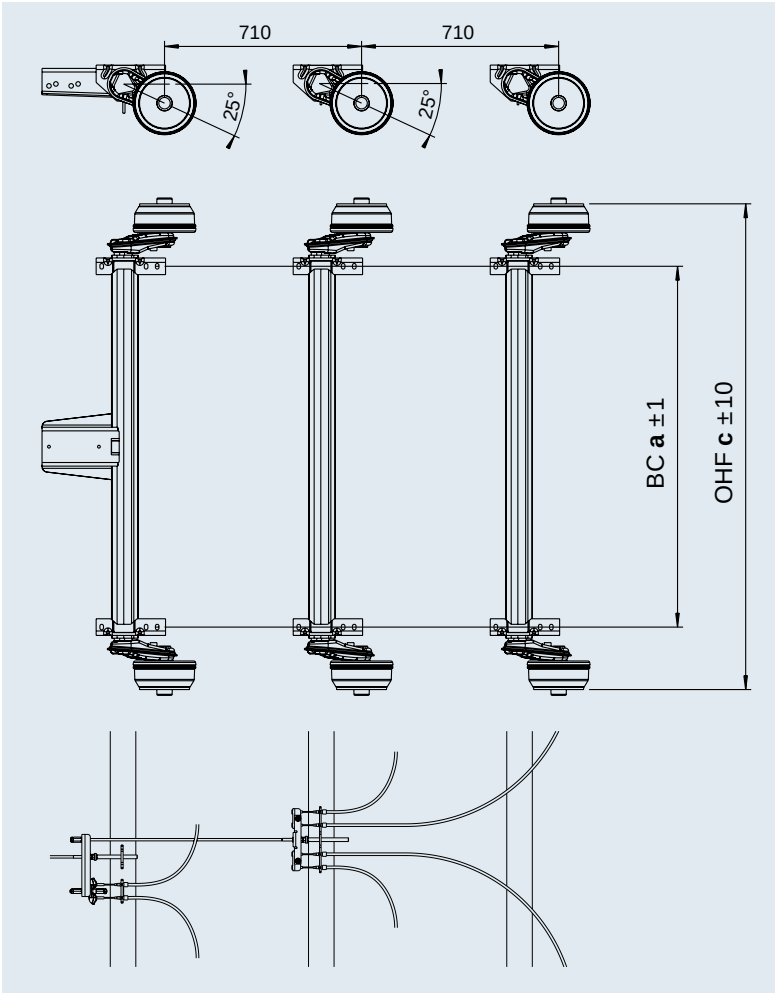

SAP: COMP-ACHSE GRM GLL TRI3500

Part no. without AAA	Part no. with AAA	BC a mm	OHF c mm	Wheel bolts				
1 422 276	–	1,300	1,750	Ball M12x1.5	159	–	25	10

BRAKED AXLES WITH DRIVE SHAFT

Single axle trailer up to 1,800 kg, tandem up to 3,500 kg

YOUR ADVANTAGE

- Trailer independent from towing vehicle (no PTO connection required on towing vehicle)
- Wheel brake left cpl. prepared with drive shaft (spline shaft profile according to DIN ISO 14 - 6 x 21 x 25)



SCOPE OF DELIVERY

- Axle cpl. (see technical drawing)
- Single axle adapter bracket welded on with top hat profile SA and TA adapter bracket
- Single axle compensation profile
- Bowden cables loose
- Wheel bolts loose (standard M12 x 1.5 ball)
- Operating instructions

SURFACE TREATMENT

- Hot-dip galvanised axle profile
- Axle link with top coat
- Brake back plate powder-coated
- Drive shaft briefly gas-nitrided

SAMPLE APPLICATIONS

- Gritter trailer
- Trailer with cooling unit (rolling energy is converted into electricity by the drive shaft)



	Single axle trailer				Tandem*			
Axle load	1,300 kg	1,600 kg	1,800 kg	2,000 kg	2,600 kg	3,200 kg	3,500 kg	3,500 kg
Axle profile	97x4	110x4	110x4	120x5	97x4	110x4	110x4	120x5
Wheel brake type	2051	2361	2361	2361	2051	2361	2361	2361
Axle distance rec.	–	–	–	–	650 mm	650 mm	650 mm	650 mm

*With tandem axle, the left axle link on the rear axle is equipped with the drive shaft

BRAKED AXLES WITH DRIVE SHAFT

Single axle trailer up to 2,000 kg, tandem up to 3,500 kg

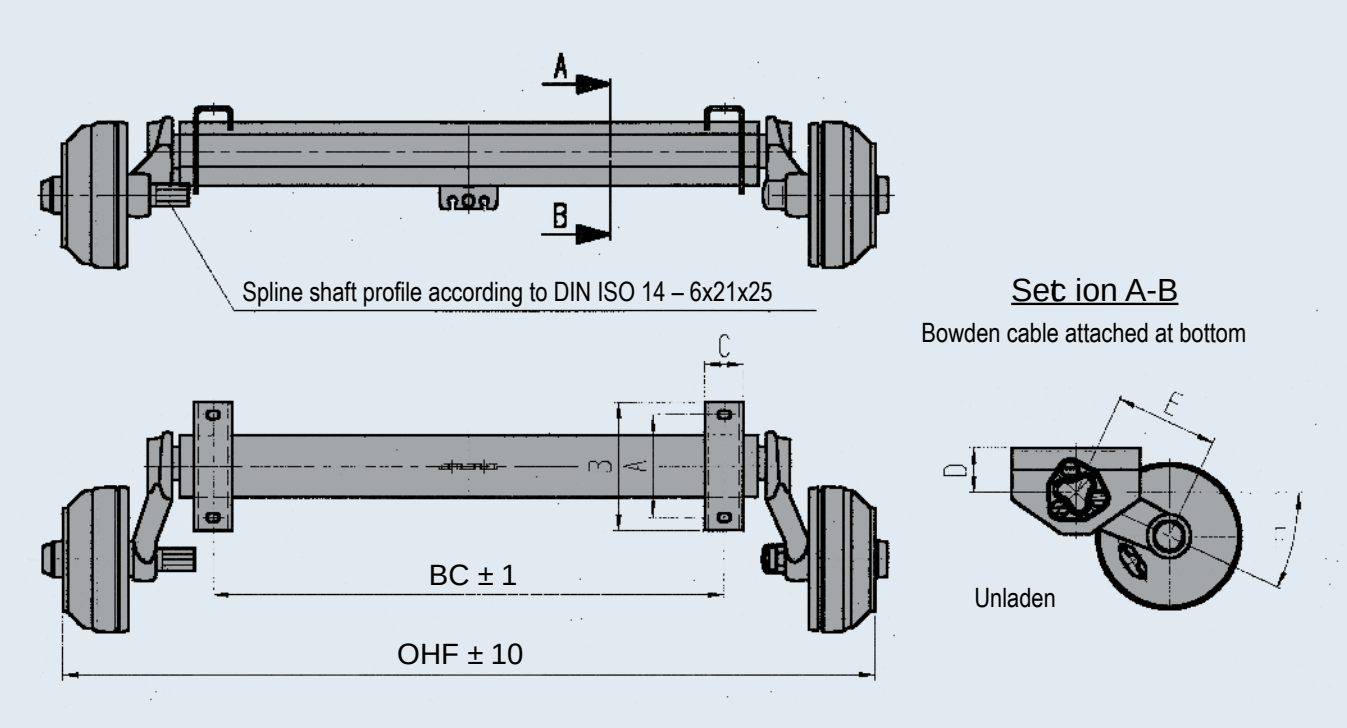

ORDER NOTE:
Axles according to order overview optionally available with top hat profile and/or tandem adapter bracket as standard welded on at the AL-KO factory.

Accessories for welded-on top hat profile

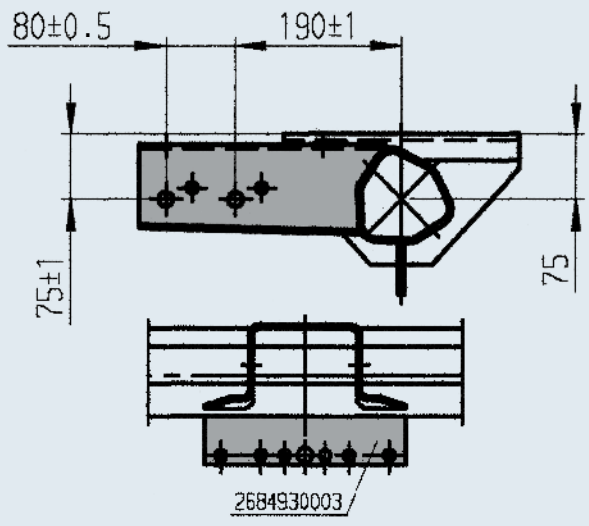

Axle type	Axle load SA (kg)	Axle load TA (kg)	Wheel brake Type	Wheel connec-tion	BC (mm)	OHF (mm)	Dimen-sion A (mm)	Dimen-sion B (mm)	Dimen-sion C (mm)	Dimen-sion D (mm)	Dimen-sion E (mm)	Dimen-sion F (mm)	Axle beam
B 1200-5	1,300	2,600	2051	112x5	800-1,800	1,290-2,290	160	200	60	65	160	25°	97x4
B 1800-5	1,600	3,200	2361	112x5	800-1,800	1,300-2,320	220	267	70	75	175	25°	110x4
B 1800-9	1,800	3,500	2361	112x5	800-1,800	1,300-2,320	220	267	70	75	175	25°	110x4
B 2000-4	2,000	3,500	2361	112x5	845-1,800	1,345-2,345	220/280	320	70	75	175	25°	120x5

LOWERING AXLES

Variants

- **Lowering down to 140 mm** with **axle types BRA 1600** with **swing arm length 160 mm**
- **Lowering down to 190 mm** with **axle types BRA 2500/3000/3500** with **swing arm length 200 mm**
- **Lowering down to 210 mm** with **axle types BRA 1800/2500/3000/3500** with **swing arm length 230 mm**

OVERVIEW:

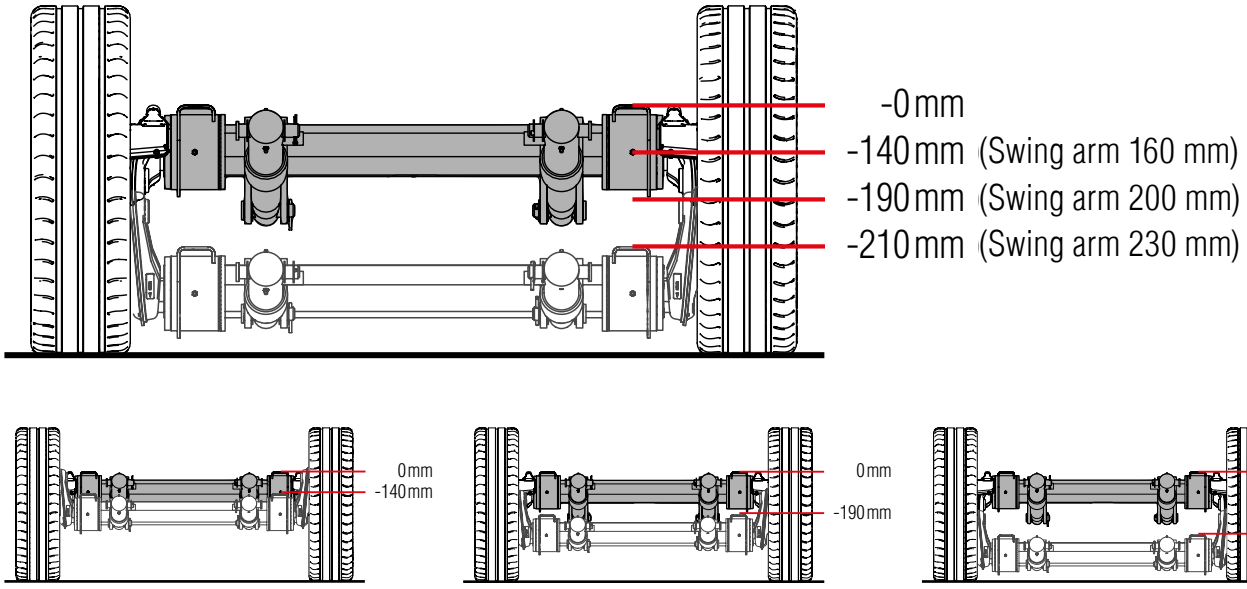

APPLICATION EXAMPLES:

Car transporter trailer

The lower-cost solution "inclined angle or partial lowering down to 140 mm" usually meets the requirements of this target group.

- Simple and low-cost loading and unloading



Sales trailer/commercial trailer

Lowering flat down to the ground is called for here. With 210 mm lowering, the trailer will usually make contact with the road. This means loading is possible quickly and safely with very simple means.

- Sales talks are conducted on an equal footing



LOWERING AXLES

Function

Single axle function
Two hydraulic cylinders are mounted between the axle beam and trailer frame. The axle support blocks are mounted on the axle profile so they can rotate. The axle profile can be lowered or raised with the body by means of a hydraulic pump. The suspension is not impaired during driving.

Tandem axles function
Two hydraulic cylinders are mounted between the front and rear axle profiles.
The axle support blocks are mounted on both axle profiles so they can rotate. Both axle profiles and the body can be lowered or raised using a hydraulic pump. The suspension is not impaired during driving.

The arrangement of hydraulic cylinders in tandem axles also carries out the function of equalising the load between the front and rear axles. Instead of the compensation linkage, the two hydraulic cylinders act when driving, thereby ensuring even load distribution on both axles.





FUNCTIONS

Lowering single / tandem axles
Open valves on the hydraulic pump. The cylinder retracts and the axle profile with body is lowered on both sides by the vehicle's own weight.

Raising single / tandem axles
Operate the hydraulic pump (electric pump/ hand pump). The cylinder extends and the axle profile with body is raised on both sides.



Driving condition



Lowered

MOUNTING

- Axle brackets with rotating mounting.





- Bowden cable outlet 90° (no kinking during lowering procedure). Bowden cable guide welded-on.

LOWERING AXLES DOWN TO 140 MM

Single axle trailer 1,350 kg to 1,500 kg

TECHNOLOGY

Axle type:	BRA 1600-05
	BRA 1600-3
Axle load SA:	1,350 kg / 1,500 kg
Wheel brake:	2051Ab
Wheel connection:	112x5
Wheel bolts:	M12x1.5 ball

SCOPE OF DELIVERY

Included in the scope of delivery:

- Hydraulic cylinder with mounting components
- Adapter bracket single axle loose
- Recovery device
- Compensation profile
- Bowden cables loose
- Wheel bolts loose

SURFACE TREATMENT

- Hot-dip galvanised axle profile
- Wheel brake galvanised

SAP: ACHSE GU BRA GLL EA1350

Part no.	Type	Axle load kg	BC mm	OHF mm	Cylinder spacing mm			
200 572 01	BRA 1600-05	1,350	1,100	1,590	840	88	20	20
200 572 02	BRA 1600-05	1,350	1,200	1,690	940	89	20	20
200 572 03	BRA 1600-05	1,350	1,300	1,790	1,040	90	20	20
200 572 04	BRA 1600-05	1,350	1,400	1,890	1,140	91	20	20
200 572 05	BRA 1600-05	1,350	1,500	1,990	1,240	92	20	20
200 572 06	BRA 1600-05	1,350	1,600	2,090	1,340	93	20	20
200 572 07	BRA 1600-05	1,350	1,700	2,190	1,440	94	20	20
200 572 08	BRA 1600-05	1,350	1,800	2,290	1,540	95	20	20
200 572 09	BRA 1600-05	1,350	1,900	2,390	1,640	96	20	20

SAP: ACHSE GU BRA GLL EA1500

Part no.	Type	Axle load kg	BC mm	OHF mm	Cylinder spacing mm			
200 572 10	BRA 1600-3	1,500	1,100	1,590	840	88	20	20
200 572 11	BRA 1600-3	1,500	1,200	1,690	940	89	20	20
200 572 12	BRA 1600-3	1,500	1,300	1,790	1,040	90	20	20
200 572 13	BRA 1600-3	1,500	1,400	1,890	1,140	91	20	20
200 572 14	BRA 1600-3	1,500	1,500	1,990	1,240	92	20	20
200 572 15	BRA 1600-3	1,500	1,600	2,090	1,340	93	20	20
200 572 16	BRA 1600-3	1,500	1,700	2,190	1,440	94	20	20
200 572 17	BRA 1600-3	1,500	1,800	2,290	1,540	95	20	20
200 572 18	BRA 1600-3	1,500	1,900	2,390	1,640	96	20	20

Only comply with this note if the body width and frame form a perpendicular plane!

If the body is mounted over the wheels, the maximum dimension of 30 mm for the frame must be adhered to!

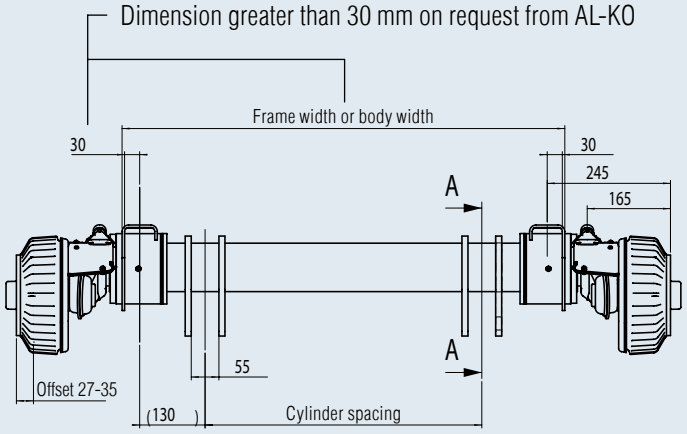

In driving position!

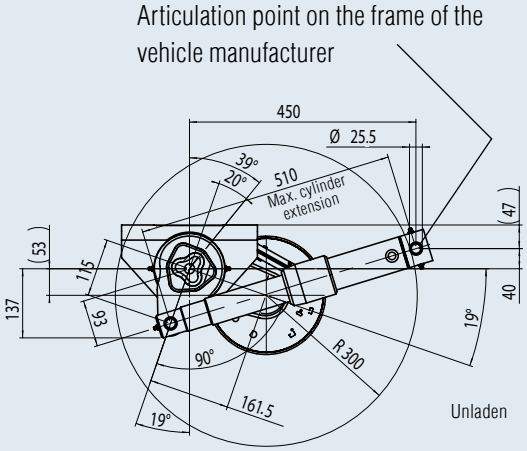

In lowered position!

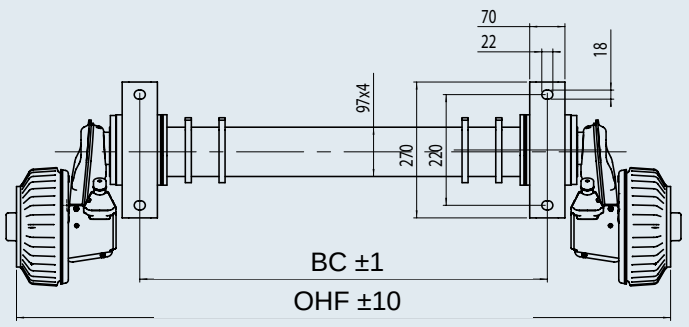

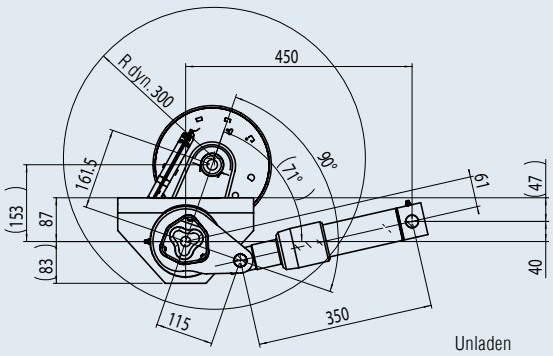

Permitted tyre size min. R stat. 270 mm
The tyre radius must not be less than R stat. 270 mm!

Max. lowering travel approx. 140 mm
Suspension travel approx. 50 mm at 1 x GA

LOWERING AXLES DOWN TO 140 MM

Tandem 2,000 kg to 3,000 kg

TECHNOLOGY

Axle type: BRA 1600-12
BRA 1600-05
BRA 1600-3
Axle load TA: 2,000 kg / 2,700 kg / 3,000 kg
Wheel brake: 2051Ab
Wheel connection: 112x5
Wheel bolts: M12x1.5 ball

SCOPE OF DELIVERY

Included in the scope of delivery:
- Hydraulic cylinder with mounting components
- Adapter bracket tandem loose
- Recovery device
- Compensation profile
- Bowden cables loose
- Wheel bolts loose

SURFACE TREATMENT

- Hot-dip galvanised axle profile
- Wheel brake galvanised

SAP: ACHSE GU BRA GLL TA2000

Part no.	Type	Axle load kg	BC mm	OHF mm	Cylinder spacing mm			
200 572 19	BRA 1600-12	2,000	1,100	1,590	840	152	20	20
200 572 20	BRA 1600-12	2,000	1,200	1,690	940	154	20	20
200 572 21	BRA 1600-12	2,000	1,300	1,790	1,040	156	20	20
200 572 22	BRA 1600-12	2,000	1,400	1,890	1,140	158	20	20
200 572 23	BRA 1600-12	2,000	1,500	1,990	1,240	160	20	20
200 572 24	BRA 1600-12	2,000	1,600	2,090	1,340	162	20	20
200 572 25	BRA 1600-12	2,000	1,700	2,190	1,440	164	20	20
200 572 26	BRA 1600-12	2,000	1,800	2,290	1,540	166	20	20
200 572 27	BRA 1600-12	2,000	1,900	2,390	1,640	168	20	20

Part no.	Type	Axle load kg	BC mm	OHF mm	Cylinder spacing mm			
200 572 28	BRA 1600-05	2,700	1,100	1,590	840	152	20	20
200 572 29	BRA 1600-05	2,700	1,200	1,690	940	154	20	20
200 572 30	BRA 1600-05	2,700	1,300	1,790	1,040	156	20	20
200 572 31	BRA 1600-05	2,700	1,400	1,890	1,140	158	20	20
200 572 32	BRA 1600-05	2,700	1,500	1,990	1,240	160	20	20
200 572 33	BRA 1600-05	2,700	1,600	2,090	1,340	162	20	20
200 572 34	BRA 1600-05	2,700	1,700	2,190	1,440	164	20	20
200 572 35	BRA 1600-05	2,700	1,800	2,290	1,540	166	20	20
200 572 36	BRA 1600-05	2,700	1,900	2,390	1,640	168	20	20

Part no.	Type	Axle load kg	BC mm	OHF mm	Cylinder spacing mm			
200 572 37	BRA 1600-3	3,000	1,100	1,590	840	152	20	20
200 572 38	BRA 1600-3	3,000	1,200	1,690	940	154	20	20
200 572 39	BRA 1600-3	3,000	1,300	1,790	1,040	156	20	20
200 572 40	BRA 1600-3	3,000	1,400	1,890	1,140	158	20	20
200 572 41	BRA 1600-3	3,000	1,500	1,990	1,240	160	20	20
200 572 42	BRA 1600-3	3,000	1,600	2,090	1,340	162	20	20
200 572 43	BRA 1600-3	3,000	1,700	2,190	1,440	164	20	20
200 572 44	BRA 1600-3	3,000	1,800	2,290	1,540	166	20	20
200 572 45	BRA 1600-3	3,000	1,900	2,390	1,640	168	20	20

Only comply with this note if the body width and frame form a perpendicular plane!

If the body is mounted over the wheels, the maximum dimension of 30 mm for the frame must be adhered to!

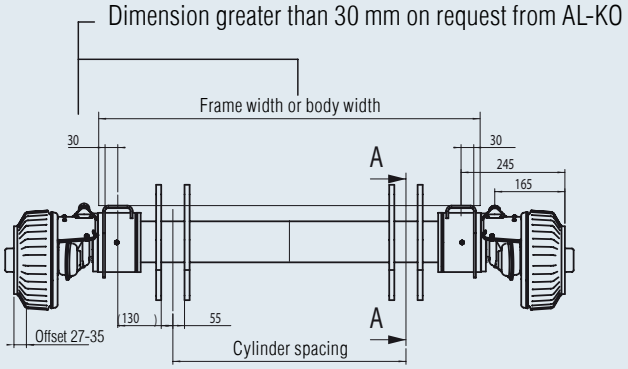

In driving position!

Articulation point on the frame of the vehicle manufacturer

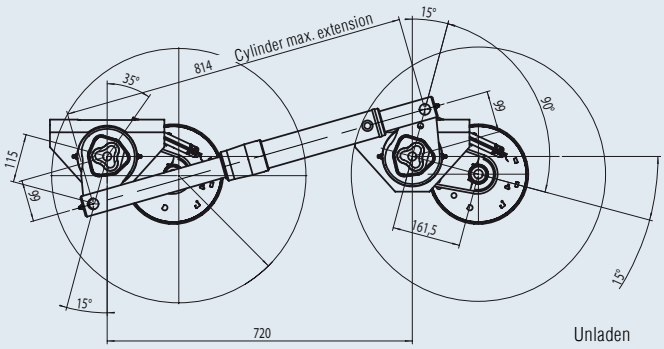

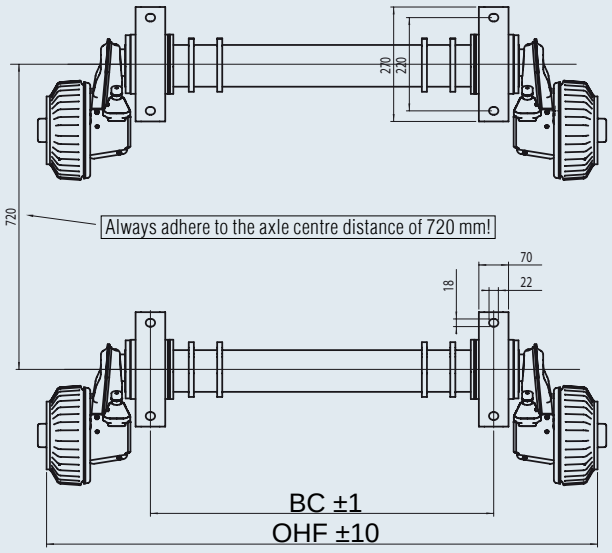

In lowered position!

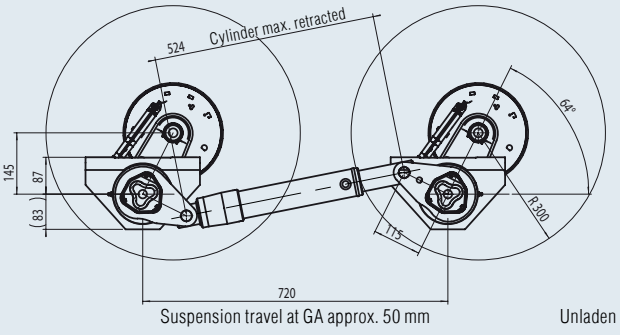

Permitted tyre size min. R stat. 270 mm
The tyre radius must not be less than R stat. 270 mm!

Max. lowering travel approx. 140 mm
Suspension travel approx. 50 mm at 1 x GA

LOWERING AXLES DOWN TO 190 MM

Single axle trailer 2,000 kg to 3,000 kg

TECHNOLOGY

Axle type:	BRA 2500-3 BRA 2500-8 BRA 3000-2
Axle load SA:	2,000 kg / 2,500 kg / 3,000 kg
Wheel brake:	3062
Wheel connection:	205x6
Wheel bolts:	M18x1.5 ball

SCOPE OF DELIVERY

Included in the scope of delivery:

- Hydraulic cylinder with mounting components
- Adapter bracket single axle loose
- Recovery device
- Compensation profile
- Hexagon nut M10
- Ball nut M10
- Bowden cables loose
- Wheel nuts loose

SURFACE TREATMENT

- Hot-dip galvanised axle profile
- Wheel brake black-primed

SAP: ACHSE GU BRA GLL EA2000

Part no.	Type	Axle load kg	BC mm	OHF mm	Cylinder spacing mm			
1 222 255	BRA 2500-3	2,000	1,100	1,665	918	162	10	20
200 556 33	BRA 2500-3	2,000	1,200	1,765	1,018	163	10	20
200 556 34	BRA 2500-3	2,000	1,300	1,865	1,118	164	10	20
200 556 35	BRA 2500-3	2,000	1,400	1,965	1,218	165	10	20
200 556 36	BRA 2500-3	2,000	1,500	2,065	1,318	166	10	20
200 556 37	BRA 2500-3	2,000	1,600	2,165	1,418	167	10	20
200 556 38	BRA 2500-3	2,000	1,700	2,265	1,518	168	10	20
200 556 39	BRA 2500-3	2,000	1,800	2,365	1,618	169	10	20
200 556 40	BRA 2500-3	2,000	1,900	2,465	1,718	170	10	20

SAP: ACHSE GU BRA GLL EA2500

Part no.	Type	Axle load kg	BC mm	OHF mm	Cylinder spacing mm			
1 222 256	BRA 2500-8	2,500	1,100	1,665	918	162	10	20
200 556 41	BRA 2500-8	2,500	1,200	1,765	1,018	163	10	20
200 556 42	BRA 2500-8	2,500	1,300	1,865	1,118	164	10	20
200 556 43	BRA 2500-8	2,500	1,400	1,965	1,218	165	10	20
200 556 44	BRA 2500-8	2,500	1,500	2,065	1,318	166	10	20
200 556 45	BRA 2500-8	2,500	1,600	2,165	1,418	167	10	20
200 556 46	BRA 2500-8	2,500	1,700	2,265	1,518	168	10	20
200 556 47	BRA 2500-8	2,500	1,800	2,365	1,618	169	10	20
200 556 48	BRA 2500-8	2,500	1,900	2,465	1,718	170	10	20

SAP: ACHSE GU BRA GLL EA3000

Part no.	Type	Axle load kg	BC mm	OHF mm	Cylinder spacing mm			
1 222 257	BRA 3000-2	3,000	1,100	1,665	918	162	10	20
200 556 49	BRA 3000-2	3,000	1,200	1,765	1,018	163	10	20
200 556 50	BRA 3000-2	3,000	1,300	1,865	1,118	164	10	20
200 556 51	BRA 3000-2	3,000	1,400	1,965	1,218	165	10	20
200 556 52	BRA 3000-2	3,000	1,500	2,065	1,318	166	10	20
200 556 53	BRA 3000-2	3,000	1,600	2,165	1,418	167	10	20
200 556 54	BRA 3000-2	3,000	1,700	2,265	1,518	168	10	20
200 556 55	BRA 3000-2	3,000	1,800	2,365	1,618	169	10	20
200 556 56	BRA 3000-2	3,000	1,900	2,465	1,718	170	10	20

Only comply with this note if the body width and frame form a perpendicular plane!

If the body is mounted over the wheels, the maximum dimension of 40 mm for the frame must be adhered to!

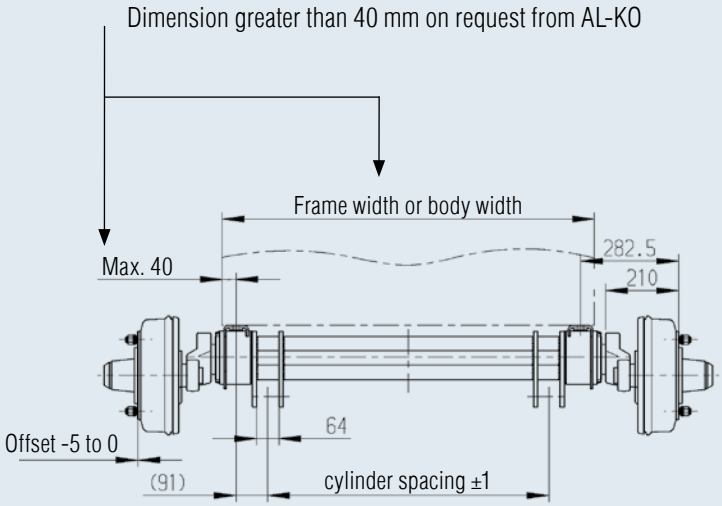

In driving position!
(In unladen condition)
Articulation point on the vehicle manufacturer's frame

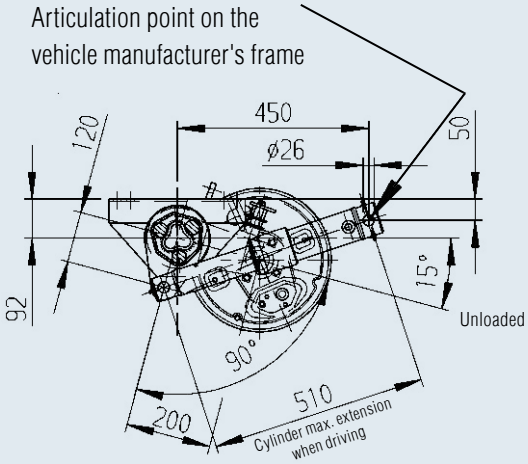

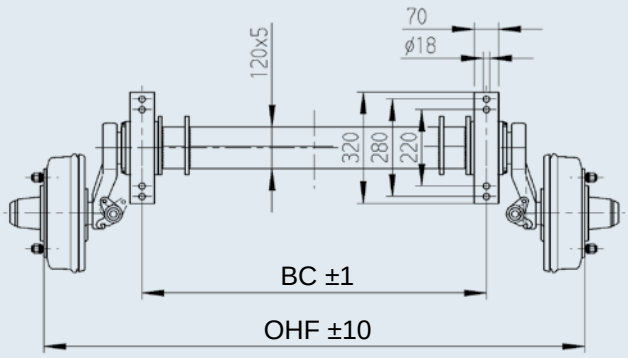

In lowered position!

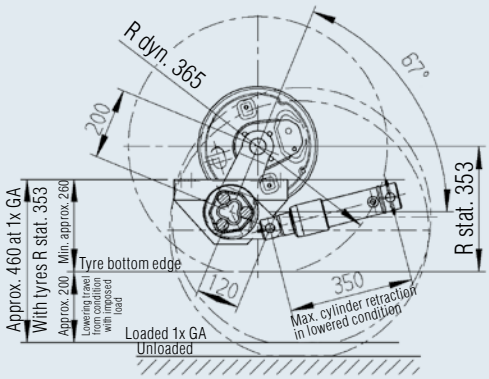

Permitted tyre size min. R stat. 300 mm
The tyre radius must not be less than R stat. 300 mm!
Configure wheel arches according to the tyre size! (Note articulation)

Lowering travel approx. 200 mm

LOWERING AXLES DOWN TO 190 MM

Single axle trailer 3,500 kg

TECHNOLOGY

Model:	Standard - Torsion bar suspension
Axle type:	BT 3500
Axle load SA:	3,500 kg
Wheel brake:	3081 B
Wheel connection:	205x6
Wheel bolts:	M18x1.5 ball

SCOPE OF DELIVERY

Included in the scope of delivery:

- Hydraulic cylinder with mounting components
- Adapter bracket single axle loose
- Recovery device
- Compensation profile
- Hexagon nut M10
- Ball nut M10
- Bowden cables loose
- Wheel nuts loose

SURFACE TREATMENT

- Hot-dip galvanised axle profile
- Wheel brake black-primed

SAP: ACHSE ST BRA GRM EA3500

Part no.	Type	Axle load kg	BC mm	OHF mm	Cylinder spacing mm			
1 222 258	BRA 3500	3,500	1,100	1,640	891	214	10	20
200 556 57	BRA 3500	3,500	1,200	1,740	991	215	10	20
200 556 58	BRA 3500	3,500	1,300	1,840	1,091	216	10	20
200 556 59	BRA 3500	3,500	1,400	1,940	1,191	217	10	20
200 556 60	BRA 3500	3,500	1,500	2,040	1,291	218	10	20
200 556 61	BRA 3500	3,500	1,600	2,140	1,391	219	10	20
200 556 62	BRA 3500	3,500	1,700	2,240	1,491	220	10	20
200 556 63	BRA 3500	3,500	1,800	2,340	1,591	221	10	20
200 556 64	BRA 3500	3,500	1,900	2,440	1,691	222	10	20

Only comply with this note if the body width and frame form a perpendicular plane!

If the body is mounted over the wheels, the maximum dimension of 40 mm for the frame must be adhered to!

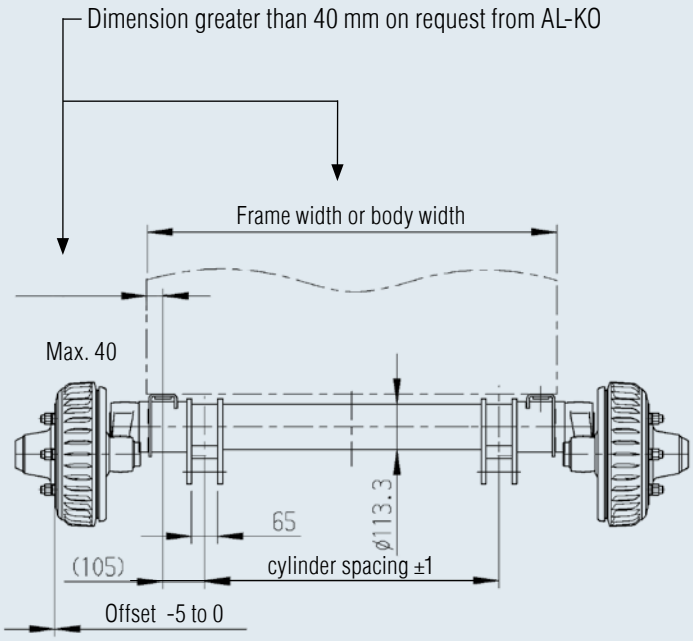

In driving position!
(In unladen condition)
Articulation point on the vehicle manufacturer's frame

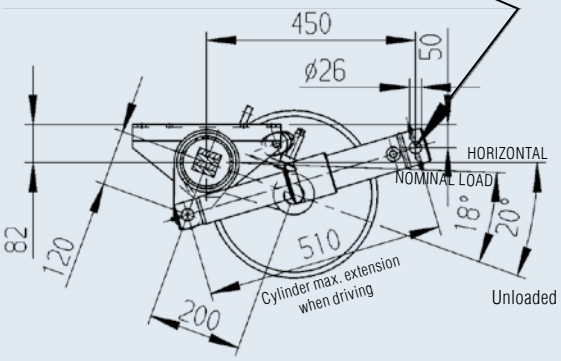

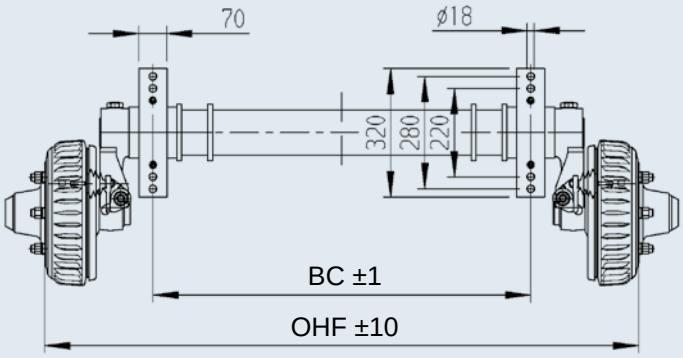

In lowered position!

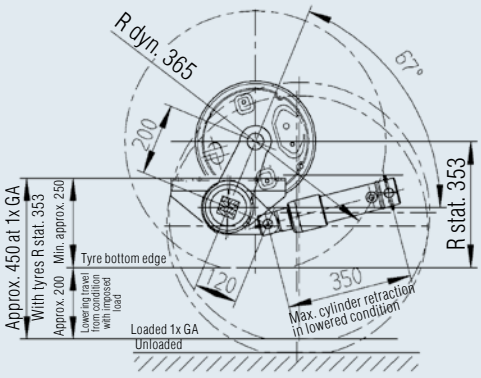

Permitted tyre size min. R stat. 300 mm
The tyre radius must not be less than R stat. 300 mm!
Configure wheel arches according to the tyre size! (Note articulation)

Lowering travel approx. 200 mm

LOWERING AXLES DOWN TO 210 MM

Single axle trailer 1,350 kg to 1,500 kg

TECHNOLOGY

Axle type:	BRA 1800-01
	BRA 1800-3
Axle load SA:	1,350 kg / 1,500 kg
Wheel brake:	2051Ab
Wheel connection:	112x5
Wheel bolts:	M12x1.5 ball

SCOPE OF DELIVERY

Included in the scope of delivery:

- Hydraulic cylinder with mounting components
- Adapter bracket single axle loose
- Recovery device
- Compensation profile
- Bowden cables loose
- Wheel bolts loose

SURFACE TREATMENT

- Hot-dip galvanised axle profile
- Wheel brake black powder-coated

SAP: ACHSE GU BRA GLL EA1300

Part no.	Type	Axle load kg	BC mm	OHF mm	Cylinder spacing mm			
1 222 251	BRA 1800-01	1,350	1,100	1,650	840	108	20	20
200 556 01	BRA 1800-01	1,350	1,200	1,750	940	109	20	20
200 556 02	BRA 1800-01	1,350	1,300	1,850	1,040	110	20	20
200 556 03	BRA 1800-01	1,350	1,400	1,950	1,140	111	20	20
200 556 04	BRA 1800-01	1,350	1,500	2,050	1,240	112	20	20
200 556 05	BRA 1800-01	1,350	1,600	2,150	1,340	113	20	20
200 556 06	BRA 1800-01	1,350	1,700	2,250	1,440	114	20	20
200 556 07	BRA 1800-01	1,350	1,800	2,350	1,540	115	20	20
200 556 08	BRA 1800-01	1,350	1,900	2,450	1,640	116	20	20

SAP: ACHSE GU BRA GLL EA1500

Part no.	Type	Axle load kg	BC mm	OHF mm	Cylinder spacing mm			
1 222 252	BRA 1800-3	1,500	1,100	1,650	840	108	20	20
200 556 09	BRA 1800-3	1,500	1,200	1,750	940	109	20	20
200 556 10	BRA 1800-3	1,500	1,300	1,850	1,040	110	20	20
200 556 11	BRA 1800-3	1,500	1,400	1,950	1,140	111	20	20
200 556 12	BRA 1800-3	1,500	1,500	2,050	1,240	112	20	20
200 556 13	BRA 1800-3	1,500	1,600	2,150	1,340	113	20	20
200 556 14	BRA 1800-3	1,500	1,700	2,250	1,440	114	20	20
200 556 15	BRA 1800-3	1,500	1,800	2,350	1,540	115	20	20
200 556 16	BRA 1800-3	1,500	1,900	2,450	1,640	116	20	20

Only comply with this note if the body width and frame form a perpendicular plane!

If the body is mounted over the wheels, the maximum dimension of 30 mm for the frame must be adhered to!

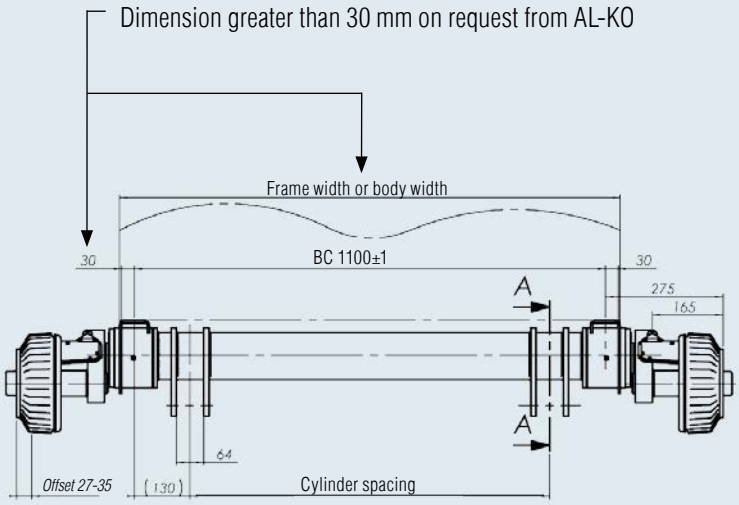

In driving position!

Articulation point on the vehicle manufacturer's frame

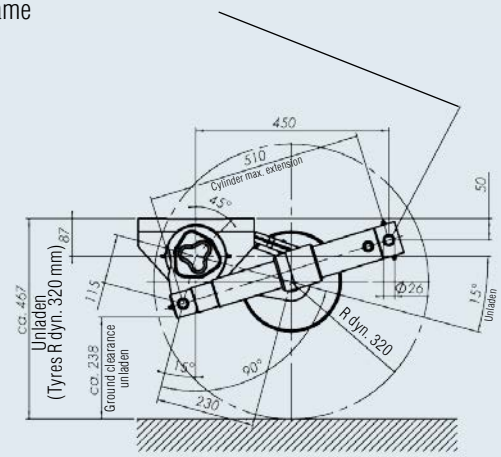

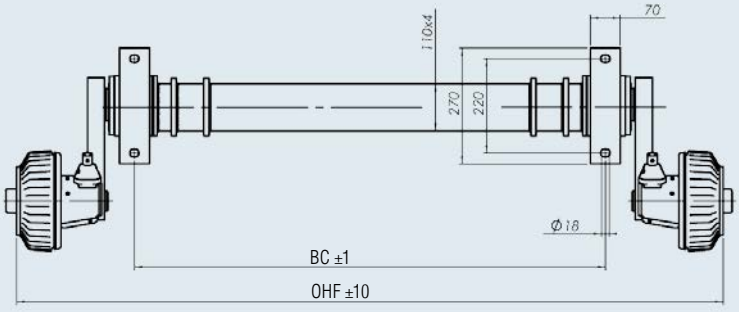

In lowered position!

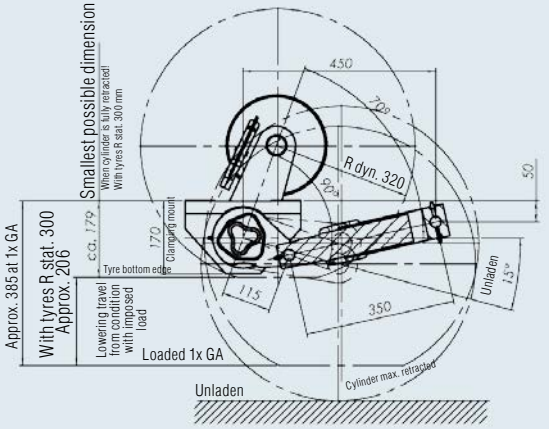

Permitted tyre size min. R stat. 300 mm

The tyre radius must not be less than R stat. 300 mm!

Max. lowering travel approx. 210 mm

Suspension travel approx. 50 mm at 1 x GA

LOWERING AXLES DOWN TO 210 MM

Single axle trailer 1,600 kg to 1,800 kg

TECHNOLOGY

Axle type:	BRA 1800-5
	BRA 1800-9
Axle load SA:	1,600 kg / 1,800 kg
Wheel brake:	3062 / 3081
Wheel connection:	112x5
Wheel bolts:	M12x1.5 ball

SCOPE OF DELIVERY

Included in the scope of delivery:

- Hydraulic cylinder with mounting components
- Adapter bracket single axle loose
- Recovery device
- Compensation profile
- Bowden cables loose
- Wheel bolts loose

SURFACE TREATMENT

- Hot-dip galvanised axle profile
- Wheel brake black powder-coated

SAP: ACHSE GU BRA GLL EA1600

Part no.	Type	Axle load kg	BC mm	OHF mm	Cylinder spacing mm			
1 222 253	BRA 1800-5	1,600	1,100	1,650	840	110	20	20
200 556 17	BRA 1800-5	1,600	1,200	1,750	940	111	20	20
200 556 18	BRA 1800-5	1,600	1,300	1,850	1,040	112	20	20
200 556 19	BRA 1800-5	1,600	1,400	1,950	1,140	113	20	20
200 556 20	BRA 1800-5	1,600	1,500	2,050	1,240	114	20	20
200 556 21	BRA 1800-5	1,600	1,600	2,150	1,340	115	20	20
200 556 22	BRA 1800-5	1,600	1,700	2,250	1,440	116	20	20
200 556 23	BRA 1800-5	1,600	1,800	2,350	1,540	117	20	20
200 556 24	BRA 1800-5	1,600	1,900	2,450	1,640	118	20	20

SAP: ACHSE GU BRA GLL EA1800

Part no.	Type	Axle load kg	BC mm	OHF mm	Cylinder spacing mm			
1 222 254	BRA 1800-9	1,800	1,100	1,650	840	110	20	20
200 556 25	BRA 1800-9	1,800	1,200	1,750	940	111	20	20
200 556 26	BRA 1800-9	1,800	1,300	1,850	1,040	112	20	20
200 556 27	BRA 1800-9	1,800	1,400	1,950	1,140	113	20	20
200 556 28	BRA 1800-9	1,800	1,500	2,050	1,240	114	20	20
200 556 29	BRA 1800-9	1,800	1,600	2,150	1,340	115	20	20
200 556 30	BRA 1800-9	1,800	1,700	2,250	1,440	116	20	20
200 556 31	BRA 1800-9	1,800	1,800	2,350	1,540	117	20	20
200 556 32	BRA 1800-9	1,800	1,900	2,450	1,640	118	20	20

Only comply with this note if the body width and frame form a perpendicular plane!

If the body is mounted over the wheels, the maximum dimension of 30 mm for the frame must be adhered to!

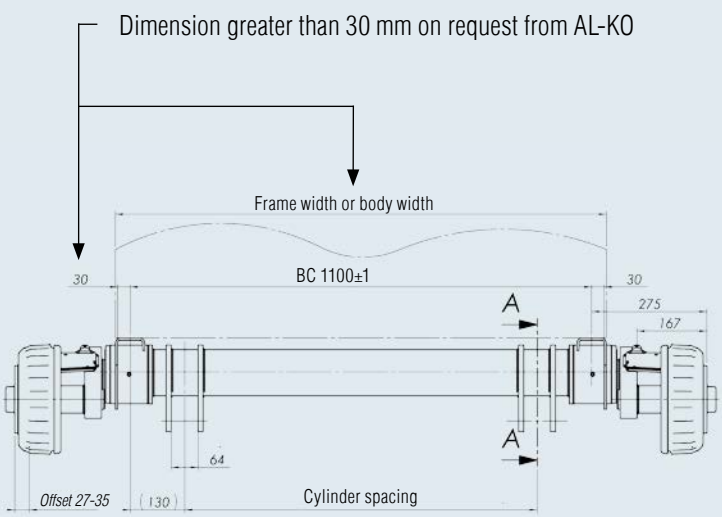

In driving position!

Articulation point on the vehicle manufacturer's frame

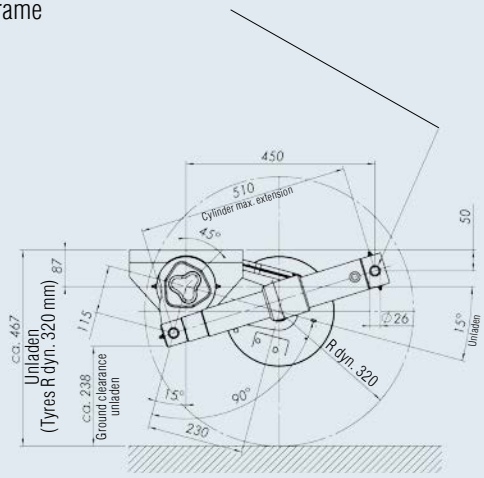

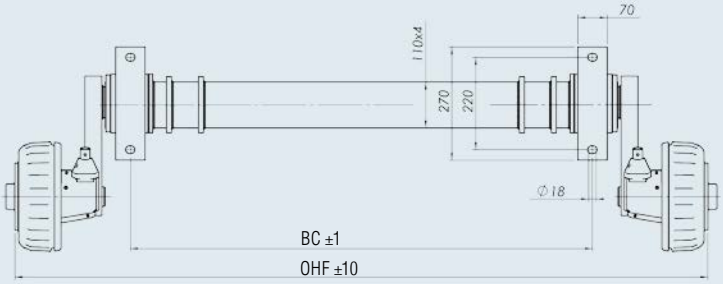

In lowered position!

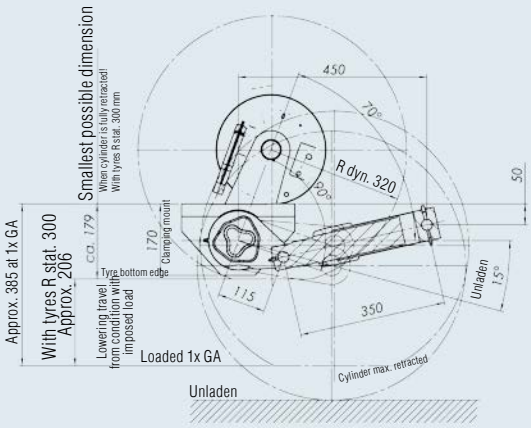

Permitted tyre size min. R stat. 300 mm

The tyre radius must not be less than R stat. 300 mm!

Max. lowering travel approx. 210 mm

Suspension travel approx. 50 mm at 1 x GA

LOWERING AXLES DOWN TO 210 MM

Tandem 2,000 kg to 3,000 kg

TECHNOLOGY

Axle type:	BRA 1800-07 BRA 1800-01 BRA 1800-3
Axle load TA:	2,000 kg / 2,600 kg / 3,000 kg
Wheel brake:	2051Ab
Wheel connection:	112x5
Wheel bolts:	M12x1.5 ball

SCOPE OF DELIVERY

Included in the scope of delivery:

- Hydraulic cylinder with mounting components
- Adapter bracket tandem loose
- Recovery device
- Compensation profile
- Hexagon nut M8
- Ball nut M8
- Bowden cables loose
- Wheel bolts loose

SURFACE TREATMENT

- Hot-dip galvanised axle profile
- Wheel brake black powder-coated

SAP: ACHSE GU BRA GLL TA2000

Part no.	Type	Axle load kg	BC mm	OHF mm	Cylinder spacing mm			
1 222 259	BRA 1800-07	2,000	1,100	1,650	840	192	20	20
200 556 65	BRA 1800-07	2,000	1,200	1,750	940	194	20	20
200 556 66	BRA 1800-07	2,000	1,300	1,850	1,040	196	20	20
200 556 67	BRA 1800-07	2,000	1,400	1,950	1,140	198	20	20
200 556 68	BRA 1800-07	2,000	1,500	2,050	1,240	200	20	20
200 556 69	BRA 1800-07	2,000	1,600	2,150	1,340	202	20	20
200 556 70	BRA 1800-07	2,000	1,700	2,250	1,440	204	20	20
200 556 71	BRA 1800-07	2,000	1,800	2,350	1,540	206	20	20
200 556 72	BRA 1800-07	2,000	1,900	2,450	1,640	208	20	20

Part no.	Type	Axle load kg	BC mm	OHF mm	Cylinder spacing mm			
1 222 260	BRA 1800-01	2,600	1,100	1,650	840	192	20	20
200 556 73	BRA 1800-01	2,600	1,200	1,750	940	194	20	20
200 556 74	BRA 1800-01	2,600	1,300	1,850	1,040	196	20	20
200 556 75	BRA 1800-01	2,600	1,400	1,950	1,140	198	20	20
200 556 76	BRA 1800-01	2,600	1,500	2,050	1,240	200	20	20
200 556 77	BRA 1800-01	2,600	1,600	2,150	1,340	202	20	20
200 556 78	BRA 1800-01	2,600	1,700	2,250	1,440	204	20	20
200 556 79	BRA 1800-01	2,600	1,800	2,350	1,540	206	20	20
200 556 80	BRA 1800-01	2,600	1,900	2,450	1,640	208	20	20

Part no.	Type	Axle load kg	BC mm	OHF mm	Cylinder spacing mm			
1 222 261	BRA 1800-3	3,000	1,100	1,650	840	192	20	20
200 556 81	BRA 1800-3	3,000	1,200	1,750	940	194	20	20
200 556 82	BRA 1800-3	3,000	1,300	1,850	1,040	196	20	20
200 556 83	BRA 1800-3	3,000	1,400	1,950	1,140	198	20	20
200 556 84	BRA 1800-3	3,000	1,500	2,050	1,240	200	20	20
200 556 85	BRA 1800-3	3,000	1,600	2,150	1,340	202	20	20
200 556 86	BRA 1800-3	3,000	1,700	2,250	1,440	204	20	20
200 556 87	BRA 1800-3	3,000	1,800	2,350	1,540	206	20	20
200 556 88	BRA 1800-3	3,000	1,900	2,450	1,640	208	20	20

Only comply with this note if the body width and frame form a perpendicular plane!

If the body is mounted over the wheels, the maximum dimension of 30 mm for the frame must be maintained!

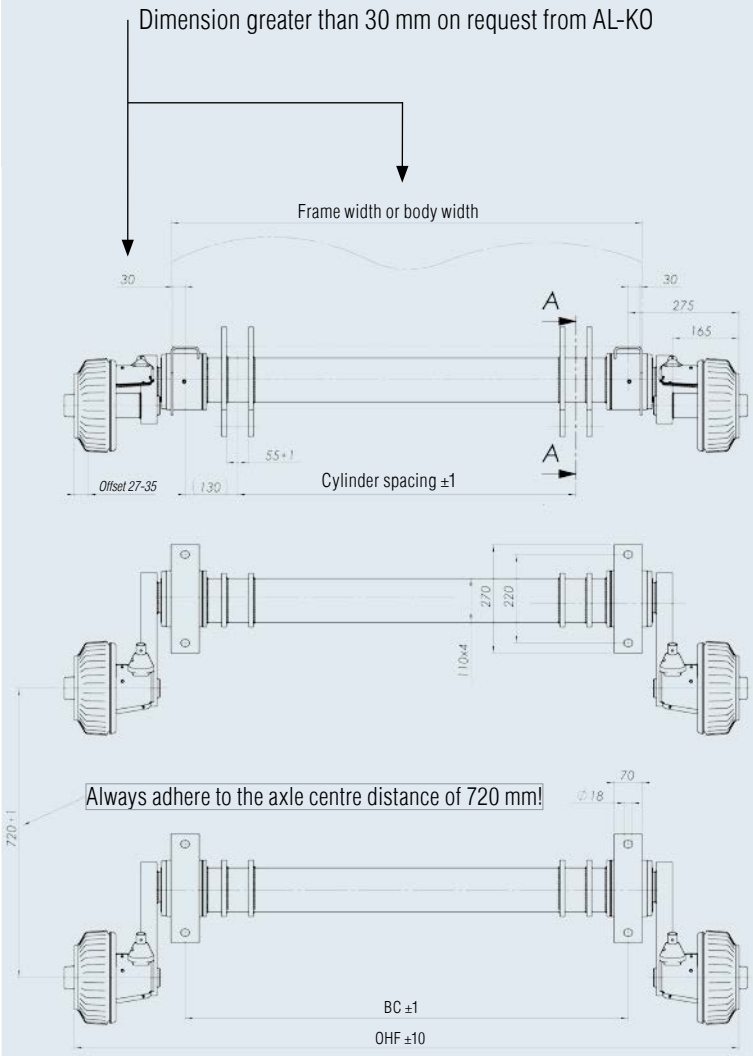

In driving position!

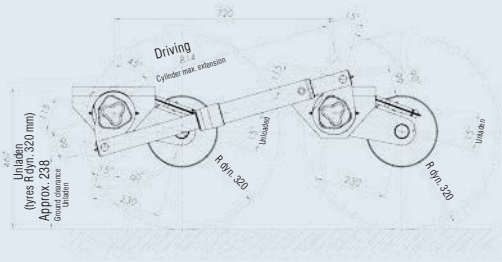

In lowered position!

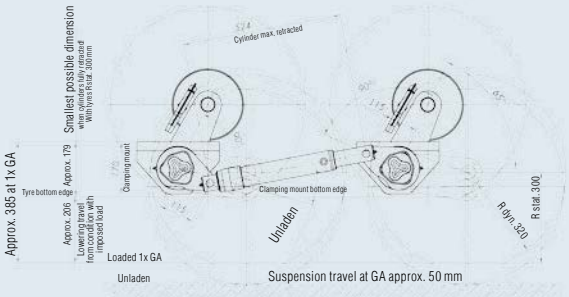

Permitted tyre size min. R stat. 300 mm

The tyre radius must not be less than R stat. 300 mm!

Configure wheel arches according to the tyre size! (Note articulation)

Lowering travel approx. 210 mm

LOWERING AXLES DOWN TO 210 MM

Tandem 3,500 kg

TECHNOLOGY

Axle type:	BRA 1800-9
Axle load TA:	3,500 kg
Wheel brake:	2361
Wheel connection:	112x5
Wheel bolts:	M12x1.5 ball

SCOPE OF DELIVERY

Included in the scope of delivery:

- Hydraulic cylinder with mounting components
- Adapter bracket tandem loose
- Recovery device
- Compensation profile
- Hexagon nut M8
- Ball nut M8
- Bowden cables loose
- Wheel bolts loose

SURFACE TREATMENT

- Hot-dip galvanised axle profile
- Wheel brake black powder-coated

SAP: ACHSE GU BRA GLL TA3500

Part no.	Type	Axle load kg	BC mm	OHF mm	Cylinder spacing mm			
1 222 262	BRA 1800-9	3,500	1,100	1,650	840	196	10	20
200 556 89	BRA 1800-9	3,500	1,200	1,750	940	198	10	20
200 556 90	BRA 1800-9	3,500	1,300	1,850	1,040	200	10	20
200 556 91	BRA 1800-9	3,500	1,400	1,950	1,140	202	10	20
200 556 92	BRA 1800-9	3,500	1,500	2,050	1,240	204	10	20
200 556 93	BRA 1800-9	3,500	1,600	2,150	1,340	206	10	20
200 556 94	BRA 1800-9	3,500	1,700	2,250	1,440	208	10	20
200 556 95	BRA 1800-9	3,500	1,800	2,350	1,540	210	10	20
200 556 96	BRA 1800-9	3,500	1,900	2,450	1,640	212	10	20

Only comply with this note if the body width and frame form a perpendicular plane!

If the body is mounted over the wheels, the maximum dimension of 30 mm for the frame must be maintained!

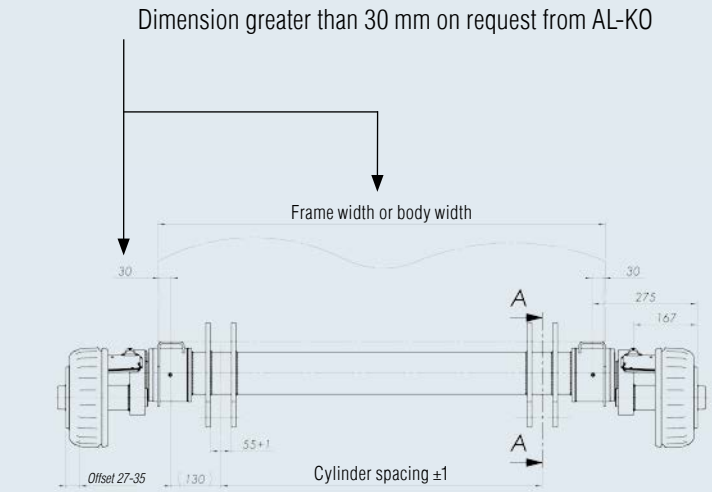

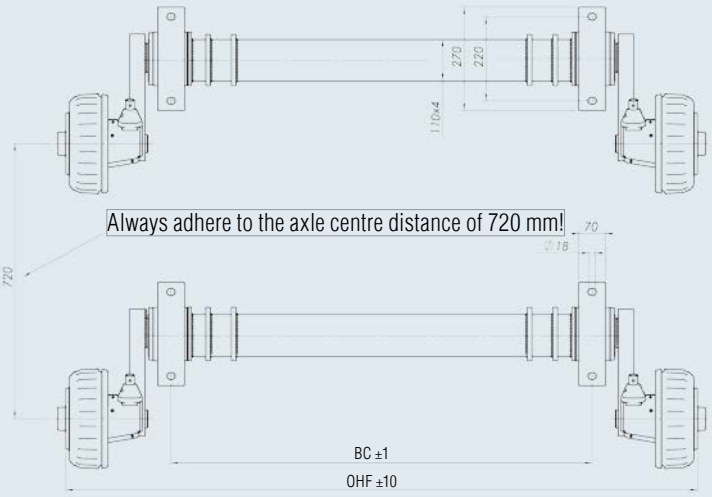

In driving position!

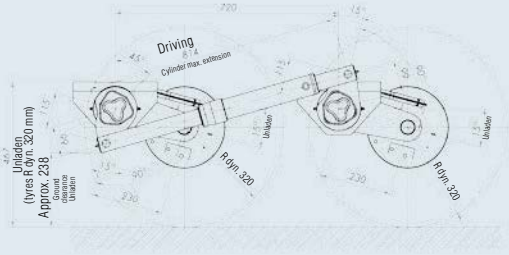

In lowered position!

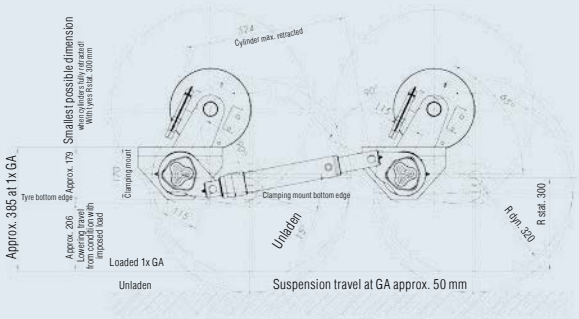

Permitted tyre size min. R stat. 300 mm

The tyre radius must not be less than R stat. 300 mm!

Configure wheel arches according to the tyre size! (Note articulation)

Lowering travel approx. 210 mm

LOWERING AXLES – up to 270 mm

Single axle trailer up to 1,800 kg, tandem up to 3,500 kg

YOUR ADVANTAGE

- **Lowering level with the ground down to 270 mm from the bottom edge of the frame to the ground**
  The effective entry height (drive-on height) in the lowered condition is identical to the frame height of the trailer (it is essential to comply with installation guidelines.

- **Optional raising on one or both sides**
  The trailer can be lifted either on one or both sides.

  Example:
  A sales trailer should be parked partially on the footpath and partially on the road:
  The trailer is completely lowered and is in contact with the footpath. Due to the height difference between the footpath and the road surface, the trailer is at an angle. By raising on one side on the road surface side, the trailer can be returned to the horizontal.

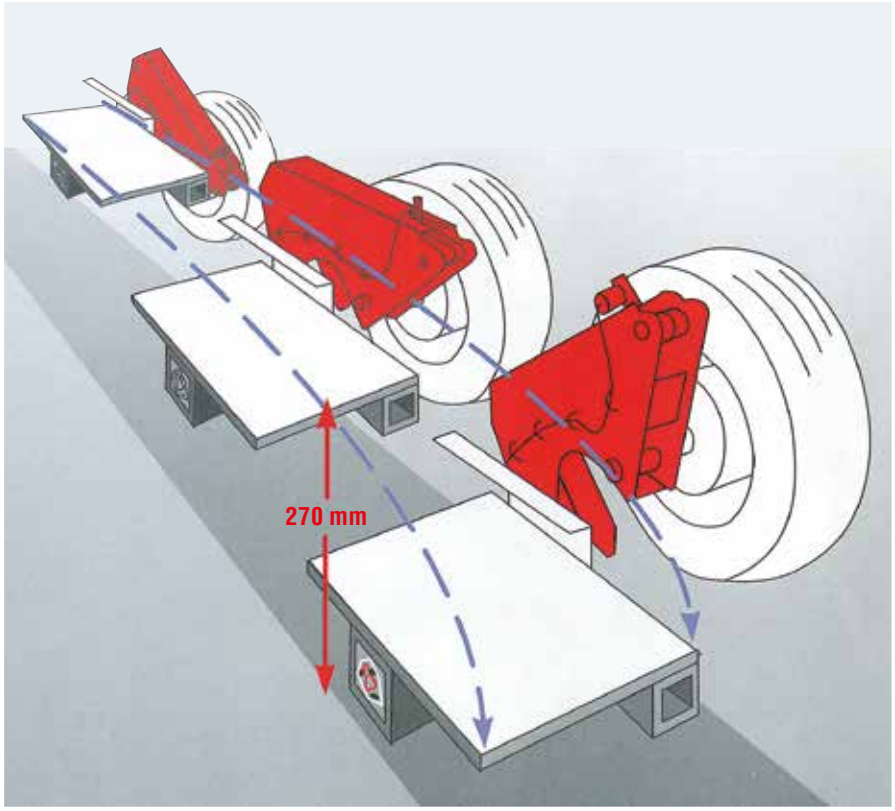

- **Variable body widths available from stock**
  By using half axles screwed into the trailer frame, it is possible to produce variable bodies with one axle. (Comply with installation notes) We stock these half axles using our warehouse system

- **The Bowden cable outlet at the wheel brake is deflected by 90° to the front using a relay lever. This means the Bowden cable can be damaged when raising and lowering.**

Function

A special lowering mechanism with integrated hydraulic cylinder operate between the wheel and axle profile.
Using a special pump unit with remote control, the wheels can be activated as follows:

- Lowering together, i.e. all wheels at once
- Lifting together or alternatively with right wheels separate from left wheels

Driving condition

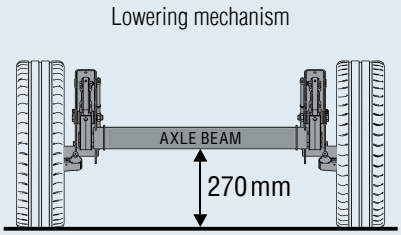

Lowering level with the ground

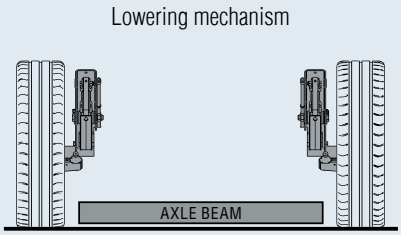

Raising on one and both sides

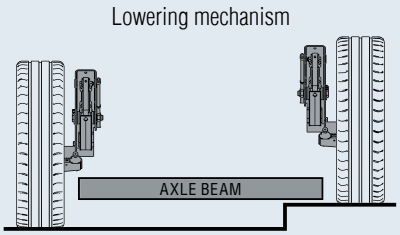



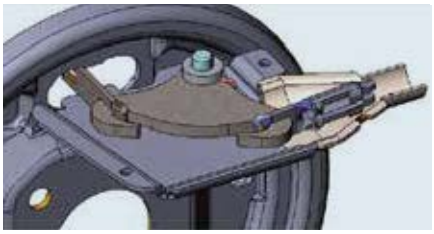

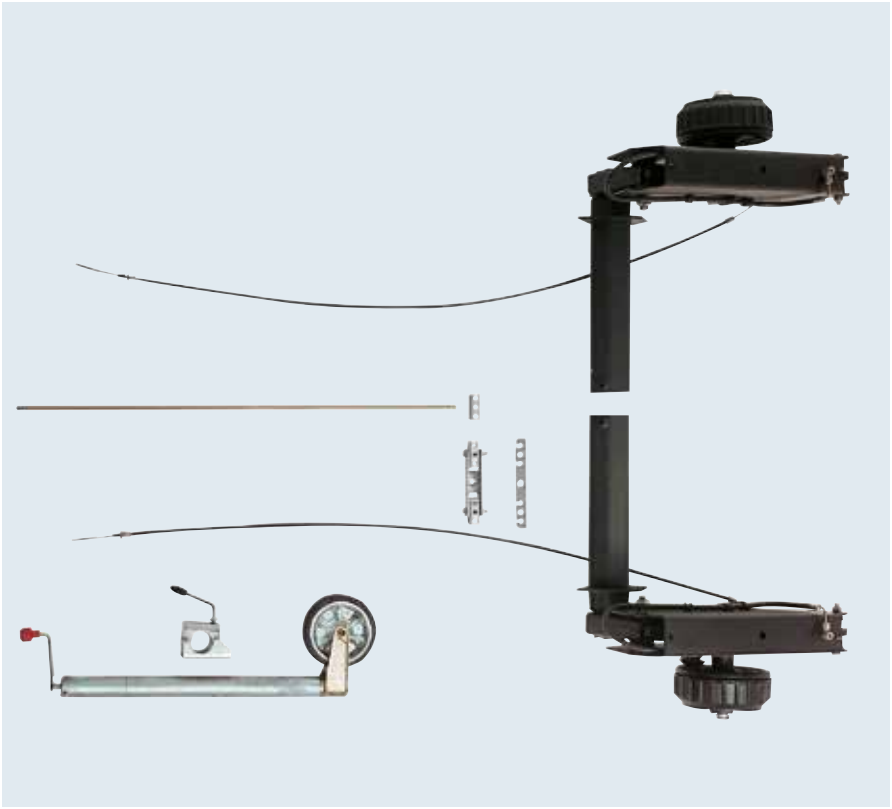

Sample applications

Your customers want space-saving,
cost-effective and practical solutions

- Simple and low-cost loading and unloading



- Sales talks are conducted on an equal footing



LOWERING AXLES DOWN TO 270 MM

Single axle trailer up to 1,800 kg, tandem up to 3,500 kg

Type overview / purchase order items

Single axle trailer

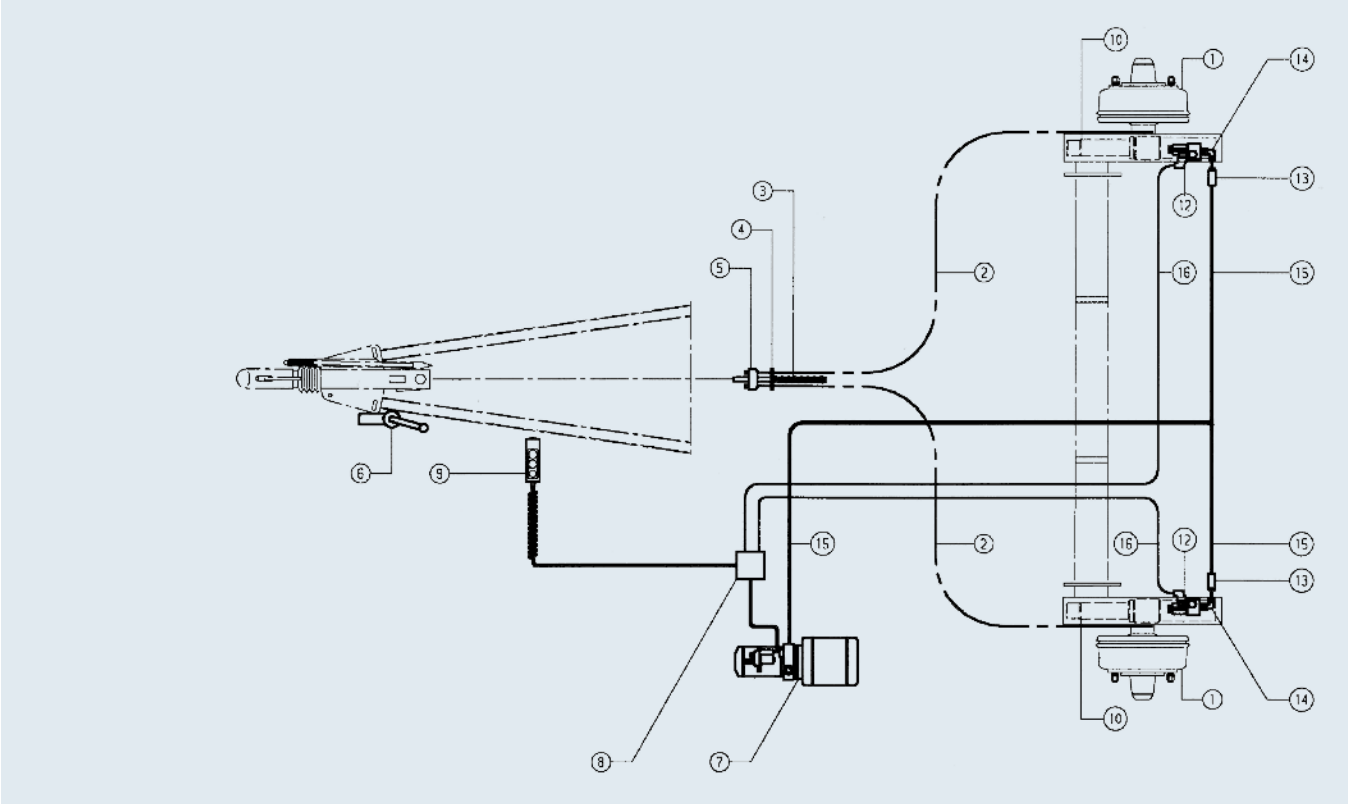

Tandem

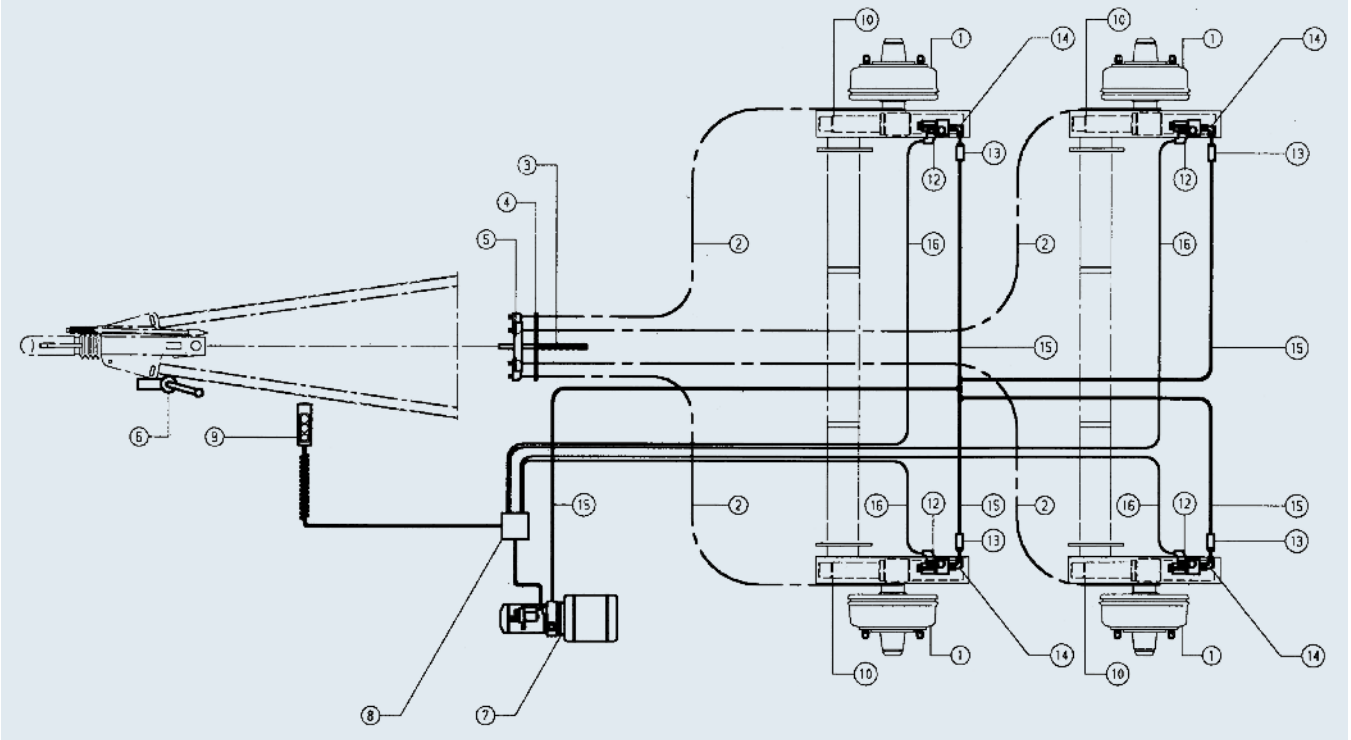

MOUNTING

1. Hydraulic unit with remote control

The pump unit must be protected against misuse by a lockable housing.
We recommend using the hydraulic components that we propose. These components have been tested by us, found to be good and approved.

2. Axles

- AL-KO axles have a toe-in, which means they must be installed trailing.
- Please comply with our installation notes without fail (wheel arch clearances, screw connection to the frame, mounting options for the axle profile, etc.)
- The half axles are screwed into the customer's own frame. The vehicle builder fills the hydraulic system with hydraulic oil and bleeds it.

3. Jockey wheel mounting

- In lowered condition, the lowest point is the bottom edge of the frame. Please note this in your jockey wheel mounting (as high as possible).
- The jockey wheel or the support fixture is included in the lowering procedure, so a particularly stable version should be used here.

We recommend for this:
Jockey wheel
Part no. 243 888 – 500 kg
with clamp 60 Ø
Part no. 249 859 – 500 kg
(stat. carrying force.)

IMPORTANT!
If the lowering axle is configured as a half axle, the track and camber values must particularly be taken into considered during installation!

The following values must be complied with:
Toe-in: + 20' ± 10'
Camber: + 1° 10' ± 10'
Measured unladen!

A warning notice must be attached on all sides of the trailer. For example:

"Important! Trailer moves down!"

Mounting recommendation for the axle profile
Transverse screw connection with one bolt M12 - 8.8. Flange plate with four bolts (optionally six) M12 - 8.8
(Tightening torque for bolt M12 = 80 to 85 Nm).

IMPORTANT!
Provide spacer sleeves if using hollow sections as the frame.

Cross member 120 x 120 x 4 – shorten distance!

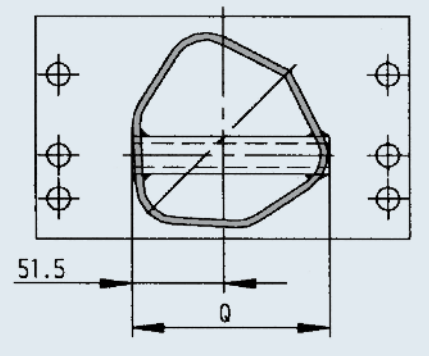

140 x 140 x 5 (standard)

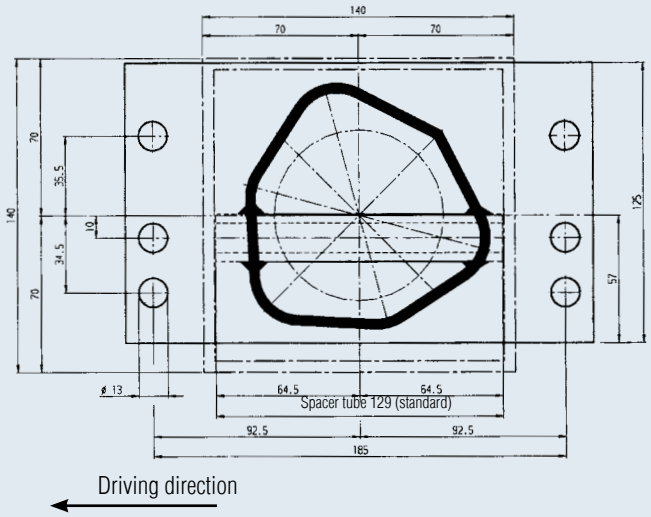

☐120 x 120 x 4 (shorten distance!)

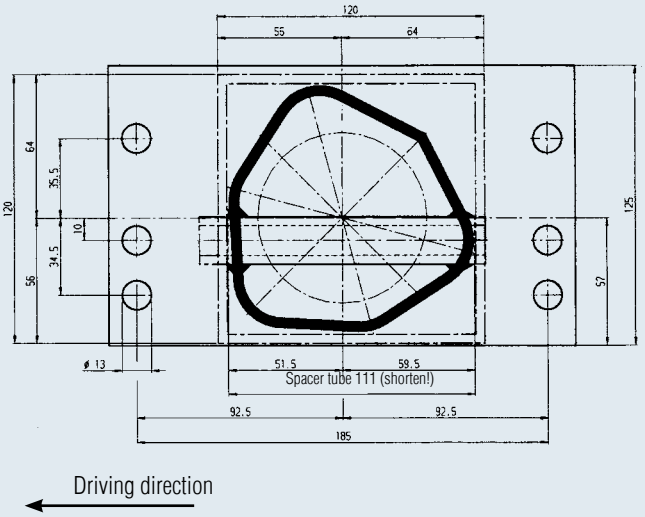

LOWERING AXLES DOWN TO 270 MM

Single axle trailer up to 1,800 kg, tandem up to 3,500 kg

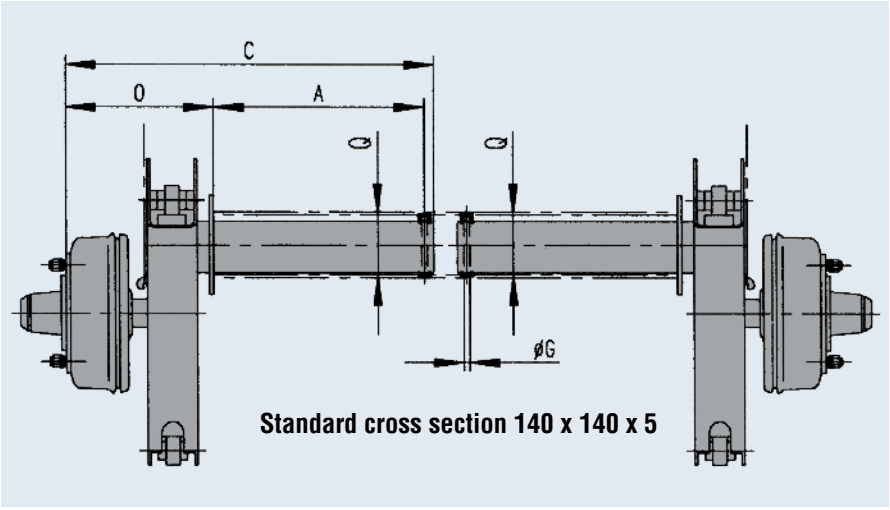

Standard cross section 140 x 140 x 5

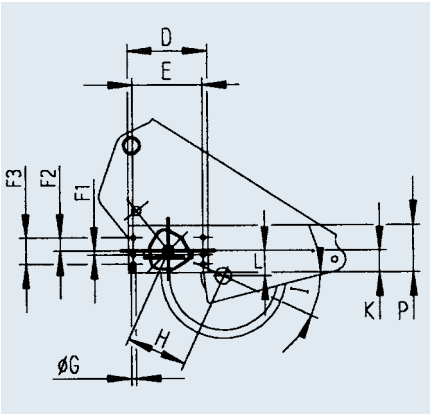

SURFACE TREATMENT
Synthetic resin dip-priming black

Supplier of hydraulic and control components:
Hydro-compact unit ⑦
Control box ⑧
Remote control ⑨
Quantity controller ⑬

Order directly from:
Stiefel GmbH
Dr.-Carl-Schwenk-Straße 16
D-89233 Neu-Ulm, Burlafingen
Tel. 0731 / 7173-0
Fax 0731 / 7173-41
E-mail: info@stiefel.de

Stiefel purchase part number:
100 196 635

(of the complete set with contained items ⑦ ⑧ ⑨ ⑬)
If further hydraulic hoses are required, these can be ordered from Stiefel in addition.

ONLY AVAILABLE IN GERMANY

SAP: ACHSE GU ASB GRM HA1750

Type overview - lowering axle ①

Type	Part no.	Permitted axle load kg	Axle dimensions (mm) BC A	OHF C	Clamping mount M	Cylinder N	Screw-in pipe O	Rims and tyres Wheel brake	Wheel connection	Wheel bolt	Offset from/to	Rec. rims	Rec. tyres
ASB1800	249 416	SA=1,800 TA=3,500	449	783	–	–	316	2361	112x5	M12x1.5 ball	30 mm	6J x 14	205 R 14 C*

* Note tyre size: maximum tyre width 215 mm

Type overview - accessories

Type	Long-life Bowden cables - single axle/tandem front axle Part no.	Sleeve mm H	Cable mm S ②	Long-life- Bowden cables - tandem rear axle Part no.	Sleeve mm H	Cable mm S ②	Recovery device Part no. ③
ASB1800	247 290	1,729	1,985	1 231 585	2800	3005	288 675 (for M10) 288 676 (for M12)

Type and supplier overview hydraulic system

For axle Type	Hydro-compact unit Supplier ⑦	Part no.	Control box (diode module) Supplier ⑧	Part no.	Switch box (remote control) Supplier ⑨	Part no.	Hydraulic cylinder Supplier ⑩	Part no.	Mounting components Hydraulic cylinder (per cylinder) ⑪
ASB1800 half axle	Stiefel	100 196 636	Stiefel	100 196 637	Stiefel	100 196 638	In scope of delivery		In scope of delivery

SCOPE OF DELIVERY

(See type overview, please order)

	Req. order quantity SA	TA
① Half axle ASB 1800 can be used both as a single or tandem axle incl. mounted hydraulic cylinder see no. 10, incl. electrically unlocking solenoid valve see no. 12, incl. angled screw connection see no. 14, incl. hydraulic hose see no. 15.	1x	2x
② Bowden cables for this single axle or tandem	2x	4x
③ Recovery device single axle or tandem	1x	1x
④ Adapter bracket for this single axle or tandem	1x	1x
⑤ Compensation profile for this single axle or tandem	1x	1x
⑥ Jockey wheel	1x	1x
⑦ Hydro-compact unit (not supplied by AL-KO)	1x	1x
⑧ Control box (not supplied by AL-KO)	1x	1x
⑨ Switch box (not supplied by AL-KO)	1x	1x
⑩+⑪ Hydraulic cylinder	–	–
⑫ Solenoid valve	–	–
⑬ Quantity controller (not supplied by AL-KO)	2x	4x
⑭ Angled screw connection	–	–
⑮ Hydraulic hose	–	–
⑯ Control cable (not supplied by AL-KO)	2x	2x

Wheel arch clearances

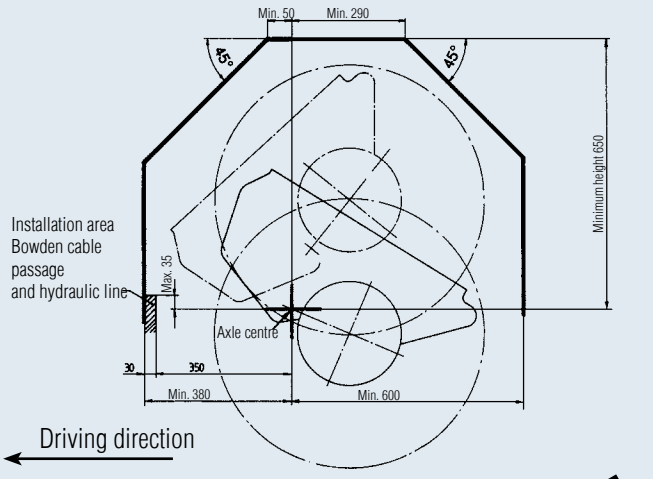

Recovery device

Part no. 288 675 (M10) up to 2,500 kg Part no. 288 676 (M12) up to 3,500 kg

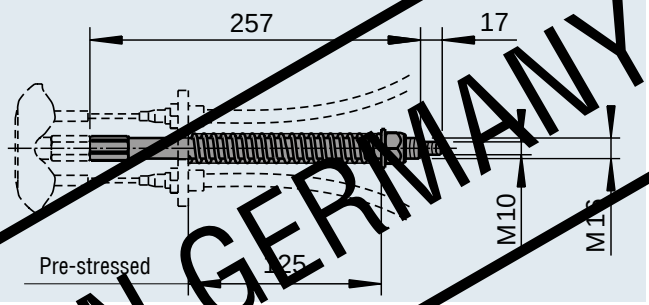

Type overview - lowering axle ①

Clamping mount/connection plate (mm)								Spacer bush (mm)	Swing arm (mm)			Axle profile (mm)	Minimum axle dimensions (min. mm)	
D	E	F_1	F_2	F_3	Ø G	K	P		H	I	L			
210	185	40	35.5	70	16	57	125	129**	160	25°	68	110	–	145

** With standard cross section 140x140x5. For cross section 120x80x4 shortened to 111mm.

Type overview - accessories

Bowden cable adapter bracket Part no. single axle	Tandem ④	Compensation profile part no. Single axle	Tandem ⑤	Jockey wheel + clamp Part no.	Ø tube	Clamp	Carrying force. (kg) ⑥
208 193 01 03	208 889 00 03	1 730 379	238 576	243 888	60	249 859	550

Type and supplier overview hydraulic system

Electrically unlockable solenoid valve		Quantity controller		Angled screw connection		Hydraulic hose		Control cable
Supplier ⑫	Part no.	Supplier ⑬	Part no.	Supplier ⑭	Part no.	Supplier ⑮	Part no.	⑯
In scope of delivery		Stiefel	100 196 639	In scope of delivery		In scope of delivery		2x1 mm² obtained from independent retailer

ONLY AVAILABLE IN GERMANY

AXLES WITH RUBBER SUSPENSION FOR TRAILERS WITH

Single axle trailer 1,800 kg, tandem 3,500 kg, tridem 5,400 kg

YOUR ADVANTAGE

- Above a gross weight of 3,500 kg, an anti-lock brake (ALB) is prescribed in law.
- On tri-axles over GA 3,500 kg, the rearmost axle is prepared for installation of ALB.
- If the axles are combined with our height-adjustable drawbars, it is possible to dispense with weight compensation.

ACCESSORIES

See order overview (please order separately)

- Parking brake
- Shock absorber without fixing bolts (please only use the specially adapted AL-KO genuine shock absorbers)
- The hydraulic brake system as well as parts of the automatic anti-lock brake (ALB) should be ordered directly from the suppliers listed below:
  Wabco / Haldex / Knorr

SCOPE OF DELIVERY

- Automatic adjustment of the brake pads
- Shock absorber brackets
- Brackets for brake cylinders
- Top hat profile welded on
- Wheel nuts or wheel bolts
- Rod with brake rod
- Operating instructions

SURFACE TREATMENT

hot-dip galvanised

Single axle 1,800 kg axle load

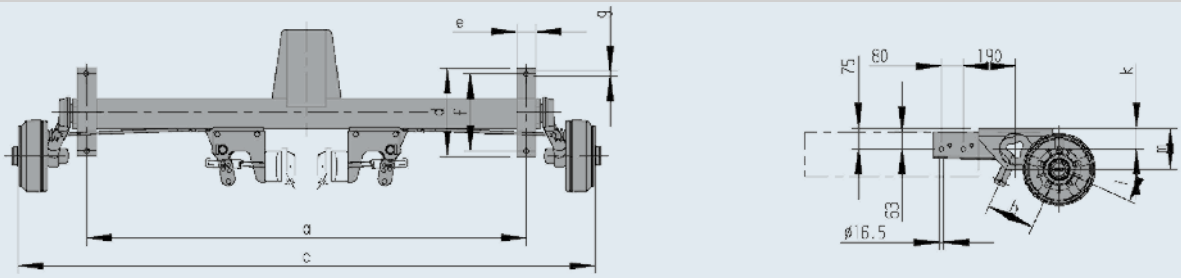

SAP: EURO1ACHSE DLF GLL EA1800

Part no.	SA TA TRI	Type	Single axle axle load kg	Tandem axle load kg	Tridem axle load kg	BC a mm	OHF c mm	OHF c min. mm	Axle beam	Wheel brake type	Wheel connec-tion	Wheel bolt ball	Offset mm	d mm	e mm	f mm
1 220 493	SA	BL 1800	1,800			1,400	1,900	1,800*	110	2361AR	112x5	M12x1.5	30	270	70	220
1 220 790	SA	BL 1800	1,800			1,500	2,000	1,800*	110	2361AR	112x5	M12x1.5	30	270	70	220
1 220 822	SA	BL 1800	1,800			1,600	2,100	1,800*	110	2361AR	112x5	M12x1.5	30	270	70	220
1 220 823	SA	BL 1800	1,800			1,700	2,200	1,800*	110	2361AR	112x5	M12x1.5	30	270	70	220
1 220 824	SA	BL 1800	1,800			1,800	2,300	1,800*	110	2361AR	112x5	M12x1.5	30	270	70	220
1 213 646	TA	BL 1800		3,500		1,400	1,900	1,800*	110	2361AR	112x5	M12x1.5	30	270	70	220
1 213 647	TA	BL 1800		3,500		1,500	2,000	1,800*	110	2361AR	112x5	M12x1.5	30	270	70	220
1 213 648	TA	BL 1800		3,500		1,600	2,100	1,800*	110	2361AR	112x5	M12x1.5	30	270	70	220
1 213 649	TA	BL 1800		3,500		1,700	2,200	1,800*	110	2361AR	112x5	M12x1.5	30	270	70	220
1 213 650	TA	BL 1800		3,500		1,800	2,300	1,800*	110	2361AR	112x5	M12x1.5	30	270	70	220
1 220 825	TRI	BL 1800			4,300	1,400	1,900	1,800*	110	2361AR	112x5	M12x1.5	30	270	70	220
1 220 826	TRI	BL 1800			4,300	1,500	2,000	1,800*	110	2361AR	112x5	M12x1.5	30	270	70	220
1 220 827	TRI	BL 1800			4,300	1,600	2,100	1,800*	110	2361AR	112x5	M12x1.5	30	270	70	220
1 220 828	TRI	BL 1800			4,300	1,700	2,200	1,800*	110	2361AR	112x5	M12x1.5	30	270	70	220
1 220 716	TRI	BL 1800			4,300	1,800	2,300	1,800*	110	2361AR	112x5	M12x1.5	30	270	70	220
1 220 829	TRI	BL 2000			5,400	1,400	1,900	1,800*	120	2361AR	112x5	M12x1.5	30	320	70	280
1 220 830	TRI	BL 2000			5,400	1,500	2,000	1,800*	120	2361AR	112x5	M12x1.5	30	320	70	280
1 220 122	TRI	BL 2000			5,400	1,600	2,100	1,800*	120	2361AR	112x5	M12x1.5	30	320	70	280
1 220 831	TRI	BL 2000			5,400	1,700	2,200	1,800*	120	2361AR	112x5	M12x1.5	30	320	70	280
1 220 832	TRI	BL 2000			5,400	1,800	2,300	1,800*	120	2361AR	112x5	M12x1.5	30	320	70	280

* Standard version: Distance between the brackets 300 mm, welded on at normal height, 25° swing arm position

PNEUMATIC BRAKES

Tandem 3,500 kg axle load

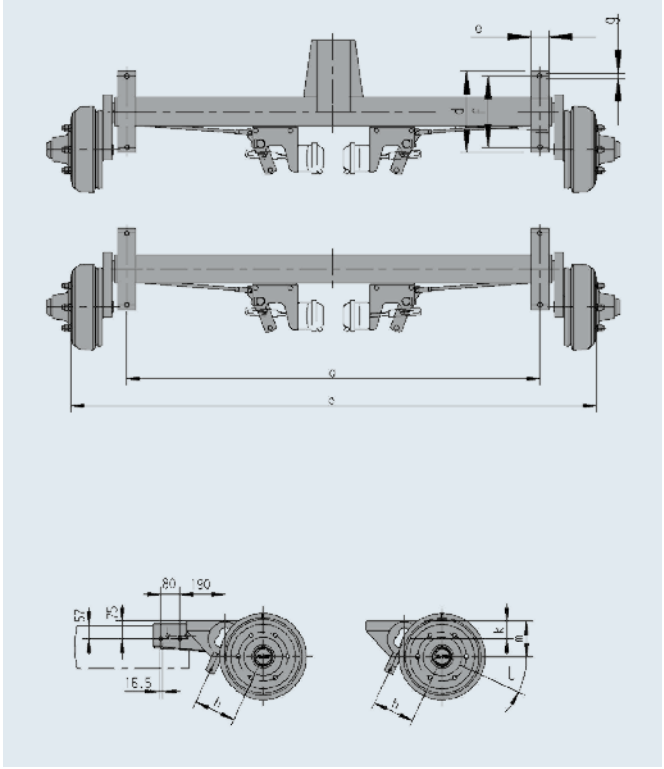

Tridem 4,300 kg axle load, tridem 5,400 kg axle load

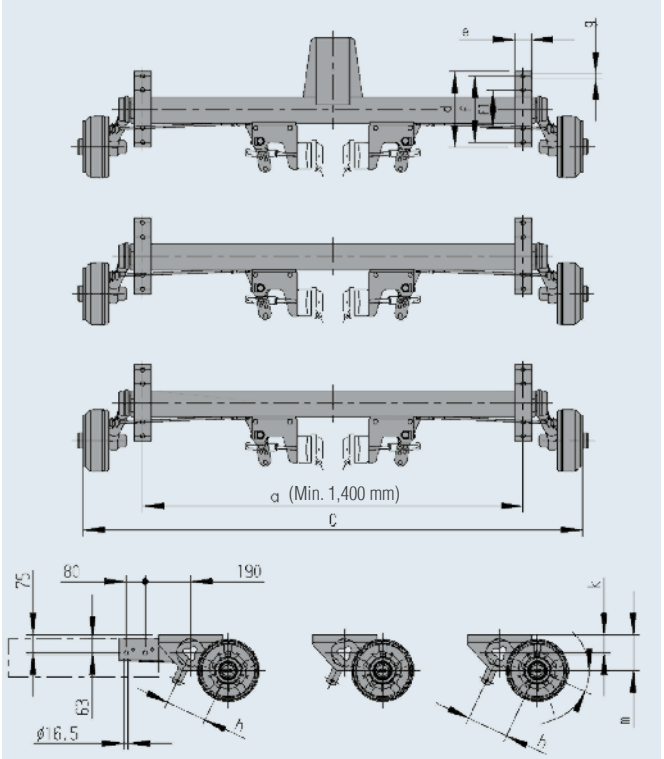

f1 mm	g mm Ø	h mm	l Base pos. unlad.	k mm	m mm	Vers. SC = Forged lever		Shock absorber per unit w/o bolted fasteners	Parking brake without Bowden cable or brake cable	Pre-stressed Brake cyl. Type: 9 Wabco, Knorr, Haldex Part no. (not included in AL-KO scope of delivery)
	18	175	25°	75	149	SC	83	244 086	267 005	*See chapter 18*
	18	175	25°	75	149	SC	84	244 086	267 005	*See chapter 18*
	18	175	25°	75	149	SC	85	244 086	267 005	*See chapter 18*
	18	175	25°	75	149	SC	86	244 086	267 005	*See chapter 18*
	18	175	25°	75	149	SC	87	244 086	267 005	*See chapter 18*
	18	175	25°	75	149	SC	166	244 086	267 005	*See chapter 18*
	18	175	25°	75	149	SC	168	244 086	267 005	*See chapter 18*
	18	175	25°	75	149	SC	170	244 086	267 005	*See chapter 18*
	18	175	25°	75	149	SC	172	244 086	267 005	*See chapter 18*
	18	175	25°	75	149	SC	174	244 086	267 005	*See chapter 18*
	18	175	25°	75	149	SC	249	244 086	267 005	*See chapter 18*
	18	175	25°	75	149	SC	252	244 086	267 005	*See chapter 18*
	18	175	25°	75	149	SC	255	244 086	267 005	*See chapter 18*
	18	175	25°	75	149	SC	258	244 086	267 005	*See chapter 18*
	18	175	25°	75	149	SC	261	244 086	267 005	*See chapter 18*
220	18	175	25°	75	149	SC	264	244 086	267 005	*See chapter 18*
220	18	175	25°	75	149	SC	267	244 086	267 005	*See chapter 18*
220	18	175	25°	75	149	SC	270	244 086	267 005	*See chapter 18*
220	18	175	25°	75	149	SC	273	244 086	267 005	*See chapter 18*
220	18	175	25°	75	149	SC	276	244 086	267 005	*See chapter 18*

AXLES WITH RUBBER SUSPENSION FOR TRAILERS WITH

Single axle trailer 3,000 kg, tandem 6,000 kg

YOUR ADVANTAGE

- Above a gross weight of 3,500 kg, an anti-lock brake (ALB) is specified by law.
- On tandem axles, the rearmost axle is prepared for installation of ALB.
- If the axles are combined with our height-adjustable drawbars, it is possible to dispense with weight compensation.
- Automatic adjustment of the brake pads.

ACCESSORIES

See order overview
(please order separately)

- Parking brake
- Shock absorber without fixing bolts (please only use the specially adapted AL-KO genuine shock absorbers)
- The hydraulic brake system as well as parts of the automatic anti-lock brake (ALB) should be ordered directly from the suppliers listed below:
  Wabco / Haldex / Knorr

SCOPE OF DELIVERY

- Shock absorber brackets
- Brackets for brake cylinders
- Top hat profile welded on
- Wheel nuts
- Rod with brake rod
- Operating instructions

SURFACE TREATMENT

hot-dip galvanised

SAP: ACHSE GU LNGS DLF EA3000 RB3062

Part no.	SA TA	Type	Single axle axle load kg	Tandem axle load kg	BC a mm	OHF c mm	OHF c min. mm	Axle beam	Wheel brake type	Wheel connec-tion	Wheel nut ball	Offset mm	d mm	e mm	f mm
1 220 816	SA	BL 3000	3,000		1,330	1,800	1,750*	120	3062AR	205x6	M18x1.5	0	320	70	280
1 220 817	SA	BL 3000	3,000		1,430	1,900	1,750*	120	3062AR	205x6	M18x1.5	0	320	70	280
1 220 818	SA	BL 3000	3,000		1,530	2,000	1,750*	120	3062AR	205x6	M18x1.5	0	320	70	280
1 220 819	SA	BL 3000	3,000		1,630	2,100	1,750*	120	3062AR	205x6	M18x1.5	0	320	70	280
1 220 820	SA	BL 3000	3,000		1,730	2,200	1,750*	120	3062AR	205x6	M18x1.5	0	320	70	280
1 220 821	SA	BL 3000	3,000		1,830	2,300	1,750*	120	3062AR	205x6	M18x1.5	0	320	70	280
1 213 651	TA	BL 2700		5,000	1,330	1,800	1,750*	120	3062AR	205x6	M18x1.5	0	320	70	280
1 213 652	TA	BL 2700		5,000	1,430	1,900	1,750*	120	3062AR	205x6	M18x1.5	0	320	70	280
1 213 653	TA	BL 2700		5,000	1,530	2,000	1,750*	120	3062AR	205x6	M18x1.5	0	320	70	280
1 213 654	TA	BL 2700		5,000	1,630	2,100	1,750*	120	3062AR	205x6	M18x1.5	0	320	70	280
1 213 655	TA	BL 2700		5,000	1,730	2,200	1,750*	120	3062AR	205x6	M18x1.5	0	320	70	280
1 213 656	TA	BL 2700		5,000	1,830	2,300	1,750*	120	3062AR	205x6	M18x1.5	0	320	70	280
1 213 657	TA	BL 3000		6,000	1,330	1,800	1,750*	120	3062AR	205x6	M18x1.5	0	320	70	280
1 213 658	TA	BL 3000		6,000	1,430	1,900	1,750*	120	3062AR	205x6	M18x1.5	0	320	70	280
1 213 659	TA	BL 3000		6,000	1,530	2,000	1,750*	120	3062AR	205x6	M18x1.5	0	320	70	280
1 213 660	TA	BL 3000		6,000	1,630	2,100	1,750*	120	3062AR	205x6	M18x1.5	0	320	70	280
1 213 661	TA	BL 3000		6,000	1,730	2,200	1,750*	120	3062AR	205x6	M18x1.5	0	320	70	280
1 213 662	TA	BL 3000		6,000	1,830	2,300	1,750*	120	3062AR	205x6	M18x1.5	0	320	70	280

* Standard version: Distance between the brackets 300 mm, welded on at normal height, 25° swing arm position

PNEUMATIC BRAKES

Single axle 3,000 kg axle load

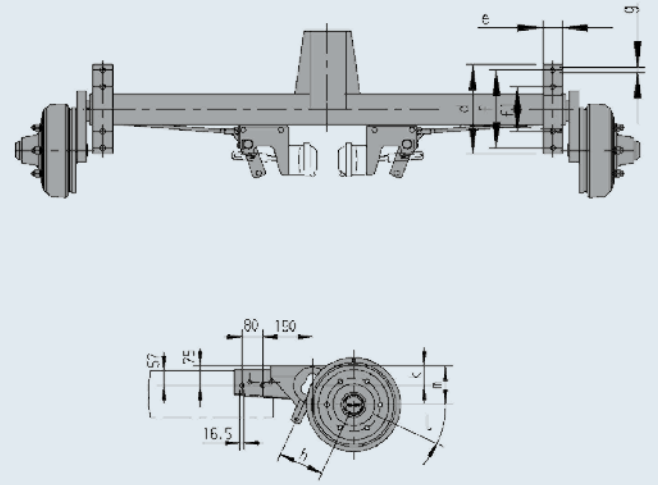

Tandem 5,000 kg axle load, tandem 6,000 kg axle load

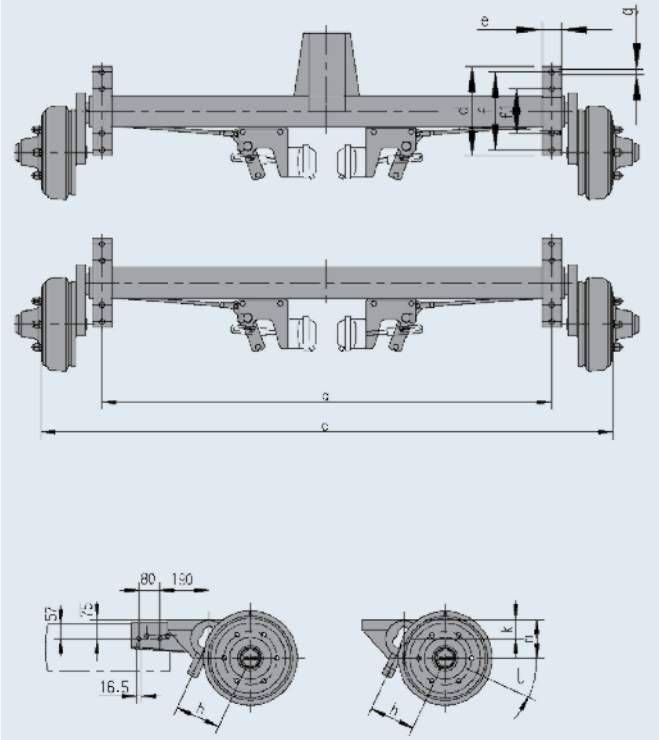

f1 mm	g mm Ø	h mm	l Base pos. unlad.	k mm	m mm	Vers. SC = Forged lever		Shock absorber per unit w/o bolted fasteners	Parking brake without Bowden cable or brake cable	Pre-stressed Brake cyl. Type: 9 Wabco, Knorr, Haldex Part no. (not included in AL-KO scope of delivery)
220	18	175	25°	75	143	SC	133	244 087	267 005	*See chapter 18*
220	18	175	25°	75	143	SC	134	244 087	267 005	*See chapter 18*
220	18	175	25°	75	143	SC	135	244 087	267 005	*See chapter 18*
220	18	175	25°	75	143	SC	136	244 087	267 005	*See chapter 18*
220	18	175	25°	75	143	SC	137	244 087	267 005	*See chapter 18*
220	18	175	25°	75	143	SC	138	244 087	267 005	*See chapter 18*
220	18	175	25°	75	143	SC	266	244 087	267 005	*See chapter 18*
220	18	175	25°	75	143	SC	268	244 087	267 005	*See chapter 18*
220	18	175	25°	75	143	SC	270	244 087	267 005	*See chapter 18*
220	18	175	25°	75	143	SC	272	244 087	267 005	*See chapter 18*
220	18	175	25°	75	143	SC	274	244 087	267 005	*See chapter 18*
220	18	175	25°	75	143	SC	276	244 087	267 005	*See chapter 18*
220	18	175	25°	75	143	SC	280	244 087	267 005	*See chapter 18*
220	18	175	25°	75	143	SC	282	244 087	267 005	*See chapter 18*
220	18	175	25°	75	143	SC	285	244 087	267 005	*See chapter 18*
220	18	175	25°	75	143	SC	289	244 087	267 005	*See chapter 18*
220	18	175	25°	75	143	SC	294	244 087	267 005	*See chapter 18*
220	18	175	25°	75	143	SC	299	244 087	267 005	*See chapter 18*

AXLES WITH STEEL SUSPENSION FOR TRAILERS WITH

single axle trailer 4,000 kg, Tandem 7,500 kg

YOUR ADVANTAGE

- Above a gross weight of 3,500 kg, an anti-lock brake (ALB) is specified by law.
- On single or tandem axles, the rearmost axle in each case is prepared for installation of ALB.
- If the axles are combined with our height-adjustable drawbars, it is possible to dispense with weight compensation.
- Automatic adjustment of the brake pads.

ACCESSORIES

See order overview
(please order separately)

- Parking brake
- Shock absorber without fixing bolts (please only use the specially adapted AL-KO genuine shock absorbers)
  Important: Axles with steel suspension must be equipped with shock absorbers
- The hydraulic brake system as well as parts of the automatic anti-lock brake (ALB) should be ordered directly from the suppliers listed below:
  Wabco / Haldex / Knorr

SCOPE OF DELIVERY

- Shock absorber brackets
- Brackets for brake cylinders
- Top hat profile welded on
- Wheel nuts
- Rod with brake rod
- Operating instructions

SURFACE TREATMENT

Synthetic resin dip-priming black
(Steel spring axles cannot be hot-dip galvanised)

SAP: ACHSE ST LNGS ABV EA4000

Part no.	Single axle SA Tandem TA	Axle type	Single axle axle load kg	Tandem axle load kg	BC a mm	OHF c mm	OHF c min. mm	Axle beam	Wheel brake type	Wheel connection	Wheel nut ball	Offset mm	d mm	e mm	f mm
1 211 875	SA	BT 4000	4,000		1,260	1,800	1,750	114x6	3081AR/B	205x6	M18x1.5	0	320	70	280
1 211 876	SA	BT 4000	4,000		1,360	1,900	1,750	114x6	3081AR/B	205x6	M18x1.5	0	320	70	280
1 211 877	SA	BT 4000	4,000		1,460	2,000	1,750	114x6	3081AR/B	205x6	M18x1.5	0	320	70	280
1 211 878	SA	BT 4000	4,000		1,560	2,100	1,750	114x6	3081AR/B	205x6	M18x1.5	0	320	70	280
1 211 879	SA	BT 4000	4,000		1,660	2,200	1,750	114x6	3081AR/B	205x6	M18x1.5	0	320	70	280
1 220 833	SA	BT 4000	4,000		1,760	2,300	1,750	114x6	3081AR/B	205x6	M18x1.5	0	320	70	280
1 211 886	TA	BT 4000		7,500	1,260	1,800	1,750	114x6	3081AR/B	205x6	M18x1.5	0	320	70	280
1 211 887	TA	BT 4000		7,500	1,360	1,900	1,750	114x6	3081AR/B	205x6	M18x1.5	0	320	70	280
1 211 888	TA	BT 4000		7,500	1,460	2,000	1,750	114x6	3081AR/B	205x6	M18x1.5	0	320	70	280
1 211 889	TA	BT 4000		7,500	1,560	2,100	1,750	114x6	3081AR/B	205x6	M18x1.5	0	320	70	280
1 211 890	TA	BT 4000		7,500	1,660	2,200	1,750	114x6	3081AR/B	205x6	M18x1.5	0	320	70	280
1 211 891	TA	BT 4000		7,500	1,760	2,300	1,750	114x6	3081AR/B	205x6	M18x1.5	0	320	70	280

PNEUMATIC BRAKES

Single axle 4,000 kg axle load

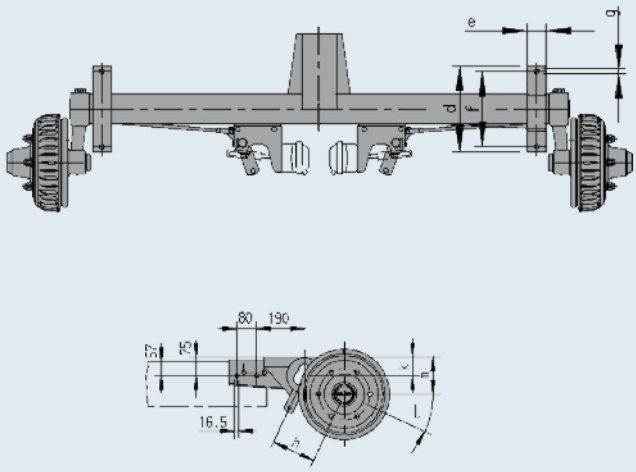

Tandem 7,500 kg axle load

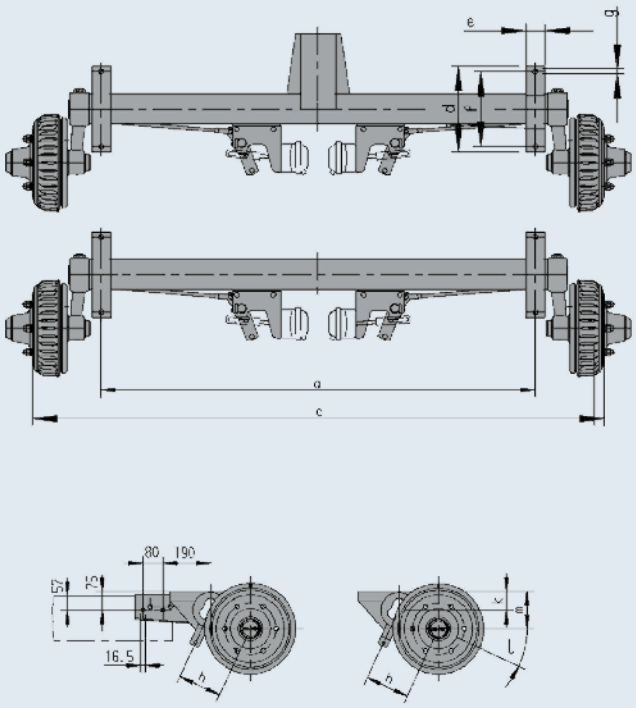

IMPORTANT!
The screw connection of the axle bracket onto the frame must exclusively be made using dimension f.

f1 mm	g mm Ø	h mm	l Base pos. unlad.	k mm	m mm	Vers. SC = Forged lever		Shock absorber per unit w/o bolted fasteners	Parking brake without Bowden cable or brake cable	Pre-stressed Brake cyl. Type: 9 Wabco, Knorr, Haldex Part no. (not included in AL-KO scope of delivery)
220	18	200	20°	75	143	SC	185	244 087	267 005	*See chapter 18*
220	18	200	20°	75	143	SC	187	244 087	267 005	*See chapter 18*
220	18	200	20°	75	143	SC	189	244 087	267 005	*See chapter 18*
220	18	200	20°	75	143	SC	191	244 087	267 005	*See chapter 18*
220	18	200	20°	75	143	SC	193	244 087	267 005	*See chapter 18*
220	18	200	20°	75	143	SC	195	244 087	267 005	*See chapter 18*
220	18	200	20°	75	143	SC	370	244 087	267 005	*See chapter 18*
220	18	200	20°	75	143	SC	374	244 087	267 005	*See chapter 18*
220	18	200	20°	75	143	SC	378	244 087	267 005	*See chapter 18*
220	18	200	20°	75	143	SC	382	244 087	267 005	*See chapter 18*
220	18	200	20°	75	143	SC	386	244 087	267 005	*See chapter 18*
220	18	200	20°	75	143	SC	390	244 087	267 005	*See chapter 18*

WHEEL BRAKE 1637 PAIR

1,000 kg

TECHNOLOGY

All AL-KO wheel brakes are ECE-tested and can be connected to the corresponding AL-KO overrun devices (allocation calculation).
Install wheel brakes with the correct direction of rotation!
The brake pads used are free of asbestos!

SCOPE OF DELIVERY

- (See order overview)
- Wheel bolts and axle Bowden cables not included in delivery!
  Please order separately

SURFACE TREATMENT

- Galvanised

POSSIBLE WHEEL CONNECTIONS

- On request
- Suitable for rims with centre hole min. 57 mm

Comply with installation guidelines!



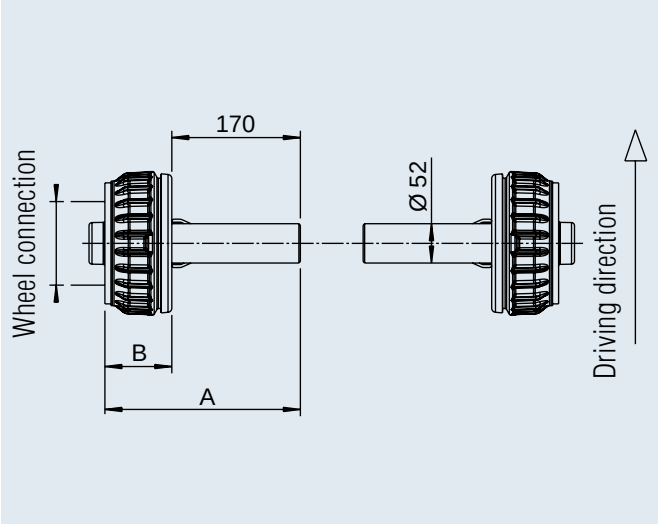

SAP: RADBREMSE 1637 PAAR EURO

Wheel brake 1637 EURO Pair 1000 kg

Part no.	Wheel load per hub kg	Wheel connection Connection mm	Wheel connection Thread mm x mm	Offset mm	Dimensions A mm	Dimensions B mm	Bearing type				
1 225 204	500	100x4	M12 x 1.5	27-33	258	88	Compact	23	-	-	20

Wheel brake 1637 EURO Pair 1000 kg watertight

Part no.	Wheel load per hub kg	Wheel connection Connection mm	Wheel connection Thread mm x mm	Offset mm	Dimensions A mm	Dimensions B mm	Bearing type				
1 730 615	500	100x4	M12 x 1.5	27-33	258	88	Compact	23	-	-	20

WHEEL BRAKE 2051 PAIR

1,500 kg with stub

TECHNOLOGY

All AL-KO wheel brakes are ECE-tested (official characteristic value) and can be connected to the corresponding AL-KO overrun devices (allocation calculation). Install wheel brakes with the correct direction of rotation!
The brake pads used in the wheel brakes are free of asbestos!

SCOPE OF DELIVERY

- (See order overview)
- Wheel bolts and axle Bowden cables not included in delivery! Please order separately

SURFACE TREATMENT

- Stub: dip primed black
- Wheel brake: galvanised
- Brake drum painted

POSSIBLE WHEEL CONNECTIONS

- On request
- Suitable for rims with centre hole min. 57 mm

Comply with installation guidelines!



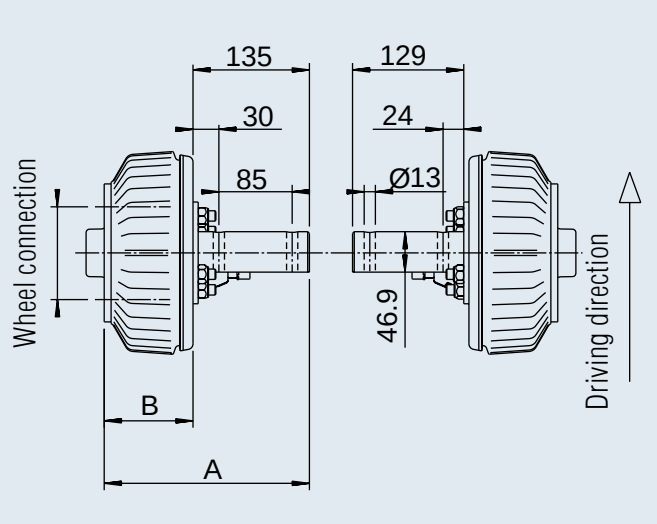

SAP: RADBREMSE 2051AB PAAR 1500 M STUMMEL

Wheel brake 2051AB PLUS pair 1500 kg with stub for screwing in

Part no.	Wheel load per hub kg	Wheel connection Connection mm	Wheel connection Thread mm x mm	Offset mm	Dimensions A mm	Dimensions B mm	Bearing type				
1 225 472	750	112x5	M12 x 1.5	27-33	238	103	Compact	29.5	-	150	10

Wheel brake 2051AB PLUS pair 1500 kg watertight with stub for screwing in

Part no.	Wheel load per hub kg	Wheel connection Connection mm	Wheel connection Thread mm x mm	Offset mm	Dimensions A mm	Dimensions B mm	Bearing type				
1 225 699	750	112x5	M12 x 1.5	27-33	238	103	Compact	29.7	-	150	10

WHEEL BRAKE 2361 PAIR

1,800 kg with stub

TECHNOLOGY

All AL-KO wheel brakes are ECE-tested (official characteristic value) and can be connected to the corresponding AL-KO overrun devices (allocation calculation).
Install wheel brakes with the correct direction of rotation!
The brake pads used in the wheel brakes are free of asbestos!

SCOPE OF DELIVERY

- (See order overview)
- Wheel bolts and axle Bowden cables not included in delivery! Please order separately.

SURFACE TREATMENT

- Galvanised

POSSIBLE WHEEL CONNECTIONS

- On request
- Suitable for rims with centre hole min. 57 mm

Comply with installation guidelines!



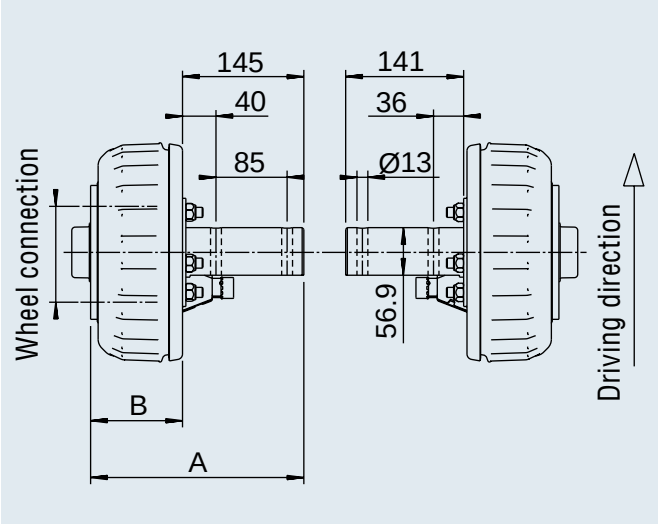

SAP: RADBREMSE 2361 PAAR 1800 M STUMMEL

Wheel brake 2361AB PLUS pair 1800 kg with stub for screwing in

Part No.	Wheel load per hub kg	Wheel connection Connection mm	Wheel connection Thread mm x mm	Offset mm	Dimensions A mm	Dimensions B mm	Bearing type				
1 225 474	900	112x5	M12 x 1.5	27-33	255	114	Compact	43.7	-	150	10

Wheel brake 2361AB PLUS pair 1800 kg watertight with stub for screwing in

Part No.	Wheel load per hub kg	Wheel connection Connection mm	Wheel connection Thread mm x mm	Offset mm	Dimensions A mm	Dimensions B mm	Bearing type				
1 225 700	900	112x5	M12 x 1.5	27-33	258	117	Compact	46.2	-	150	10

WHEEL BRAKE 3081A PAIR

2,500 kg

TECHNOLOGY

All AL-KO wheel brakes are ECE-tested and can be connected to the corresponding AL-KO overrun devices (allocation calculation).
Install wheel brakes with the correct direction of rotation!
The brake pads used are free of asbestos!

SCOPE OF DELIVERY

- (See order overview)
- Wheel bolts and wheel nuts are included in the scope of delivery!
- Axle Bowden cables are not included in the scope of delivery!
  Please order separately.

SURFACE TREATMENT

- Synthetic resin dip-coating black

POSSIBLE WHEEL CONNECTIONS

- On request
- Suitable for rims with centre hole min. 161 mm

4

Comply with installation guidelines!



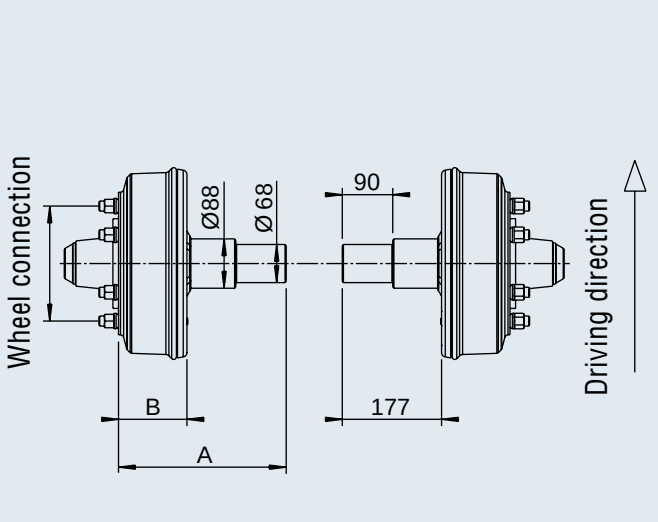

SAP: RADBREMSE 3081A PAAR

Wheel brake 3081 A Pair 2500 kg

Part no.	Wheel load per hub kg	Wheel connection Connec-tion mm	Wheel connection Thread mm x mm	Offset mm	Dimensions A mm	Dimensions B mm	Bearing type				
1 210 552	1,250	205x6	M18 x 1.5	0	299	122	Taper	79	-	-	20

BRAKED AXLES

With waterproof bearings 750 to 1,800 kg



YOUR ADVANTAGE

- Compact bearing absolutely watertight due to special seals on both sides
- Proven in the automotive sector
- Maintenance-free (lifetime lubrication)
- Bearing adjustment no longer necessary during servicing
- The bearing is pressed into the bearing seat of the brake drum with high precision

IMPORTANT!

- Wheel brakes on the boat trailer must be allowed to cool before driving into the water!
- Regularly rinse the wheel brakes with clean water after driving into water (especially salt water) and comply with maintenance intervals!

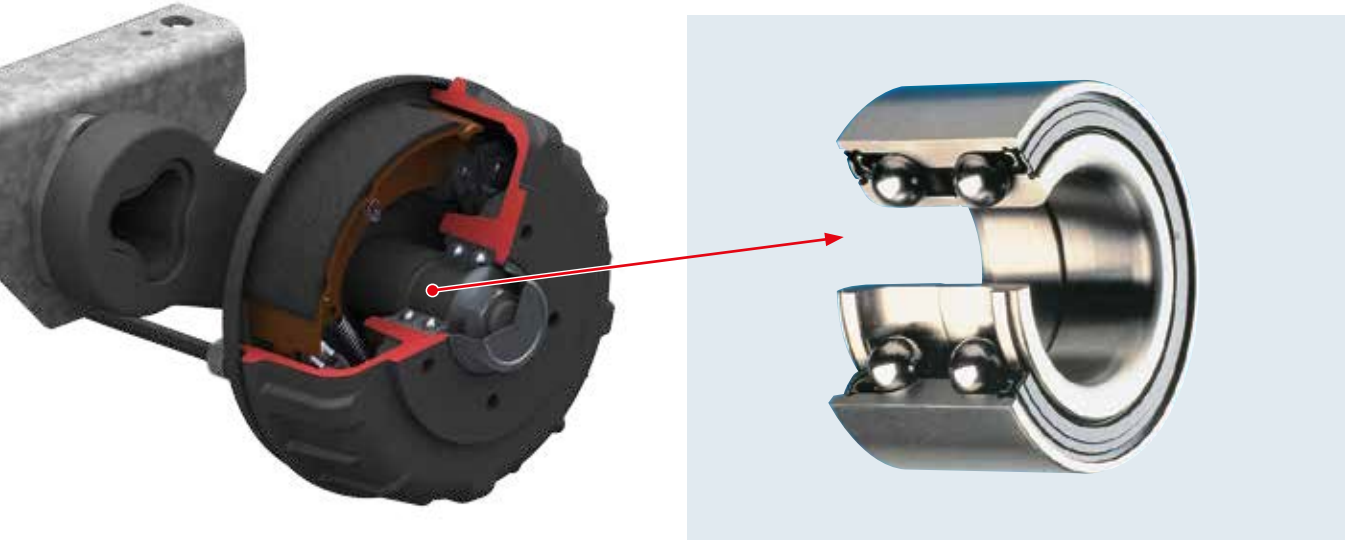

WATERTIGHT COMPACT BEARINGS
for running axles 750 – 1,800 kg
for braked axles 900 – 1,800 kg

Visual recognition mark
AL-KO WATERPROOF

Versions available

Unbraked axles						
Axle load for single axle	750 kg	1,500 kg	1,800 kg			

Braked axles						
Axle load for single axle	900 kg	1,000 kg	1,350 kg	1,500 kg	1,600 kg	1,800 kg
With wheel brake	1637	2051 Aa	2051 Aa	2051 From	2361	2361

ACCESSORIES FOR RIGID UNBRAKED AND BRAKED AXLES

Single axle and tandem axle

Leaf springs for 750 / 1,500 / 1,800 kg

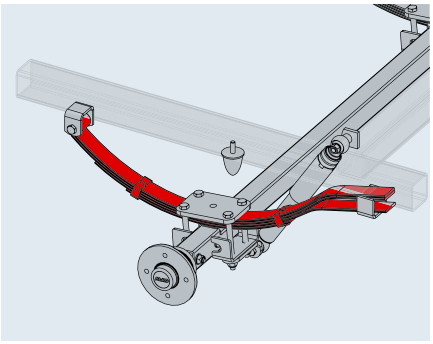

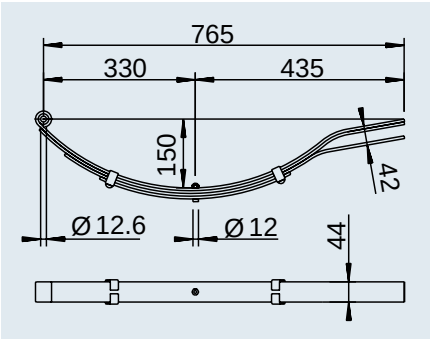

SAP: BLATTFEDER 375 KG

Leaf spring for straight axle 750 kg	
Part no.	1 368 092
Surface treatment	primed
	6.2 kg
	–
	135 units

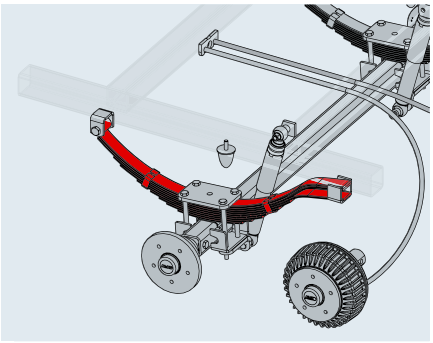

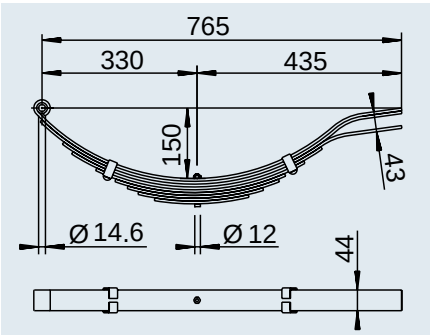

SAP: BLATTFEDER 750 KG

Leaf spring for straight axle 1,500 kg	
Part no.	1 368 110
Surface treatment	primed
	9.8 kg
	–
	135 units

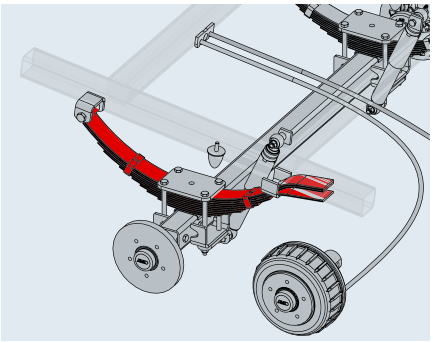

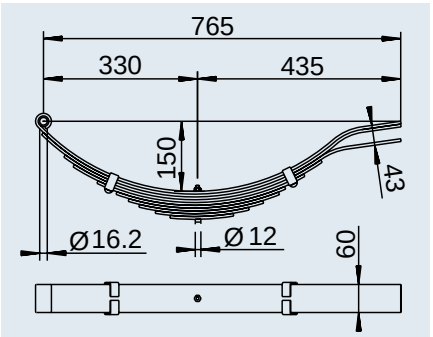

SAP: BLATTFEDER 900 KG

Leaf spring for straight axle 1800 kg	
Part no.	1 369 701
Surface treatment	primed
	13.8 kg
	–
	135 units

Shock absorber for 750 / 1,500 / 1,800 kg and tandem 3,000 / 3,500 kg

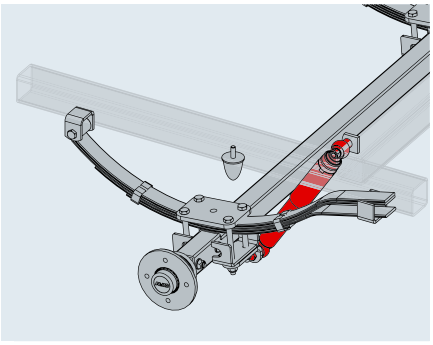

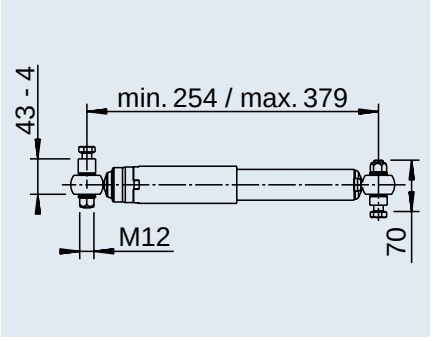

SAP: STOSSDÄMPFER A2-125-160/50 KB

Shock absorber for straight axle 750/1,500/ 1,800 kg I tandem 3,000/3,500 kg	
Part no.	283 722
Surface treatment	primed
	1.3 kg
	–
	350 units

Order overview Mounting material for leaf springs 750 / 1,500 / 1,800 kg

SAP: MONTAGETEILE BLATTFED 750 KG

Mounting material for leaf spring 750 kg	
Part no.	1 225 345
Surface treatment	galvanised
	3.5 kg
	50 units
	–

SAP: MONTAGETEILE BLATTFED 1500 KG

Mounting material for leaf spring 1,500 kg	
Part no.	1 225 243
Surface treatment	galvanised
	3.7 kg
	50 units
	–

SAP: MONTAGETEILE BLATTFED 1800 KG

Mounting material for leaf spring 1,800 kg	
Part no.	1 225 600
Surface treatment	galvanised
	5.2 kg
	50 units
	–

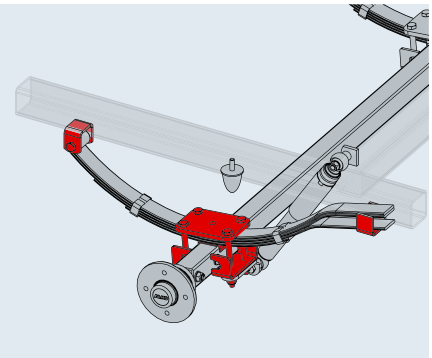

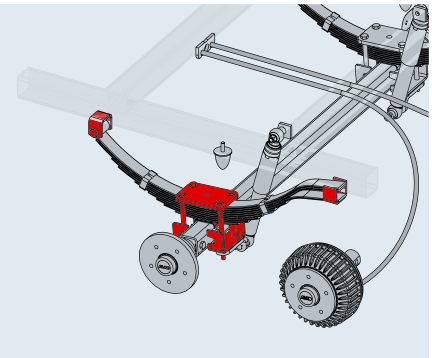

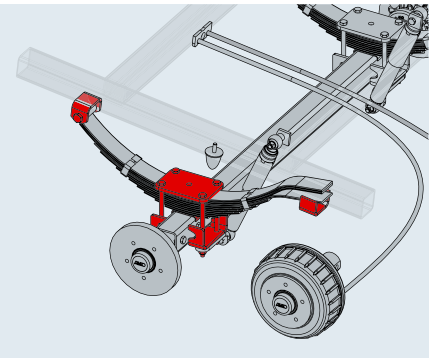

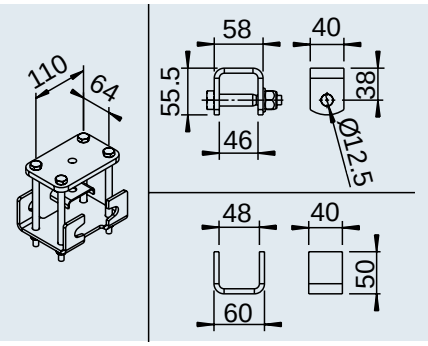

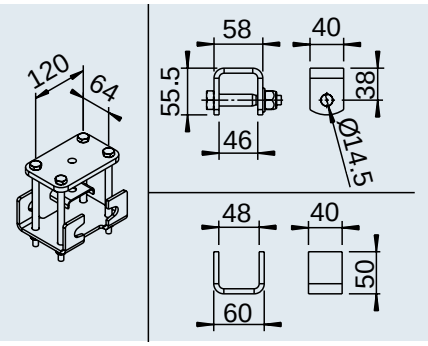

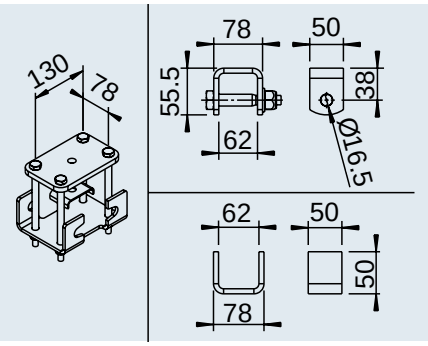

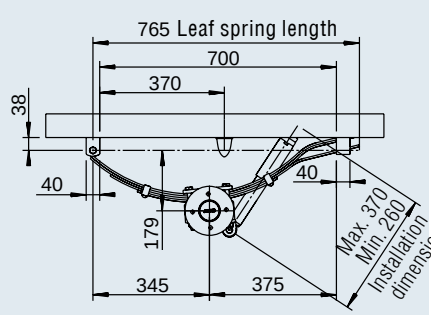

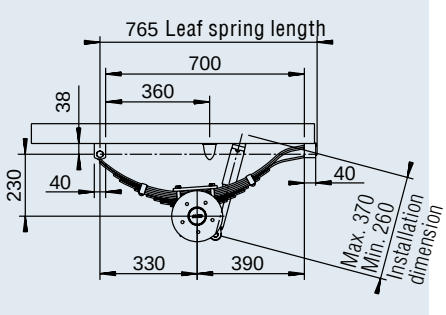

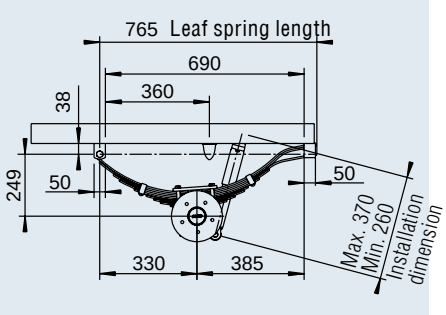

ACCESSORIES FOR RIGID UNBRAKED / BRAKED AXLES

Single axle and tandem axle

Mounting material for shock absorber 750 / 1,500 / 1,800 kg

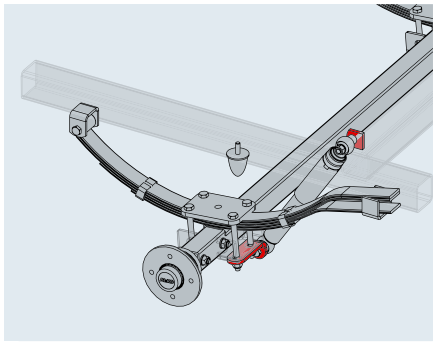

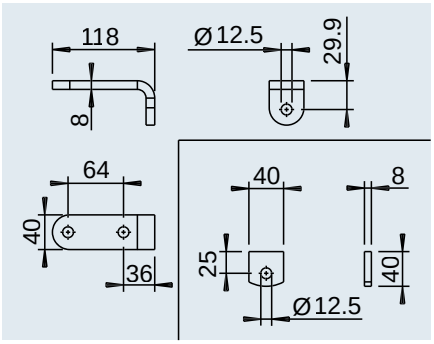

SAP: MONTAGETEILE STOSSD BLATTFED 750 KG

Mounting material for shock absorber 750 kg	
Part no.	1 225 210
Surface treatment	galvanised
	0.5 kg
	50 units
	–

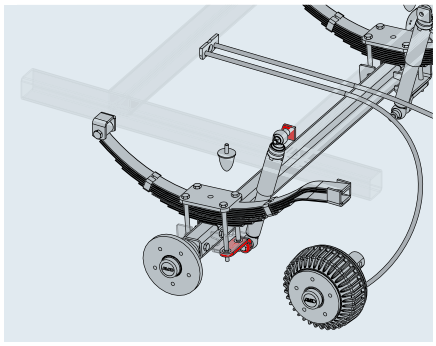

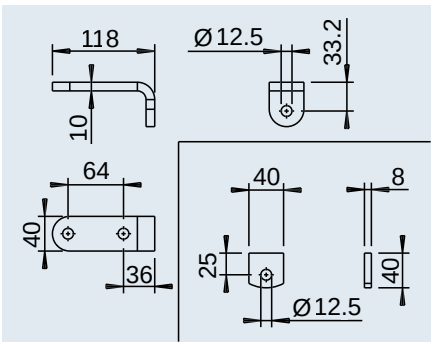

SAP: MONTAGETEILE STOSSD BLATTFED 1500 KG

Mounting material for shock absorber 1,500 kg	
Part no.	1 225 244
Surface treatment	galvanised
	0.5 kg
	50 units
	–

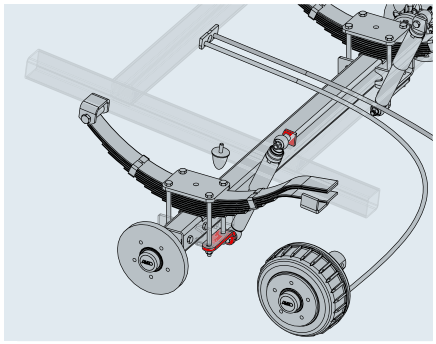

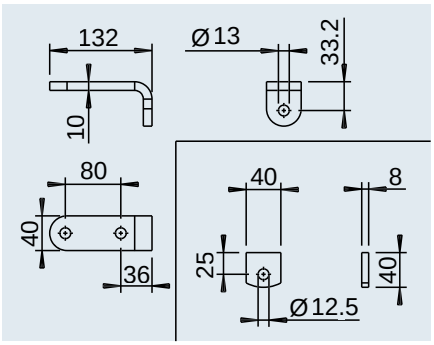

SAP: MONTAGETEILE STOSSD BLATTFED 1800 KG

Mounting material for shock absorber 1,800 kg	
Part no.	1 225 248
Surface treatment	galvanised
	0.6 kg
	50 units
	–

Rubber buffer for 750 / 1,500 / 1,800 kg and tandem 3,000 / 3,500 kg

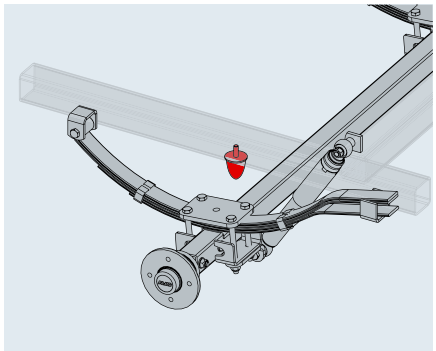

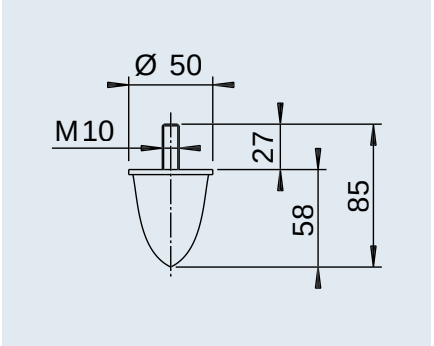

SAP: GUMMIPUFFER AUF PLATTE MIT M10

Rubber buffer for straight axle 750 / 1,500 / 1,800 kg I tandem 3,000 / 3,500 kg	
Part no.	691 393
Surface treatment	
	0.2 kg
	50 units
	–

COMBINATION HELP

for tandem axles and accessories

Tandem 3,000 kg

	Part no.	Number of units	Illustration	Dimensioned drawings
Leaf spring	1 368 110	4		See single axle
Mounting material for leaf spring	1 225 243	4		See single axle
Shock absorber	283 722	4		See single axle
Mounting material for shock absorber	1 225 244	4		See single axle
Rubber buffer	691 393	4		See single axle
Rigid braked axle	See rigid braked axles	1x front axle 1x rear axle		See rigid braked axles

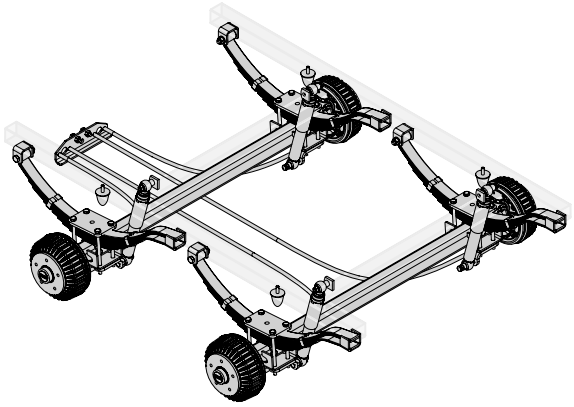

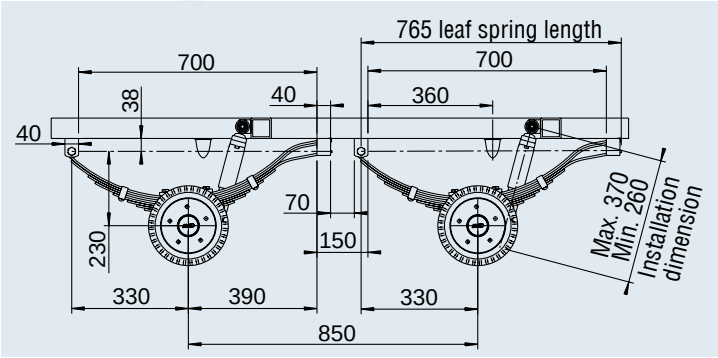

Tandem 3,500 kg

	Part no.	Number of units	Illustration	Dimensioned drawings
Leaf spring	1 369 701	4		See single axle
Mounting material for leaf spring	1 225 600	4		See single axle
Shock absorber	283 722	4		See single axle
Mounting material for shock absorber	1 225 248	4		See single axle
Rubber buffer	691 393	4		See single axle
Rigid braked axle	See rigid braked axles	1x front axle 1x rear axle		See rigid braked axles

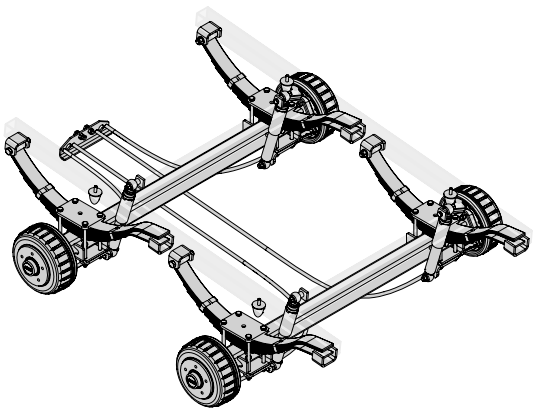

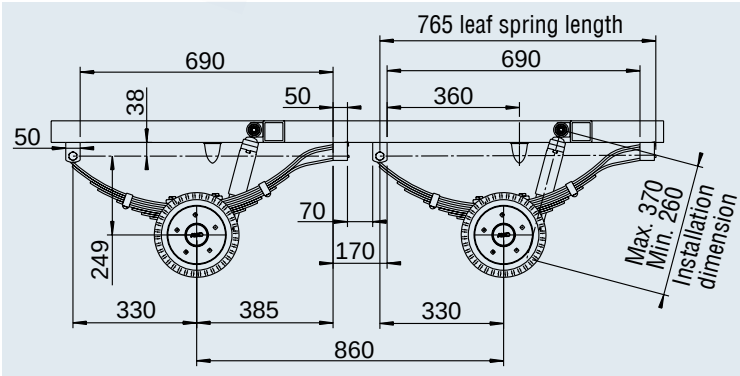

BOLT-ON DRAWBAR CONNECTION PROFILES

for COMPACT and PLUS axles

YOUR ADVANTAGE

- Combine your special chassis from stocked parts.
- Time-consuming welding on a top hat profile is no longer necessary.

SURFACE TREATMENT

- Hot-dip galvanised

SCOPE OF DELIVERY

(See technical drawing) incl.

- Mounting instructions, packed in cardboard box.
- Without fixing bolts for connection to the axle.

MOUNTING

1. Drawbar bolted to drawbar connection profiles

- Select a correct connection hole for the existing drawbar diameter on profiles.
- Position drawbar connection profiles at the side of the drawbar and secure with hexagon bolt (M12/M16).

Important: The spacer tube must be pressed or placed into the drawbar.

2. Fasten drawbar connection profiles to axle

- Place drawbar connection profiles on axle, bolt on with clamping bracket and supplied round-head screws (M12x35) as well as nuts.
- Align drawbar with axle and bolt on firmly.



SAP: SCHRAUBKLEMMVERBNDG PR 97VERP-45

Part no. Version	Version	for Compact, Plus hexagonal rubber suspension axle (from year of manufacture 1999)								
		Single axle	Tandem	Axle profile	Ø round	Square				
247 853	A	B 850/ B 1000	2000	80	70 88.9	60x60 70x60 100x100	4	-	100	2
247 684	A	B 1200/ B 1600	2600	97	70 88.9	70x70 100x100	4	-	100	2
249 116	B	B 850/ B 1000	1600	80		70x110 70x140 80x140	7	-	100	2
249 117	B	B 1200/ B 1600	3200	97		80x140 80x160 100x160 100x177 120x120 120x160 120x177	7	-	100	2

Version A – for overrun devices with central tube

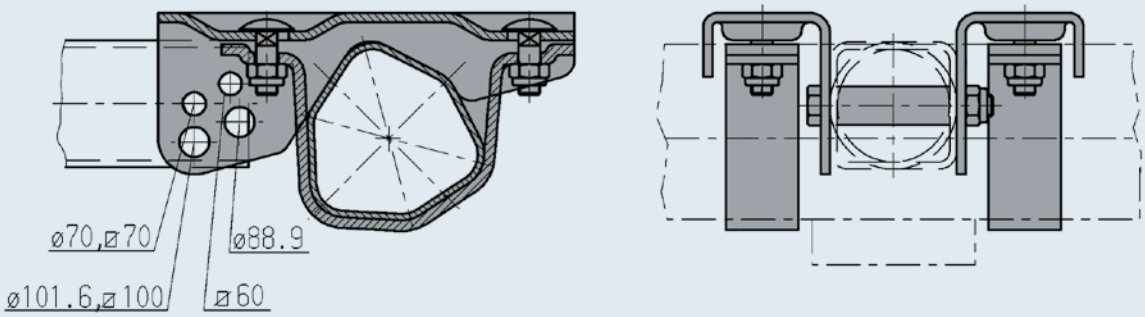

Version B – for height-adjustable overrun devices as well as with central tube type R35 (120x120)

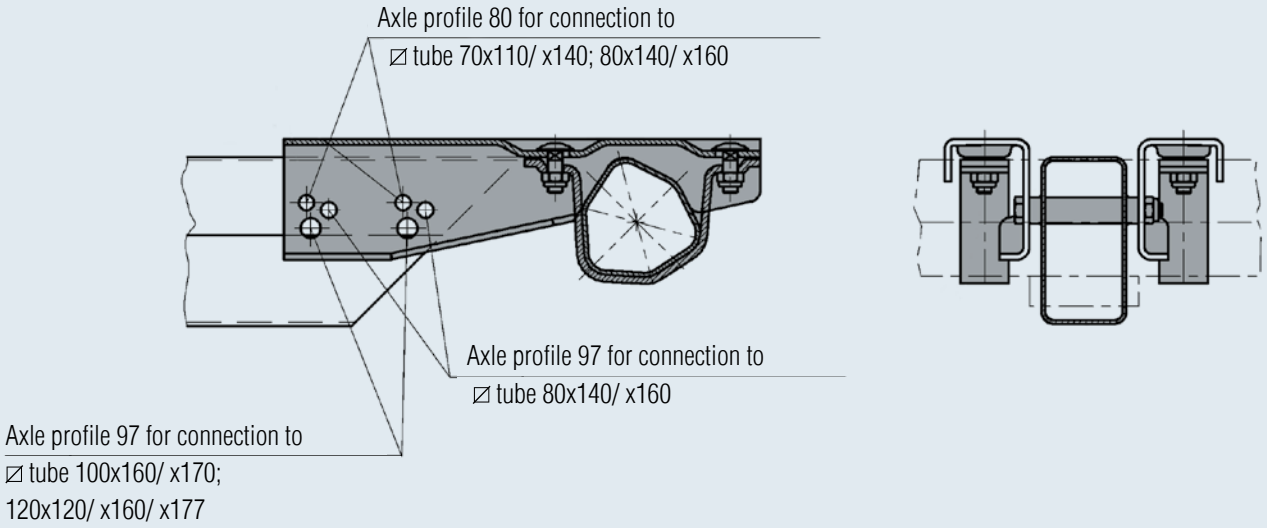

Recommended bolts for fastening to the drawbar with corresponding tightening torques

for drawbar section	Recommended bolt	Tightening torque*
Square 60x60 mm	M 12 x 100 8.8	75 Nm
Square 70x70 mm and round tube Ø 70 mm	M 12 x 110 8.8	75 Nm
Round tube Ø 88.9 mm	M 16 x 120 8.8	195 Nm
Square tube 100x100 mm	M 16 x 130 8.8	195 Nm
Square tube 70x110, 70x140 mm	M 12 x 120 8.8	75 Nm
Square tube 80x140, 80x160mm	M 12 x 120 8.8	75 Nm
Square tube 100x160, 100x170 mm	M 16 x 160 8.8	195 Nm
Square tube 120x120, 120x160, 120x177 mm	M 16 x 160 8.8	195 Nm

*Tightening torque must be selected according to the surface coating and friction value!

WELDED/BOLTED CONNECTIONS

for axles

TECHNOLOGY

Assembly:

1. The top hat profile can be welded on at the manufacturing plant if requested
2. Cut off the drawbar section (as required)
3. Drill two holes in the drawbar section.
   AL-KO drawbar tubes come with a hole with a spacer tube as standard.
   If using welded/bolted connections, it is additionally necessary to drill a hole with a spacer tube.
   With Ø tube drawbars – drill through centre horizontally for spacer tube 365.472 Ø 22, for 372.879 Ø 25.5
4. Weld on spacer tubes in the middle
5. Bolt on spacer tubes with hex bolt and self-locking nut,
   tightening torque 75 Nm with M 12;
   tightening torque 195 Nm with M 16

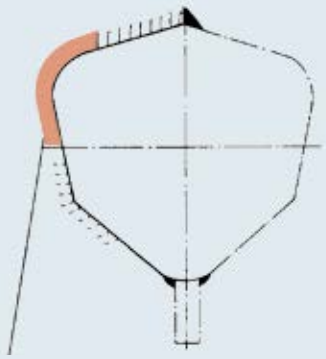

Important:
The area marked in red is not allowed to be welded (change in toe and camber)

AL-KO hexagonal rubber suspension axle version

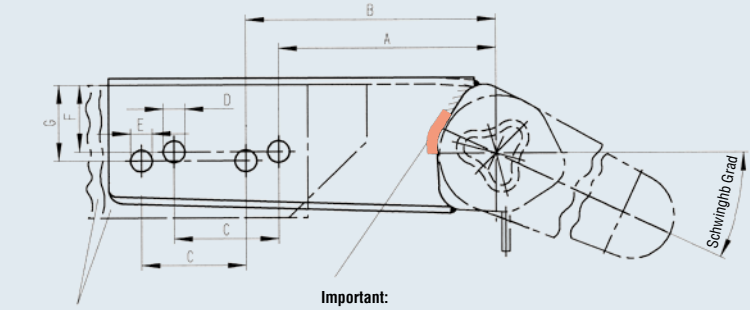

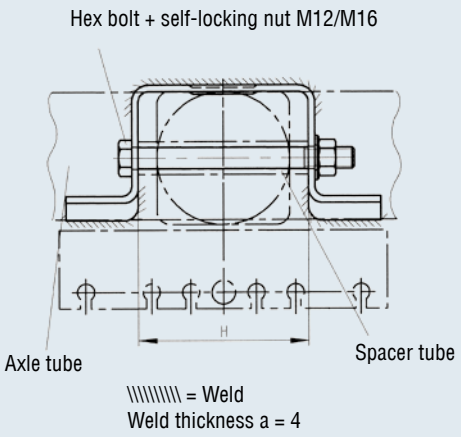

SAP: SCHWEISSCHRAUBVERBG PR 97 5GR SHST

Part no.	Weight range		Axle profile	Swing arm		Drawbar section	
	Single axle kg	Tandem kg		Standard degrees	Special degrees	Round Ø	Rectangular ☐ width
AL-KO hexagonal rubber suspension axles							
242 725	750		71	30°		70 & 88.9	70 & 80
243 108	750		71		5°	70 & 88.9	70 & 80
1 211 600	1,600	2,500	97		5°	70 & 88.9	70 & 80
1 211 601		3,000	97		5°		100 & 120
243 105	1,800	3,500	110	25°		88.9	100 & 120
243 107	1,800	3,500	110		5°	88.9	100 & 120
240 133	2,500	3,500	120	20°		88.9	100 & 120
242 724	2,500	3,500	120		5°	88.9	100 & 120
Steel spring axles							
240 134	3,500		Ø 114	20°			100 & 120



SCOPE OF DELIVERY

(see technical drawing) including:

- Fixing bolts
- With drawbar sections (height-adjustable), the spacer tubes are supplied with the drawbar sections
- Welding instructions part no. 604038

SURFACE TREATMENT

- Synthetic resin dip-coating black

Steel spring axle version

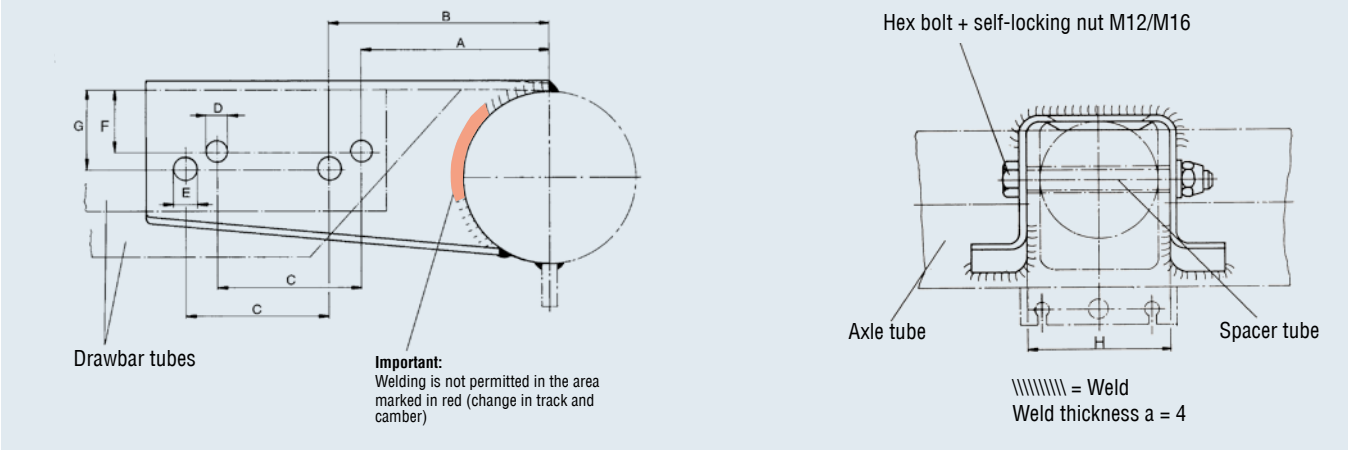

Dimensions (mm)											Part no.*
A	B	C	D	E	F	G	H				Spacer tube
175	190	80	12.5	12.5	36	45	90	1.8	–	70	365 472
175	190	80	12.5	12.5	36	45	90	1.8	–	70	365 472
175	190	80	12.5	12.5	36	45	90	2.6	–	50	365 472
165	190	80	16.5	16.5	51	58	130	2.8	–	50	–
160	190	80	16.5	16.5	45	58	130	2.8	–	40	372 879
160	190	80	16.5	16.5	45	58	130	2.8	–	40	372 879
160	190	80	16.5	16.5	45	58	130	2.8	–	40	372 879
160	190	80	16.5	16.5	45	58	130	2.8	–	40	372 879
–	190	80	–	16.5	–	58	130	3.5	–	40	–

*Important: If using Ø-drawbars, order 2x spacer tubes as well

CLAMPING SHELLS FOR AXLES

Single axle trailer up to 750 kg

TECHNOLOGY

Clamping connection assembly:
Mount drawbar tube and axle with clamping connection
Tighten with 4 hexagonal bolts M12.

Tightening torque:
75 Nm with 267 396
52 Nm with 267 395

SURFACE TREATMENT

- Clamping connections hot-dip galvanised

SCOPE OF DELIVERY

- (See technical drawing) incl. bolted fasteners



Version B

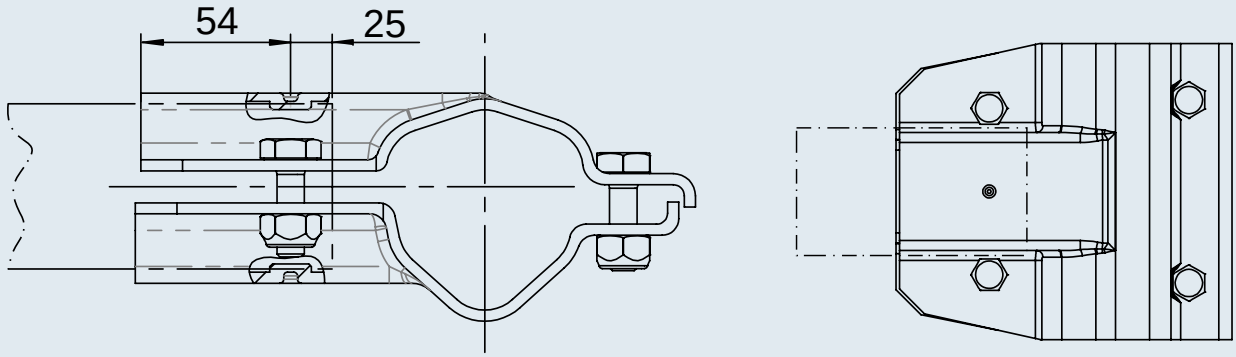

SAP: KLEMMSCH PR 62 VKT 60

Part no.	Version	Hexagonal rubber suspension axle			Drawbar tube	Slot for			
		Single axle	Axle profile Ø	Form	Square	Adapter bracket			
267 396	B	500	62		60	No	1.5	-	200
267 395	B	750	71		60	Yes	1.5	-	200

AXLE SHOCK ABSORBERS – OCTAGON PLUS

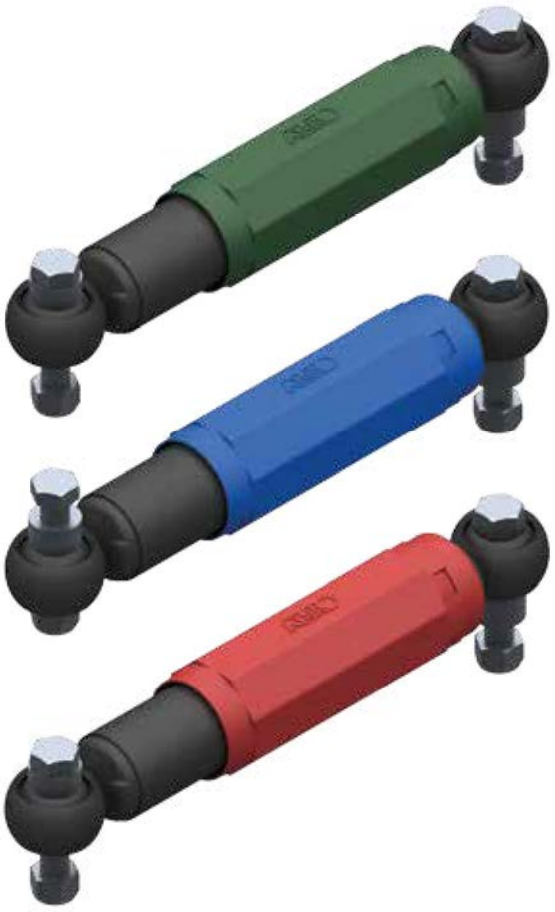

YOUR ADVANTAGE

- AL-KO Octagon shock absorbers are specifically set for a particular weight range *(see curve C)*.
- They thus improve the towing properties of the trailer optimally.

Colour	Single axle	Tandem axle
Green	900 kg	1,600 kg
Blue	1,350 kg	2,700 kg
Red	2,000 kg	3,500 kg
Black	4,000 kg	7,500 kg

To rule out any mix-ups, the different weight ranges are identified with different colours.

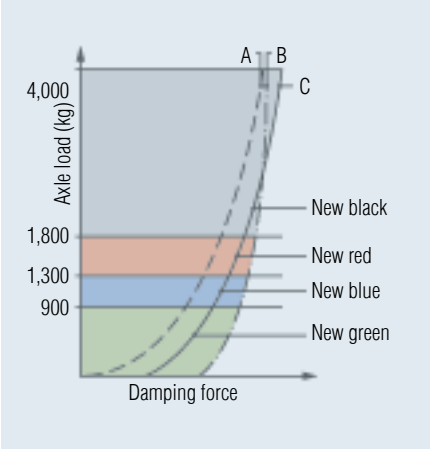

A Damping characteristic of AL-KO hexagonal rubber suspension axles

B Damping characteristic of previous shock absorbers

C Damping characteristic optimised by AL-KO Octagon shock absorbers

OPTIMAL DAMPING

What every driver of a vehicle combination dreads: oscillation of the trailer body on uneven roads.
The AL-KO Octagon shock absorber immediately reduces these dangerous bumping movements.

THIS MEANS:

- Greater driving stability
- Greater braking stability
- Optimum ground contact

SIMPLE INSTALLATION

- The rubber-mounted articulation connection eyes permit a low-wear, stress-free installation position at an angle of up to 5°.
- In contrast to commercially available shock absorbers, AL-KO Octagon shock absorbers have their bolts firmly integrated into the shock absorber eye, which means they are part of a shock absorber's scope of delivery along with the nuts.

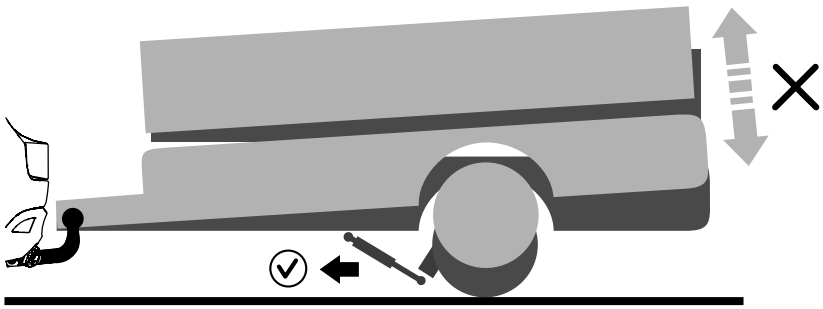



AXLE SHOCK ABSORBERS – OCTAGON COMPACT



Colour	Single axle	Tandem axle
Black	up to 4,000 kg	up to 7,500 kg

AXLE SHOCK ABSORBERS – UNIVERSAL COMPACT

SIMPLE INSTALLATION

The rubber-mounted articulation connection eyes permit a low-wear, stress-free installation position at an angle of up to 5°.

In contrast to commercially available shock absorbers, AL-KO Universal shock absorbers also have their bolts firmly integrated into the shock absorber eye, which means they are part of a shock absorber's scope of delivery along with the nuts.



The low-cost AL-KO Universal shock absorber

Colour	Single axle	Tandem axle
Black	up to 1,500 kg	up to 3,000 kg

AXLE SHOCK ABSORBER

Ordering overview

SAP: RADSTOSSDAEMPFER OCTAGON

Shock absorber	Version part no.	For AL-KO axles Trailing arm Semi-trailing arm	Single axle up to	Tandem axle up to	Colour	With articulation connection eyes	With fixing bolts			
	Octagon PLUS 244 084	Trailing arm and semi-trailing arm	up to 900 kg	up to 1,600 kg	Green	Yes	Yes	1.3	–	350
	Octagon PLUS reinforced* 1 204 542	Trailing arm and semi-trailing arm	Up to 900 kg	Up to 1,600 kg	Green	Yes	Yes	1.3	–	350
	Octagon PLUS 244 085	Trailing arm and semi-trailing arm	Up to 1,350 kg	Up to 2,700 kg	Blue	Yes	Yes	1.3	–	350
	Octagon PLUS reinforced* 1 204 589	Trailing arm and semi-trailing arm	Up to 1,350 kg	Up to 2,700 kg	Blue	Yes	Yes	1.3	–	350
	Octagon PLUS 244 086	Trailing arm and semi-trailing arm	Up to 2,000 kg	Up to 3,500 kg	Red	Yes	Yes	1.3	–	350
	Octagon PLUS reinforced* 1 204 590	Trailing arm and semi-trailing arm	Up to 2,000 kg	Up to 3,500 kg	Red	Yes	Yes	1.3	–	350
	Octagon COMPACT 244 087	Trailing arm and semi-trailing arm	Up to 4,000 kg	Up to 7,500 kg	Black	No	No	1.5	–	350
	Universal COMPACT 282 259	Trailing arm	Up to 1,500 kg	Up to 3,000 kg	Black	Yes	Yes	1.0	–	350

*Certain mechanical components (e.g. cylinders) that could be destroyed if overloaded are reinforced. The stroke and length dimensions as well as damping forces have not been changed.

SURFACE TREATMENT

Shock absorber epoxy paint (powder-coated)

SCOPE OF DELIVERY

- Shock absorber
  Per axle, please order:
  2x shock absorbers loose incl. fixing bolts
- Shock absorber brackets for swing arms on AL-KO axles
  Per axle, please order:
  1 set or 2 sets of shock absorber brackets
- Holding bars for the trailer manufacturer's vehicle frame
  Per axle, please order as required:
  2x holding bars



Application example

Colour	Single axle	Tandem axle
Green	900 kg	1,600 kg
Blue	1,350 kg	2,700 kg
Red	2,000 kg	3,500 kg
Black	4,000 kg	7,500 kg

To rule out any mix-ups, the different weight ranges are identified with different colours.

SHOCK ABSORBER BRACKET



1 211 502
Bolt-on



244 088
Plug-in



1 211 257
Plug-in



208 631 02 02
For welding on



1 312 110
For welding on

Shock absorber brackets for AL-KO axle links and holding bars for trailer frame (25° or 20° swing arm position)

Axle type	possible swing arm versions	Type of retrofit	Outside mounting Dimension X	Outside mounting part no. shock absorber brackets for axle links	Inside mounting dimension Y	Inside mounting part no. shock absorber brackets for axle links	Part no. holding bars for trailer frame
B 700	Solid swing arm with mounting hole	Bolt-on shock absorber brackets	20-50mm	per set = 2 units 1 211 502 (straight)	–	–	per unit 1 312 110
B 850	Hollow swing arm with mounting hole	Plug-on shock absorber brackets	40-70 mm	per unit 244 088 (straight)	0-50mm	per set = 2 units 1 211 257 (with spacer bush)	per unit 1 312 110
B 1000 B 1200	Hollow swing arm with mounting hole	Plug-on shock absorber brackets	40-70 mm	per unit 244 088 (straight)	0-50mm	per set = 2 units 1 211 257 (with spacer bush)	per unit 1 312 110
B 1600	Hollow swing arm with mounting hole	Plug-on shock absorber brackets	40-70 mm	per unit 244 088 (straight)	0-50mm	per set = 2 units 1 211 257 (with spacer bush)	per unit 1 312 110
B 1000 B 1200	Forged swing arm	Shock absorber brackets for welding on	50-80 mm	per unit 208 631 02 02 (straight)	20-60 mm	per unit 228 468 02 02 (cranked)	per unit 1 312 110
B 1600 B 1800	Forged swing arm	Shock absorber brackets for welding on	50-80 mm	per unit 208 631 02 02 (straight)	20-60 mm	per unit 228 468 02 02 (cranked)	per unit 1 312 110
B 2500	Forged swing arm	Shock absorber brackets for welding on	40-70 mm	per unit 208 631 02 02 (straight)	10-50mm	per unit 228 468 02 02 (cranked)	per unit 1 312 110

Shock absorber mounting from outside

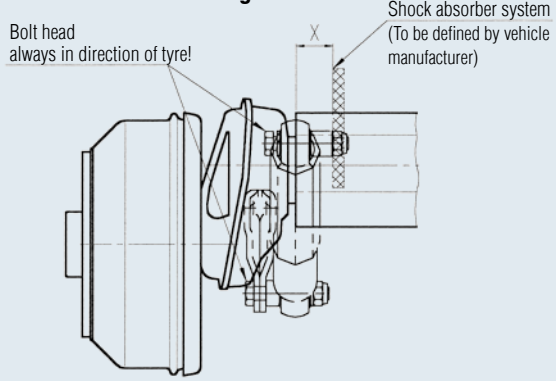

Dimension X: from outside edge of axle tube to shock absorber system

Shock absorber mounting from inside

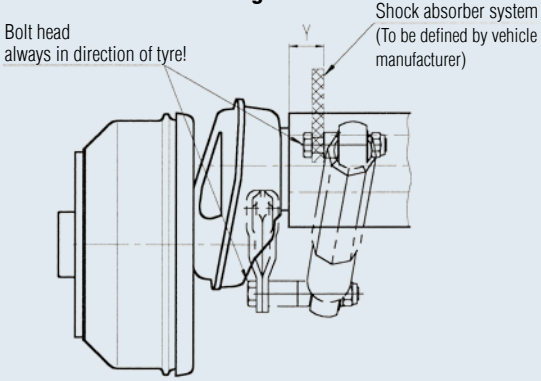

Dimension Y: from outside edge of axle tube to shock absorber system (inner side)

WHEEL BRAKES WITH AUTOMATIC REVERSE

Expanding lever actuation, for trailers more than 25 km/h

TECHNOLOGY

- All AL-KO wheel brakes are EC-tested (official characteristic value) and can be connected to the corresponding AL-KO overrun devices (allocation calculation).
- Optionally with automatic brake pad adjustment (AAA = AL-KO Automatic Adjustment) for wheel brakes 2051 and 2361.
- Install wheel brakes with the correct direction of rotation.
- The brake pads used in the wheel brakes are free of asbestos.
- The wheel brakes stated in the table are specially designed for AL-KO overrun devices. The AL-KO wheel brakes comply with ECE R13.

Please note that, for combinations with other overrun devices, the function must be checked by an allocation calculation.

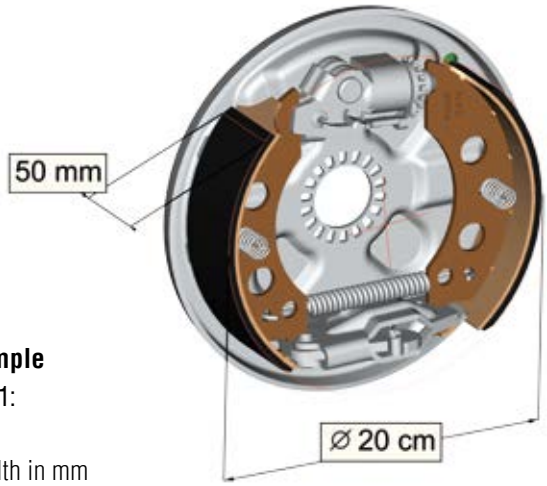

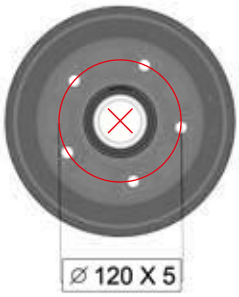

Possible wheel connections

1	100 x 4	**7**	130 x 5
2	112 x 5	**8**	140 x 5
3	98 x 4	**9**	139.7 x 4
4	130 x 4	**10**	205 x 6
5	108 x 4/5	**11**	101.6 x 4
6	120 x 5	**12**	115 x 4

Explanation example

Type number 2051:
20 = diameter in cm
50 = brake shoe width in mm

Type	Version	Perm. brake load per wheel brake kg	EC test report No.	possible wheel connections	Offset mm	Available with AAA
1636 G	a	375	361-070-92	1, 2, 3, 4, 11, 12	27 – 45	–
1636 G	b	375	361-070-92	1, 2, 3, 4, 11, 12	0	–
1637	a	500	361-0032-92	1, 2, 3, 11	27 – 33	–
1637	b	500	361-0032-92	1, 2, 3, 11	0	–
2051	Aa	650	361-0031-92	1, 2, 3, 4, 5, 6, 7, 8, 11	26 – 33	•
2051	Ab	750	361-0031-92	2, 7, 8, 9	30	•
2051	Ac	650	361-0031-92	1, 2, 3, 4, 5, 6, 7, 8, 11	0	•
2051	Ad	750	361-0031-92	2	0	•
2361		900	361-0046-97	2, 4, 6, 7, 8, 9	30	•
3062		1,500	361-047-07	10	0 – -5	–
3081	A	1,250	361-0189-97	10	0 – -5	–
3081	B	2,000	361-0189-97	10	0 – -5	–
2361 AR*		900	361-063-14	2	30	–
3062 AR*		1,500	361-062-14	10	0 – -5	–
3081 AR*	A	1,250	361-101-12	10	0 – -5	–
3081 AR*	B	2,000	361-101-12	10	0 – -5	–

* for trailers with pneumatic brakes



1636 G



1637



2051



2361



3062



3081

	External transmission ia	Path transmission ig	Brake application stroke SB	Characteristic value kB (m)	Application force (N) Po	Corresponding tyre radius (m) R_{min} / R_{max}	Max. perm. brake torque (Nm)
	3.80	15.85	1.520	0.540	-70	0.260 – 0.300	750
	3.80	15.85	1.520	0.520	-50	0.210 – 0.255	750
	4.00	15.85	1.520	0.530	-80	0.260 – 0.303	1,150
	4.00	15.85	1.520	0.480	20	0.210 – 0.259	1,100
	4.00	15.55	1.600	0.839	20	0.270 – 0.321	1,460
	4.00	15.55	1.600	0.720	0	0.280 – 0.321	1,700
	4.00	15.55	1.600	0.824	15	0.210 – 0.269	1,300
	4.00	15.55	1.600	0.746	20	0.215 – 0.280	1,460
	4.00	16.40	1.660	0.800	0	0.253 – 0.360	2,200
	4.00	17.44	1.800	0.966	25	0.310 – 0.389	4,200
	4.00	17.44	1.800	0.936	135	0.310 – 0.400	3,500
	4.00	17.44	1.800	1.165	54	0.360 – 0.480	6,700
	4.00	16.40	1.660			0.253 – 0.321	
	3.62	15.80	1.800			0.389 tested	
	4.00	17.44	1.800			0.371 tested	
	4.00	17.44	1.800			0.371 tested	

PROFI LONG-LIFE AXLE BOWDEN CABLES

Advantages

AL-KO offers the highest quality for vehicle trailers

Trailers need to be able to do their job reliably come wind or weather, under all operating conditions.

The Bowden cables that are decisive for the brake function have to withstand a lot of stress.
AL-KO is setting the standard with its long-life Bowden cables. Longest possible service life with improved function. The optimised structure enables them to withstand even the toughest environmental conditions without difficulty.

YOUR ADVANTAGE
Perfect protection

- The metal-reinforced internal spiral is protected by a **polymer sheath made of PA 12** (polyamide 12. This material is extremely resistant to salt water as well as other substances. This material is even used successfully as protective sheathing for offshore pipelines of oil platforms as well as for petrol pipelines.
- The end pieces of the Bowden cables are additionally provided with a **zinc/nickel coating**, so that rust simply cannot gain a foothold.
- The transition from the jacketed steel wire to the cable is provided with an **exactly fitting elastomer grommet.** This effectively prevents penetration of water, salt and other aggressive, harmful liquids.

Up to 5% better efficiency

In turn, the steel cable sheathed with PA 12 runs within another PVC hose. **This means plastic runs on plastic, enabling the sliding properties to be optimised as well**.
In simple terms: efficiency is boosted by up to 5% across the entire temperature range.

Important: Only single types of Bowden cables are allowed to be used!

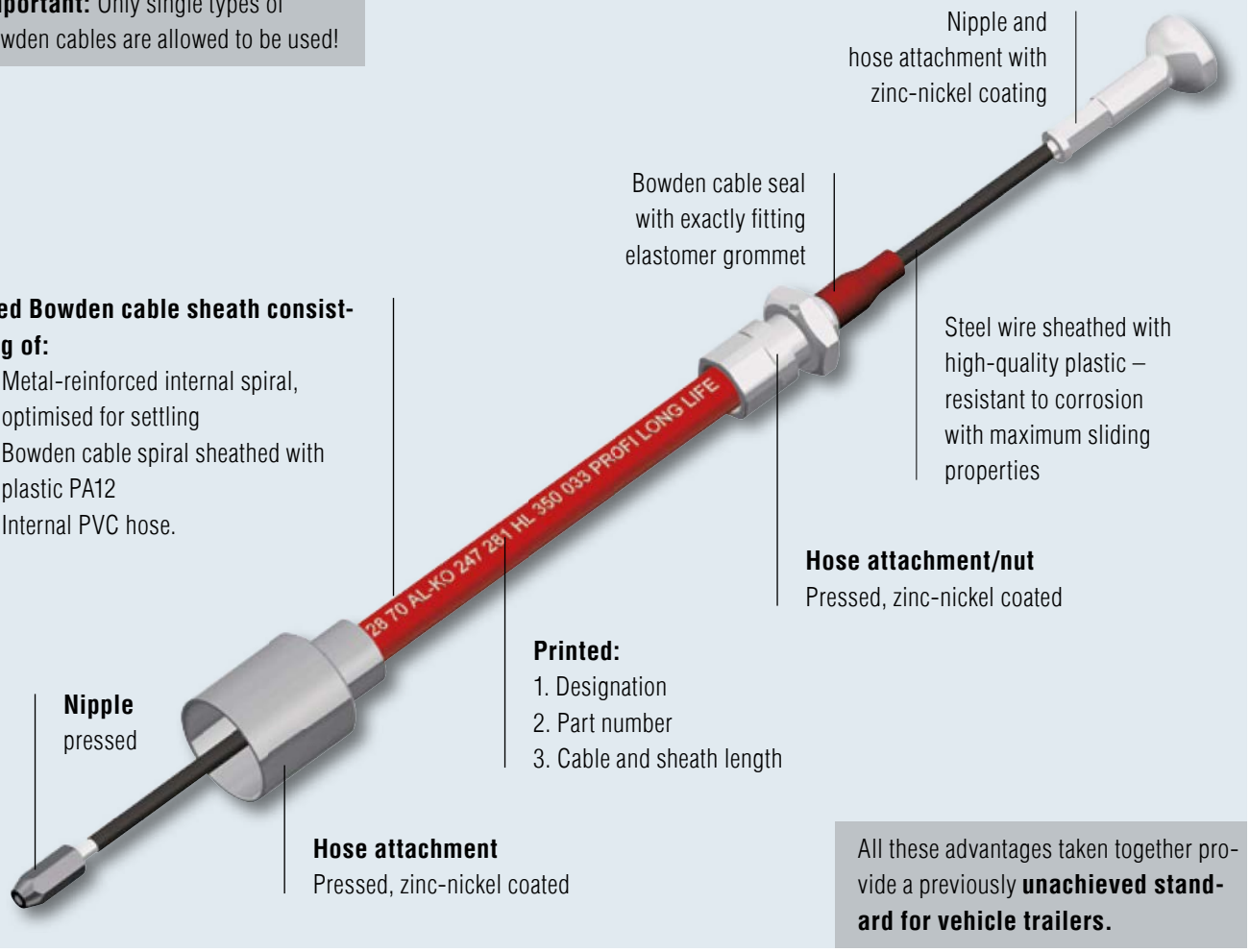

Red Bowden cable sheath consisting of:

- Metal-reinforced internal spiral, optimised for settling
- Bowden cable spiral sheathed with plastic PA12
- Internal PVC hose.

All these advantages taken together provide a previously **unachieved standard for vehicle trailers.**





Quick-mounting Bowden cable (1636G, 1637, 2051, 2361)

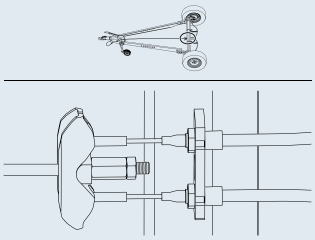

Quick mounting on the Bowden cable compensation bar For wheel brakes 1636G, 1637, 2051, 2361

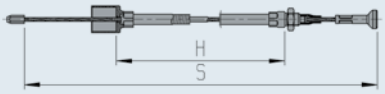



Variant with thread

SAP: BOWDZUG 500/ 760 KPL

Normal mounting 3062, 3081

OHF mm from to	With fixing bolts	Without fixing bolts	Sheath H mm	Cable S mm
Single axle trailer				
up to 1310	246 489	241 106	500	760
1310 – 1710	246 490	241 107	800	1,060
1710 – 1910	246 491	241 108	900	1,160
1910 – 2110	246 492	241 109	1,000	1,260
2110 – 2310	246 493	241 110	1,100	1,360
2310 – 2610	246 494	241 111	1,300	1,560
2610 – 2810	246 495	241 112	1,400	1,660
Tandem front axle				
up to 1470	246 489	241 106	500	760
1470 – 1870	246 490	241 107	800	1,060
1870 – 2070	246 491	241 108	900	1,160
2070 – 2270	246 492	241 109	1,000	1,260
2270 – 2470	246 493	241 110	1,100	1,360
2470 – 2770	246 494	241 111	1,300	1,560
2770 – 2970	246 495	241 112	1,400	1,660
Tandem rear axle centre distance up to 700 mm				
up to 1470	246 493	241 110	1,100	1,360
1470 – 1910	246 494	241 111	1,300	1,560
1910 – 2110	246 495	241 112	1,400	1,660
2110 – 2810	246 496	241 113	1,600	1,860

SAP: BOWDZ COM 350/ 546 PROFI LONG LIFE

Quick mounting 1636G, 1637, 2051, 2361

OHF mm from to	Without fixing bolts	Sheath H mm	Cable S mm	
Single axle trailer				
up to 940	247 281	350	546	20
940 – 1260	247 282	530	726	20
1260 – 1680	247 283	770	966	20
1680 – 1880	247 284	890	1,086	20
1880 – 2100	247 285	1,020	1,216	20
2100 – 2340	247 286	1,130	1,326	20
Tandem front axle				
up to 1110	247 281	350	546	20
1110 – 1430	247 282	530	726	20
1430 – 1850	247 283	770	966	20
1850 – 2050	247 284	890	1,086	20
2050 – 2270	247 285	1,020	1,216	20
2270 – 2510	247 286	1,130	1,326	20
Tandem rear axle centre distance up to 700 mm				
up to 1620	247 286	1,130	1,326	20
1620 – 2020	247 287	1,320	1,516	20
2020 – 2360	247 288	1,430	1,626	20
2360 – 2720	247 289	1,620	1,816	20
2720 – X	247 290	1,790	1,986	20

BOWDEN CABLE HOLDERS

YOUR ADVANTAGE

- Moisture that penetrates can escape.
- Freezing up is prevented.
- The function of the brake system is permanently maintained, especially when usingPROFI long-life axle Bowden cables.
- No Bowden cable sagging.
- No oscillation, and therefore no undesired, gentle braking while driving.





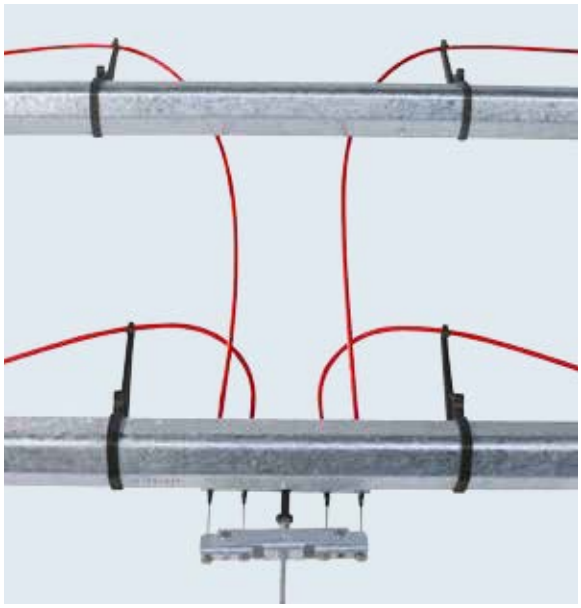

SAP: BOWDENZUGHALTER ACHSPR 97/45°

Part no. Units	Part no. 10 units packaged	for axles	Suspension	Axle profile Ø mm	Type from year of manufacture	Colour			
–	1 222 503	AL-KO	Hexagonal rubber suspension	97 mm	Compact up to YoM 1994 Plus up to YoM 1998	Black	0.6	10	–
691 853	1 222 113	AL-KO	Hexagonal rubber suspension	97 mm	Compact from YoM 1995 Plus from YoM 1999	Black	0.6	10	100
692 045	1 222 114	AL-KO	Hexagonal rubber suspension	80 mm	Compact from YoM 1995 Plus from YoM 1999	Black	0.6	10	100
692 047	1 222 115	AL-KO	Hexagonal rubber suspension	110 mm	Plus from YoM 1999	Black	0.6	10	100
691 892	1 222 116	Others	Square	80 mm		Black	0.6	10	100

BOLT-ON TANDEM ADAPTER BRACKET

Tandem adapter bracket, bolt-on
Hot-dip galvanised, up to 3,500 kg
Part no.:
249 236



Important!
Install adapter bracket behind the axle in the driving direction (old adapter bracket in front of the axle)

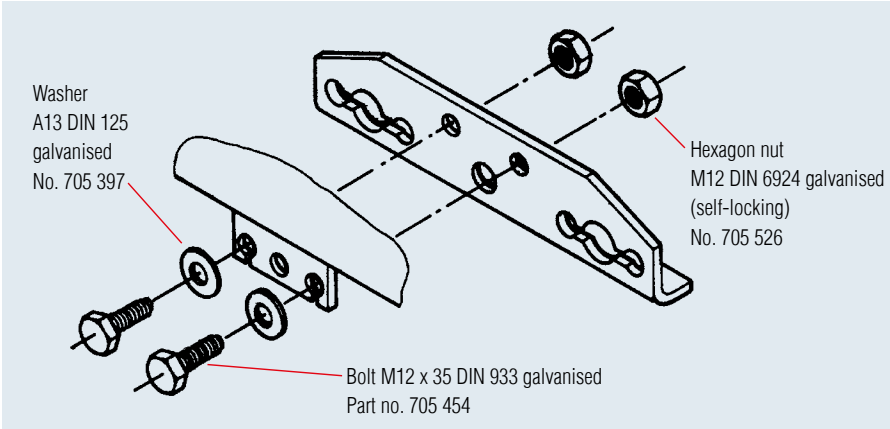

Tandem compensation
Hot-dip galvanised, up to 3,500 kg
Part no.:
238 576

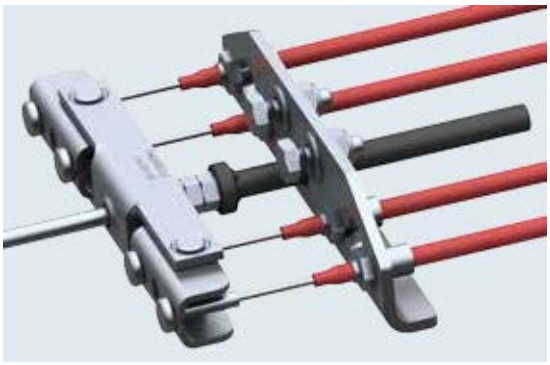

WHEEL BOLTS AND WHEEL NUTS

TECHNOLOGY

Wheel attachment: Attachment for safe operation is largely dependent on matching the hubs and wheel connections as well as using the right fastening components with the prescribed tightening torque.

It is essential to coordinate the data of the axle, i.e. wheel connection and offset as well as the data of the wheel bolt, with your rim and tyre manufacturer.

SURFACE TREATMENT

- Galvanised



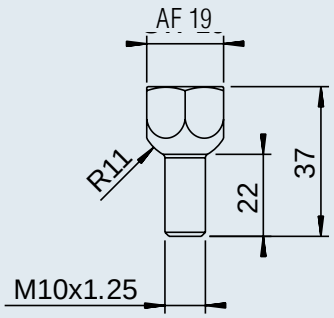

Ball-head wheel bolt M10 x 1.25	
SAP: SHR RAD- KUG- M10X1,25X22	
Part no.	208 892 00 10
Wrench size	AF 19
Bolt quality	8.8
Maximum permitted tightening torque	52 Nm



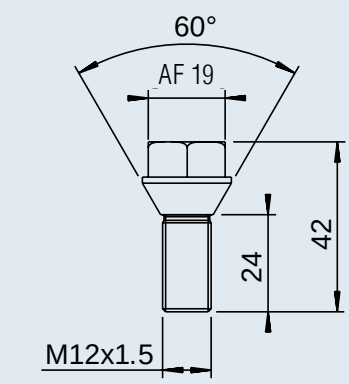

Taper-head wheel bolt M12 x 1.5	
SAP: SHR RAD- KEG- M12X1,5X24	
Part no.	208 167 00 18
Wrench size	AF 19
Bolt quality	8.8
Maximum permitted tightening torque	90 Nm



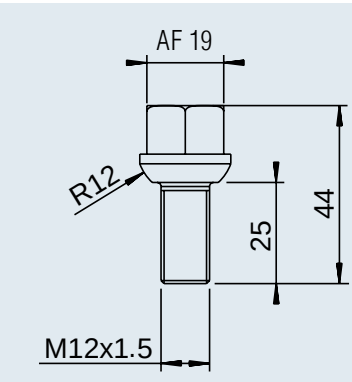

Ball-head wheel bolt M12 x 1.5	
SAP: SHR RAD- KUG- M12X1,5X25	
Part no.	208 167 00 20
Wrench size	AF 19
Bolt quality	8.8
Maximum permitted tightening torque	90 Nm



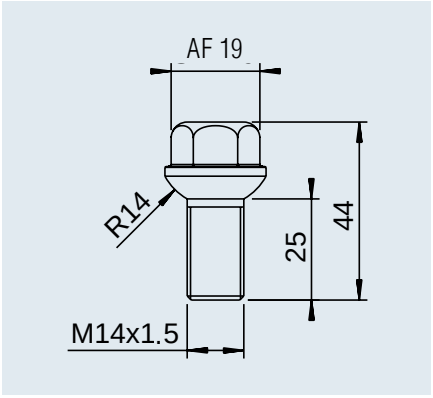

Ball-head wheel bolt M14 x 1.5	
SAP: SHR RAD- KUG- M14X1,5X25 ZN12A	
Part no.	208 167 00 02
Wrench size	AF 19
Bolt quality	8.8
Maximum permitted tightening torque	150 Nm



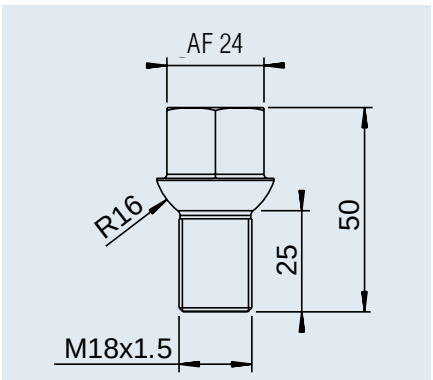

Ball-head wheel bolt M18 x 1.5	
SAP: SHR RAD- KUG- M18X1,5X25	
Part no.	218 568 00 06
Wrench size	AF 24
Bolt quality	8.8
Maximum permitted tightening torque	325 Nm



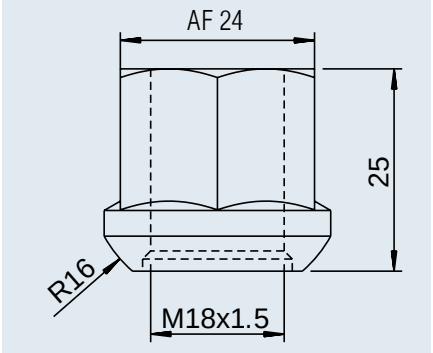

Wheel nut M18 x 1.5	
SAP: MU 74361-A18- 8 A3B (M18X1,5)	
Part no.	701 202
Wrench size	AF 24
Bolt quality	8.8
Maximum permitted tightening torque	325 Nm

WHEEL BRAKE FLUSHING SYSTEM

for boat trailers

YOUR ADVANTAGE

After boat trailers have been immersed in salt water, salt residues crystallise on the inside of the wheel brake. Unless these are removed by flushing with fresh water, increased corrosion will be inevitable, resulting in malfunctions.

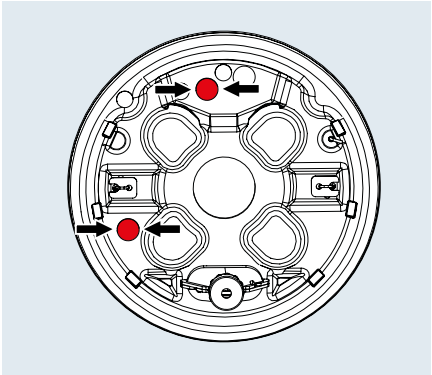

INITIAL EQUIPMENT MOUNTING

Can be used on bolt-on AL-KO wheel brakes type 1637/2051/2361/3062.

The brake back plate is provided with two corresponding threaded holes for the ¼" push-in screw connection by AL-KO when you order your axle.

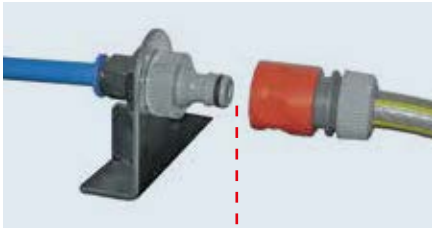

OPERATION

Connect fresh water hose to the coupling piece, then flush with fresh water for about 5 minutes.



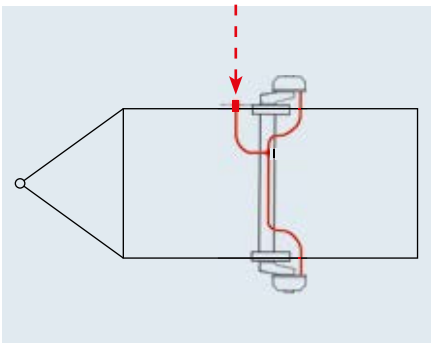

Wheel brake flushing system single axle	
SAP: RADBREMSENSPÜLUNG EA	
Part no.	1 362 447
Can be used for AL-KO wheel brakes	1637 / 2051 2361 / 3062
	0.9 kg
	10 units –



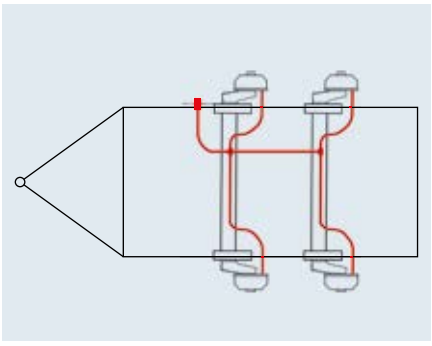

Wheel brake flushing system tandem	
SAP: RADBREMSENSPÜLUNG TA	
Part no.	1 362 448
Can be used for AL-KO wheel brakes	1637 / 2051 2361 / 3062
	1.0 kg
	10 units –

AL-KO AAA PREMIUM BRAKE

The high-performance brake

THE PREMIUM BRAKE THAT ADJUSTS AUTOMATICALLY

- Suitable for AL-KO wheel brakes, and thus for most trailers with AL-KO axles
- The proven wheel brakes with their braking values far above the average are supplemented by the automatic adjustment function
- When driving in reverse, adjustment is deactivated to prevent the brake from locking up
- Easy changeover to the latest technology via a pre-assembled system (AL-KO screw system)

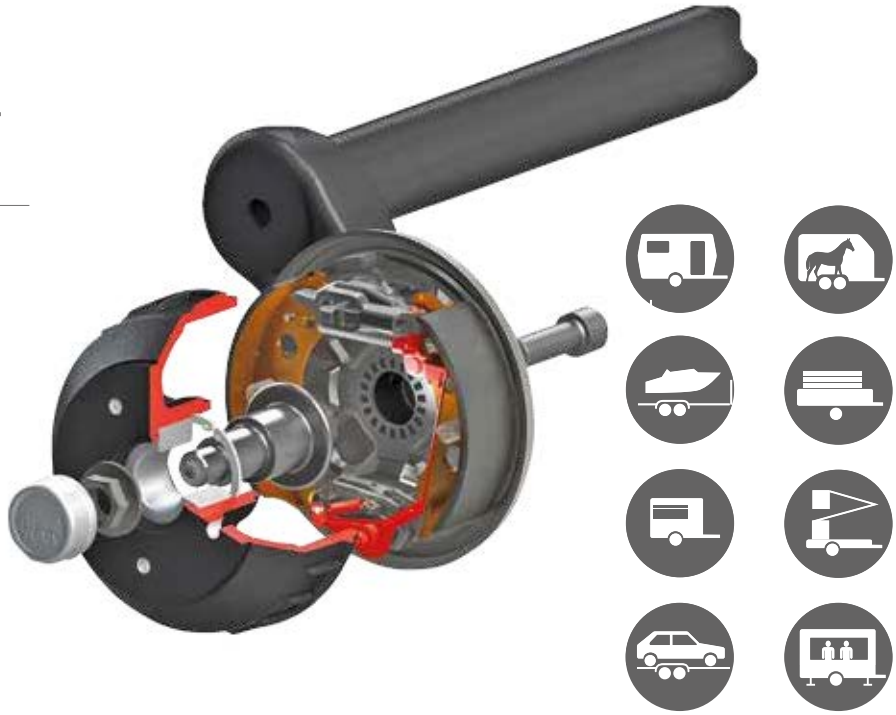

BRAKING DISTANCE IS TIME

As soon as the brake has excess play, the AAA automatically readjusts. This means the brake system is always optimally adjusted, so you save valuable braking distance in a dangerous situation.
E.g. car with caravan perm. gross weight 1,500 kg:



Braking from 100 km/h with poorly adjusted brake system: 79 m

Braking from 100 km/h with optimally adjusted brake system: 74 m
= 5 m shorter braking distance = 1 vehicle length!

Braking distance 79 m

AL-KO AAA **Braking distance 74 m**

THE ADVANTAGES FOR YOU

- **Greater driving safety** by a braking distance up to 5 m shorter
- **Greater ride comfort** through smooth braking without jolting when setting off
- **Lower maintenance costs due to extended service intervals and dispensing with the first workshop visit after 1000 km**
- No renewed presentation to TÜV required following installation
- **Tip:** Change over to the AAA Premium Brake the next time you change your brake pads, if not before



SCOPE OF DELIVERY



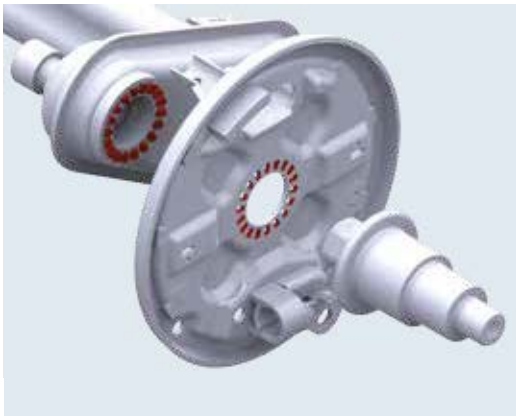

Retrofit set AAA for wheel brake 2051 version with toothed profile	
Part no.	1 730 026
SAP	UMRÜSTSET RB 2051 AAA
can be used with	Wheel brake 2051 from year of manufacture 1999 version with toothed profile
	7.6 kg
	– 36 units



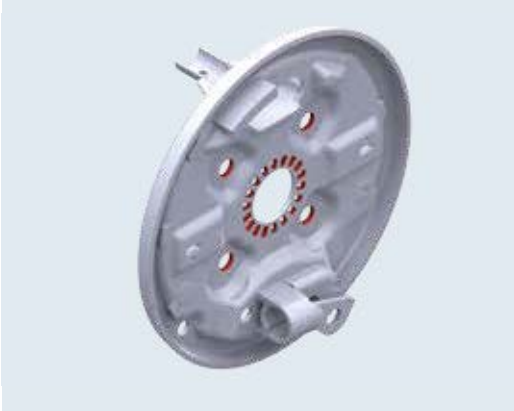

Retrofit set AAA for wheel brake 2051 version with toothed profile with 4 holes	
Part no.	1 730 255
SAP	UMRÜSTSET RB 2051 4-LOCH AAA
can be used with	Wheel brake 2051 from year of manufacture 1999 version with toothed profile with 4 holes
	7.6 kg
	– 36 units

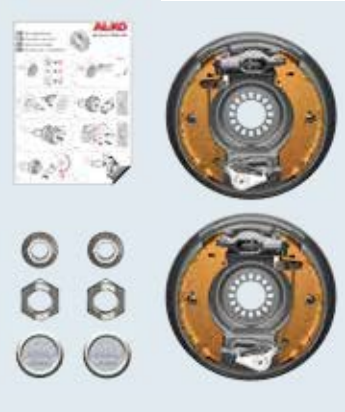



Retrofit set AAA for wheel brake 2361 version with toothed profile	
Part no.	1 730 298
SAP	UMRÜSTSET RB 2361 AAA
can be used with	Wheel brake 2361 from year of manufacture 1999 version with toothed profile
	10.4 kg
	– 36 units

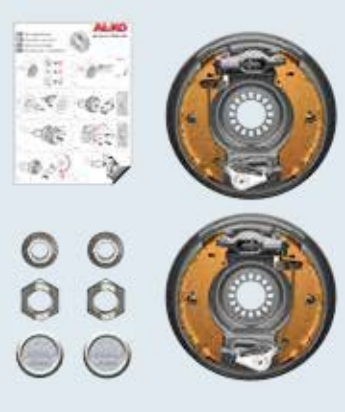



Retrofit set AAA for wheel brake 2361 version with toothed profile with 4 holes	
Part no.	1 730 299
SAP	UMRÜSTSET RB 2361 4-LOCH AAA
can be used with	Wheel brake 2361 from year of manufacture 1999 version with toothed profile with 4 holes
	10.4 kg
	– 36 units

5. CHASSIS

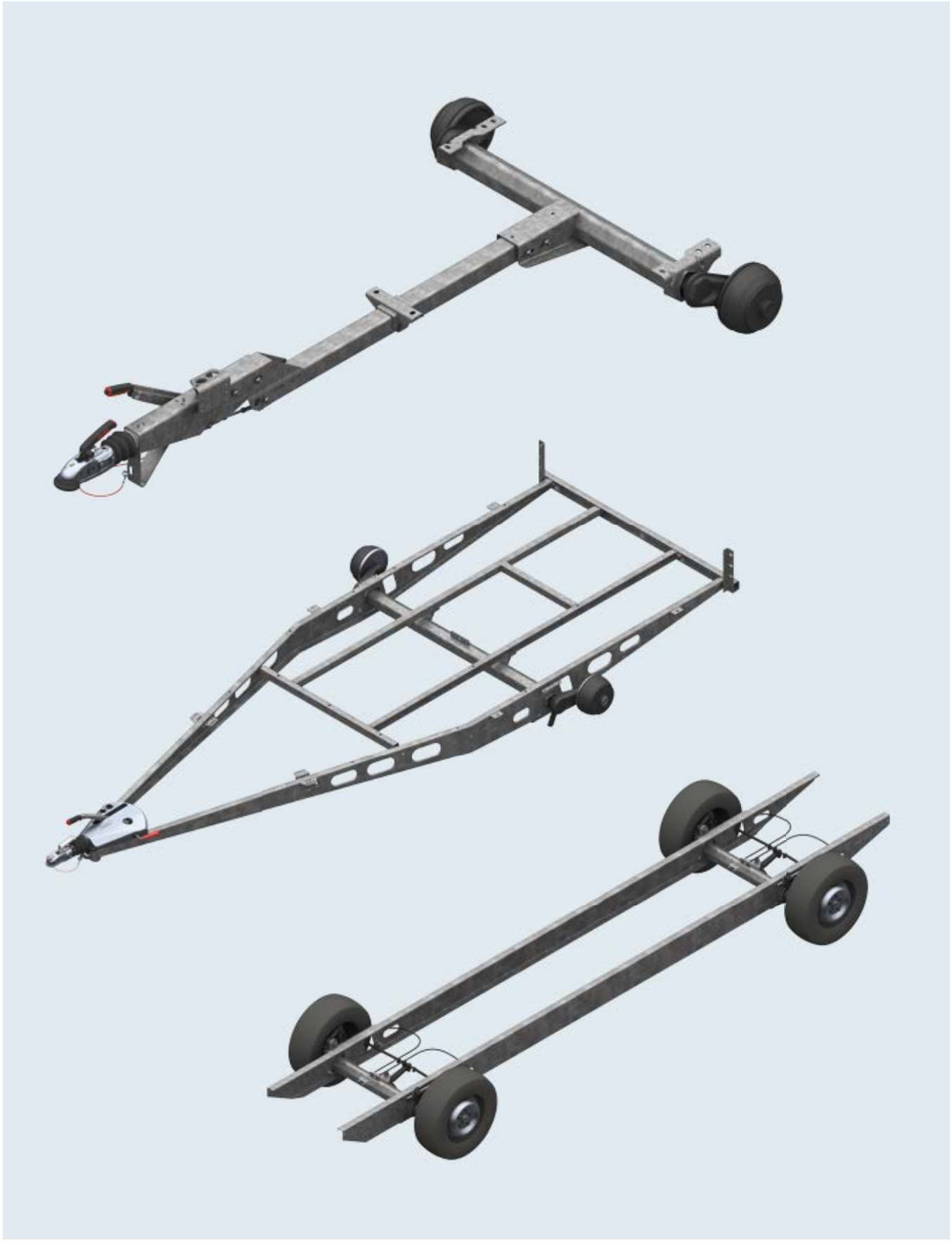

CHASSIS

T-pole chassis	308 – 312
A-frame chassis	314 – 332
Steering chassis	334 – 341

T-POLE CHASSIS STRAIGHT AND CRANKED

Optimized down to the smallest detail



A skid bracket with integrated breakaway cable guide protects the hitch against contamination. The breakaway cable is also guided smoothly, so the emergency brake really does function in an emergency.



Jockey wheel flange welded on as standard.

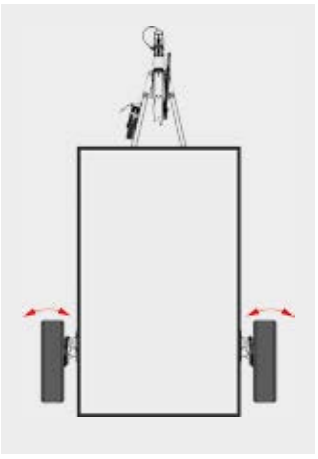

Toe-in can be adjusted precisely at the factory for minimum tyre wear.



Maintenance-free compact bearing.



Quick-fit compensation profile reduces assembly time.

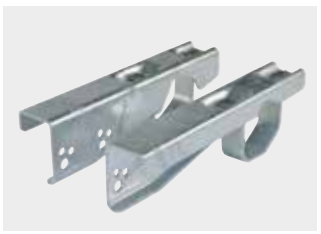

Chassis can be combined from stocked components using clamping drawbar connection profiles.



Brake rod holder. The brake rod is cleanly guided, the brake system only acts if an overrun travel has built up and the braking is really needed.



7 and 13-pin plug holder for secure storage of the electric plug when stationary.



Extremely sturdy brake backing plate to prevent deformation on overload.



Hook-in Bowden cable saves assembly time.

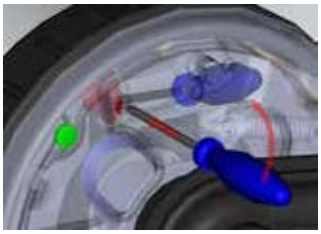

Wheel brake adjustment convenient for service.



Plug-in shock absorber brackets. For axles with hollow swing arm. This equates to trouble-free retrofitting without welding.



Better heat dissipation thanks to brake drums with cooling ribs.



T-POLE CHASSIS

SA 750 kg, without frame

T-pole chassis, 750 kg unbraked	
Part no.	1 422 807
Gross weight	750 kg
	40 kg
	On request

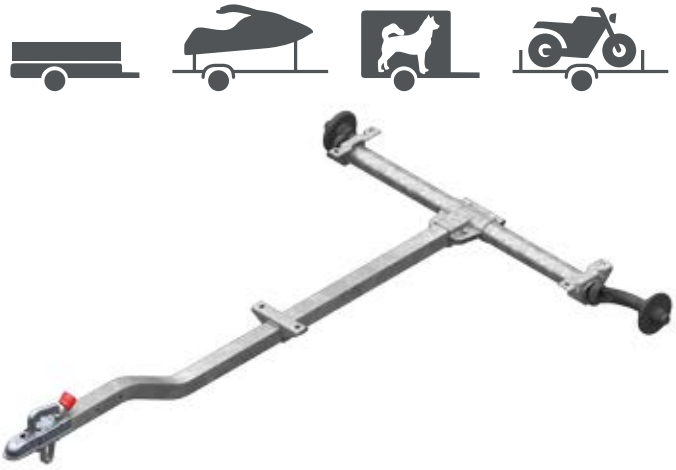

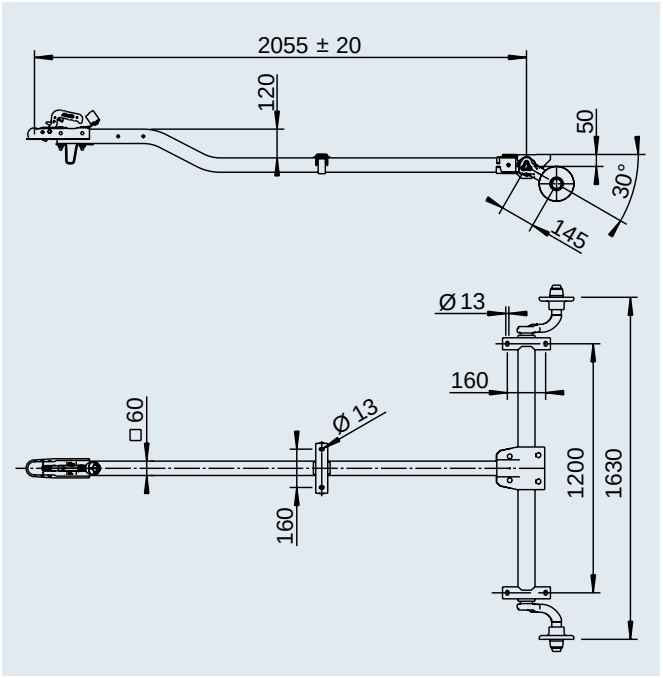

T-pole chassis, 750 kg, height-adjustable, unbraked	
Part no.	1 422 808
Gross weight	750 kg
	48 kg
	On request

Matching drawbar eyes, see chapter 2



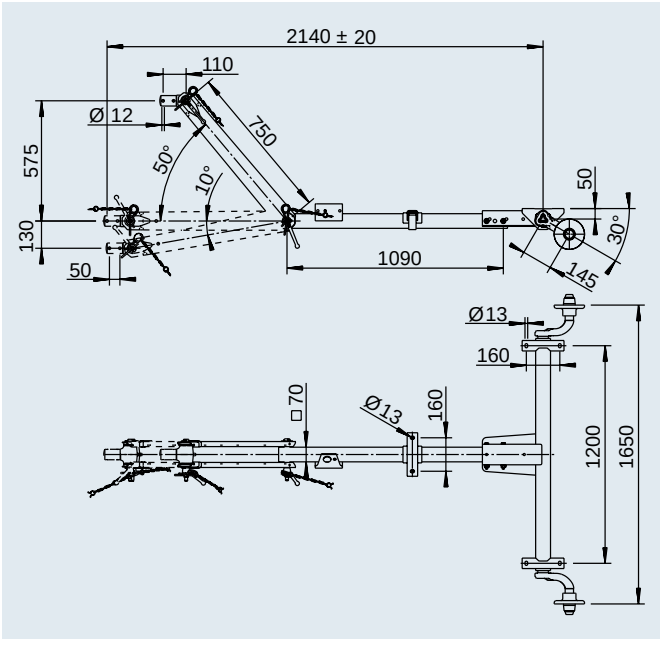

T-POLE CHASSIS

SA 1,000 kg, without frame

T-pole chassis, braked		
Part no.	1 422 809	1 422 810
Gross weight	1,000 kg	1,350 kg
	76 kg	84 kg
	On request	

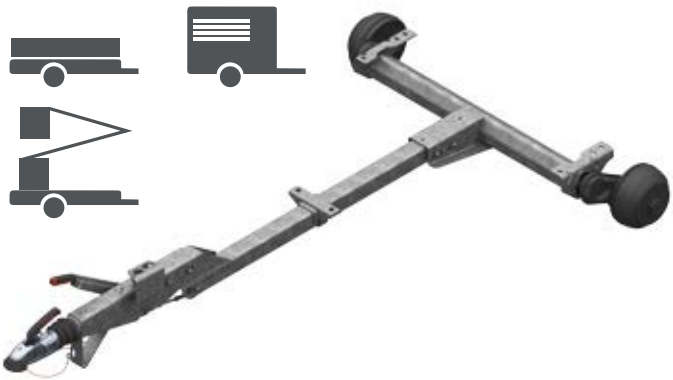

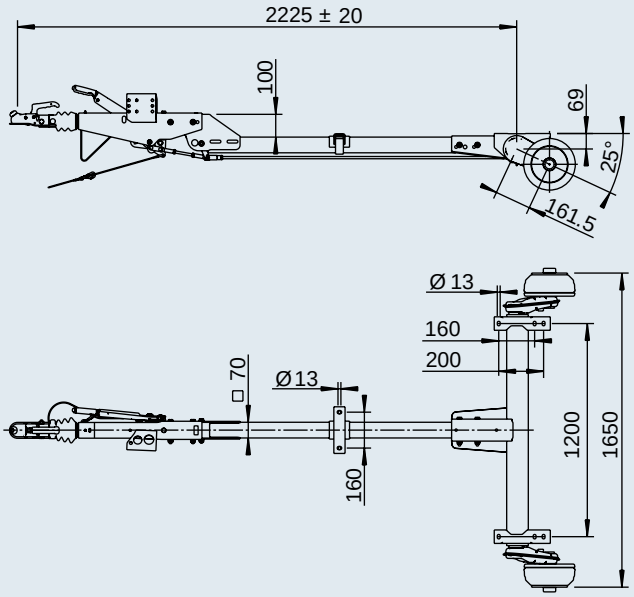

T-pole chassis, height-adjustable, braked			
Part no.	1 422 811	1 422 812	1 422 813
Gross weight	1,000 kg	1,500 kg	1,800 kg
	132 kg	138 kg	179 kg
	On request		

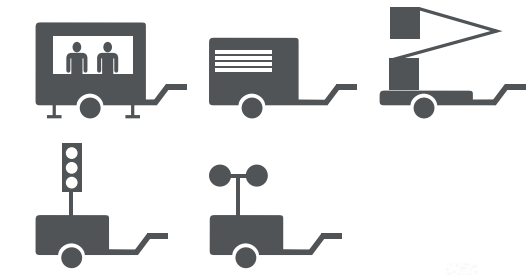



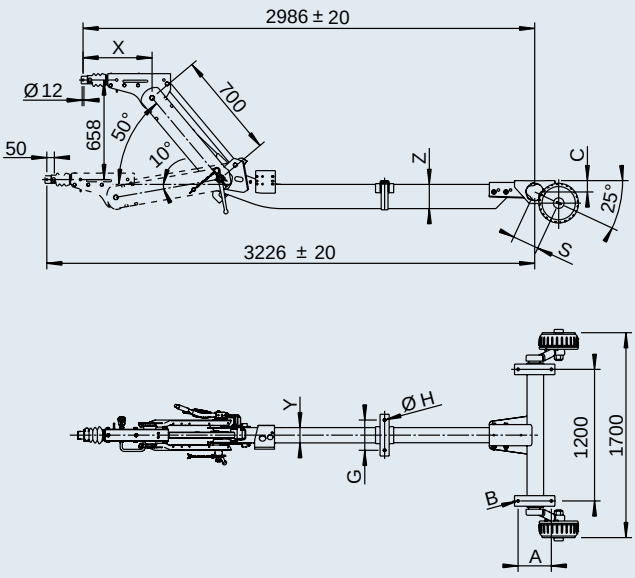

Matching drawbar eyes, see chapter 2

Type	X	Y	Z	A	B	C	G	H	S
101 VB	253	70	140	160	13x20	69	160	13	161.5
161 VB-2	457	80	140	160	13x20	69	160	13	161.5
251 VB-2	457	100	160	220	Ø 18	75	200	18	175

T-POLE CHASSIS

TA 3,500 kg, without frame

T-pole chassis, height-adjustable, braked	
Part no.	1 730 763
Gross weight	3,500 kg
	216 kg
	On request



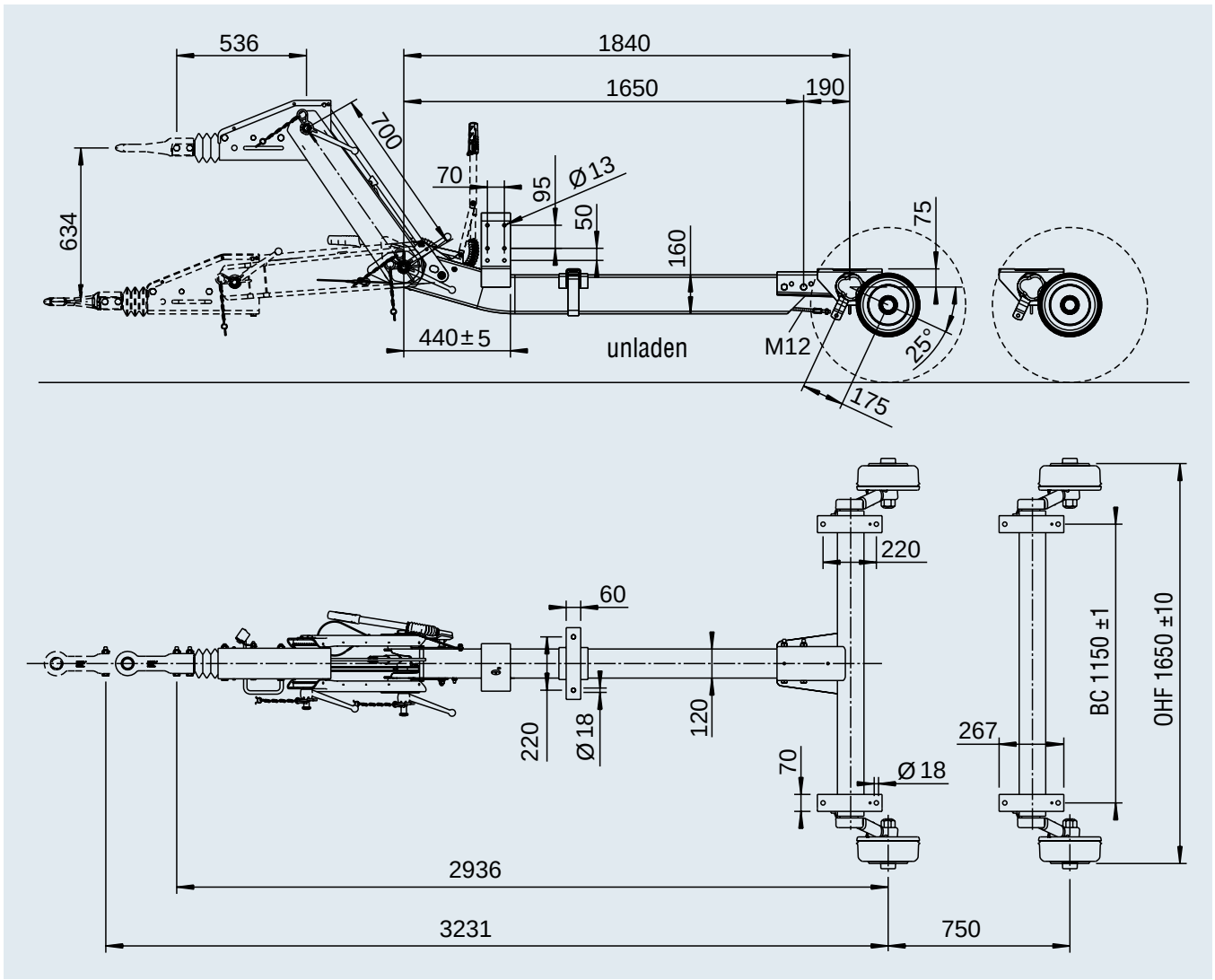

A-FRAME CHASSIS

Optimized down to the samallest details



Clamping towbar connection brackets enable chassis to be combined from stocked components.



A skid bracket protects the hitch against contamination from ground contact. Furthermore, it ensures that the function of the emergency brake via the breakaway cable is guaranteed.



The screw-on jockey wheel carrier enables central mounting of the jockey wheel (important: when operating the jockey wheel, make sure that the wheel cannot bend the brake rod).



Bolt-on spacers
enable the hitch height to be corrected by a maximum of 70 mm.



Brake rod holder. The brake rod is cleanly guided, the brake system only acts if an overrun travel has built up and the braking is really needed.



7 and 13-pin plug holder
for secure storage of the electric plug when stationary.

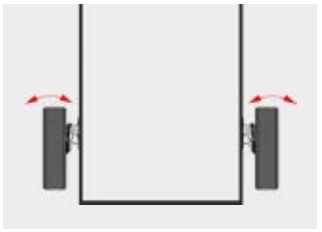

Toe-in can be adjusted precisely at the factory for minimum tyre wear.



Maintenance-free compact bearing.



Extremely sturdy brake backing plate to prevent deformation on overload.



Quick-fit compensation profile reduces assembly time.



Cover bracket and cover plate for additional torsional rigidity.



Breakaway cable guide fitted as standard so that the emergency brake really does function.



Hook-in Bowden cable saves assembly time.

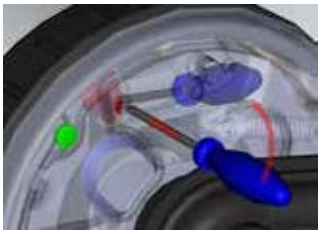

Wheel brake adjustment convenient for service.



Plug-in shock absorber brackets. For axles with hollow swing arm. This equates to trouble-free retrofitting without welding.



Better heat dissipation thanks to brake drums with cooling ribs.





AL-KO CHASSIS

with and without lightweight frame system

YOUR ADVANTAGE

AL-KO is a leader in developing and producing high-quality chassis components for privately and commercially used trailers in the weight range up to 3,500 kg permitted gross weight.

The following pages present chassis variants for various applications. In general, it should be noted that the configuration of the chassis frame should be undertaken in close consultation with the vehicle manufacturer.

The body type (e.g. panel / dropside), the floor construction and the frame must be matched with one another. Only in this way can a trailer with optimised weight and cost be achieved.
Please contact us so that we can adapt the frame to your specific application in terms of weight and cost.

AL-KO bolted lightweight system frame "system advantages"

- Increased payload for the trailer owner thanks to the weightoptimised overall body design.
- Lower short and long-term costs (less use of material, low galvanisation weight).

Batch sizes / prices for frame chassis

We achieve a good price/performance ratio and delivery deadline with a minimum order quantity of 5 items per article number. As a result, we recommend that you do not order less than this minimum production batch size.



The various frame components are bolted together using a special bolting process ("pot bolting"). This technology guarantees you a reliable, positive-locking and thus safe connection between the various frame components throughout the entire service life of your trailer.

The bolting system enables you to exchange individual frame components during servicing.



Certain frame components are provided with holes for reducing weight, i.e. we save weight in non-critical areas of the frame (neutral zone). During this production step, the holes for reducing weight are deep-drawn, i.e. the edge areas are shaped to ensure as little loss of stability as possible.

We process lightweight, high-quality fine-grained steel with high strength and a high yield point. The surface is hot-dip galvanised.

ENQUIRY FOR HIGH- AND LOW-LOADER CHASSIS

IMPORTANT!
The chassis illustrated below are standard versions. We will be happy to deal with your individual enquiry. Please use this enquiry form. Please send the completed questionnaire to your responsible contact in Sales. You will receive an offer from them.

FLOOR

Floor length and width	mm
Number and spacing of cross members	mm
Material thickness of the floor panel	mm
Height from the road to the top edge of the frame at nominal load	mm

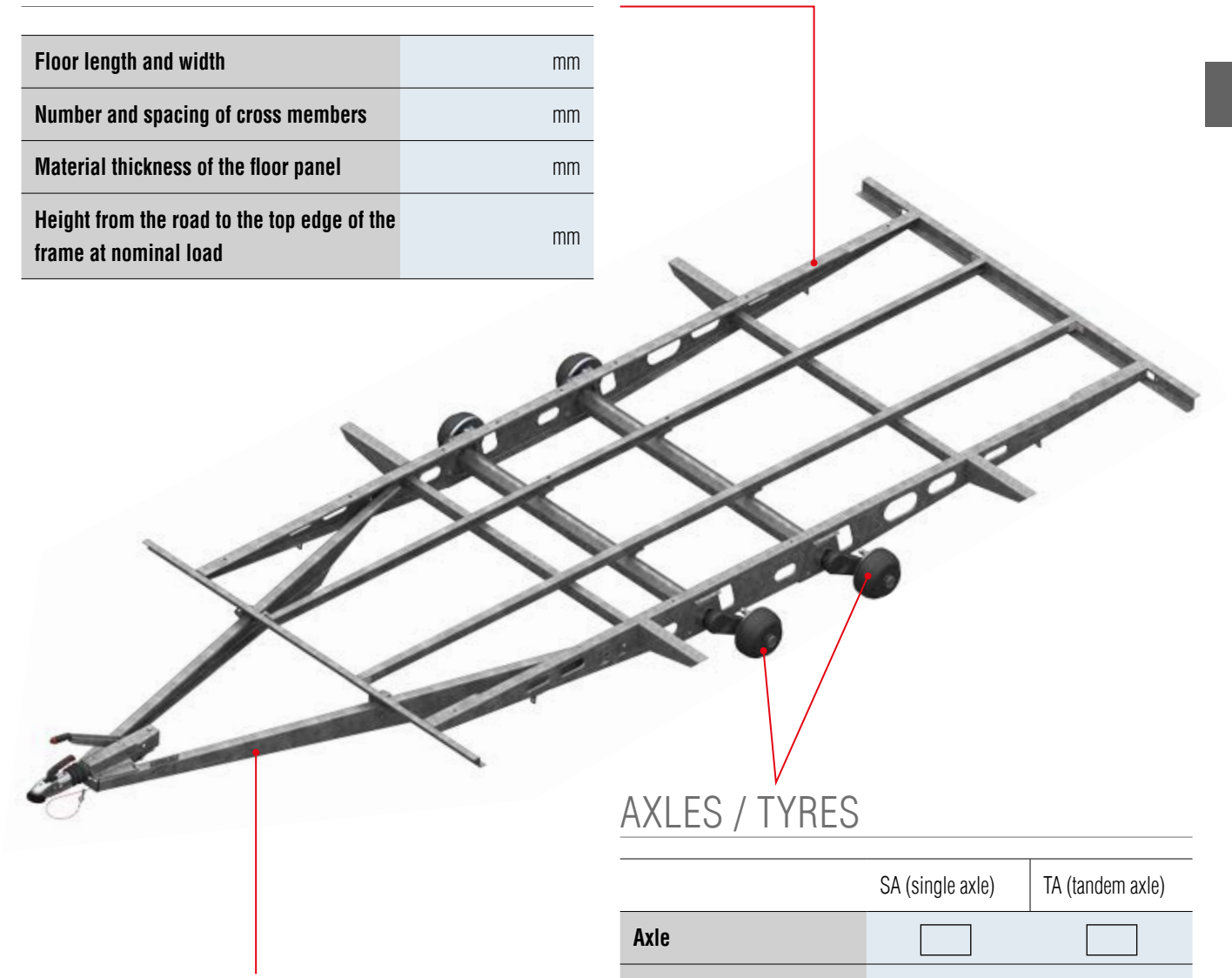

GENERAL INFORMATION

	Panel	Dropside
Body	☐	☐
Permitted gross weight (GA)		kg
Free drawbar length		mm

AXLES / TYRES

	SA (single axle)	TA (tandem axle)
Axle	☐	☐
BC / OHF / track		mm
Tyre size		mm
Wheel connection		
Rim offset		mm
Wheel bolts	Ball ☐ Taper ☐	

LOW-LOADER CHASSIS

SA 500 kg, with frame

Chassis for unbraked trailers	
Part no.	1 227 255
Gross weight	500 kg
	31 kg
	On request



Minimum order quantity per date and item number is 5 pieces.

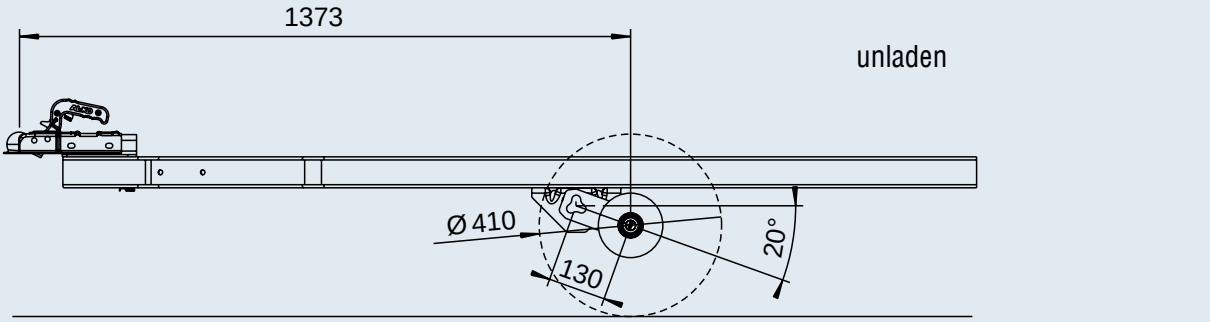

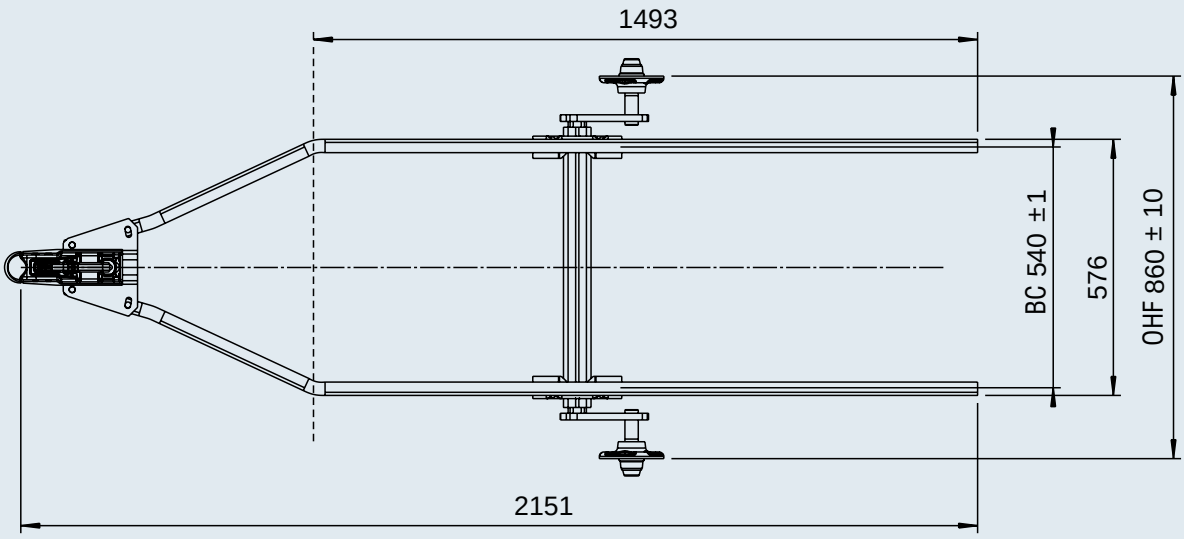

LOW-LOADER CHASSIS

SA 750 kg, with frame

Chassis for polyester bodies, e.g. for transporting motorcycles	
Part no.	1 422 968
Gross weight	750 kg
	95 kg
	On request

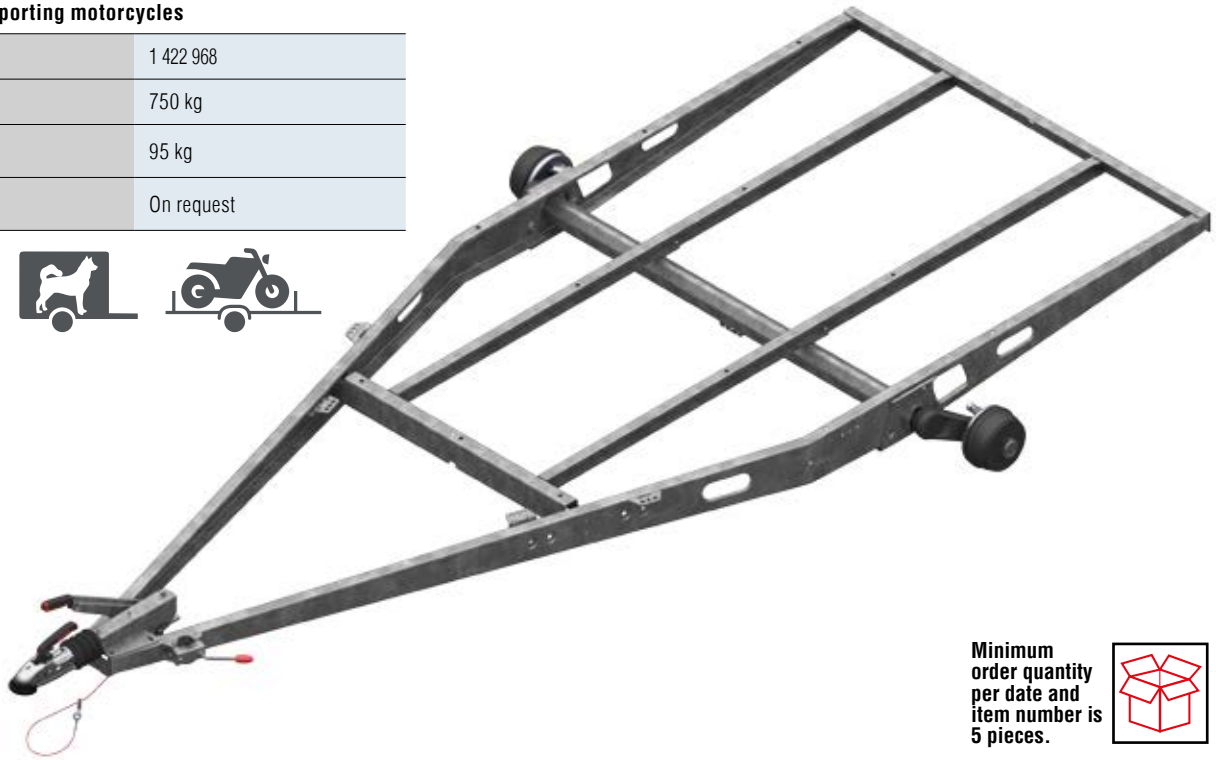

Minimum order quantity per date and item number is 5 pieces.

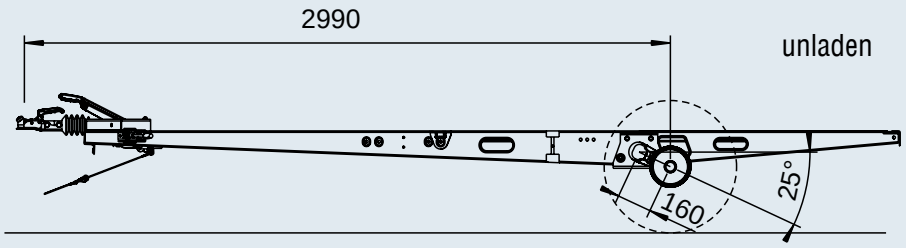

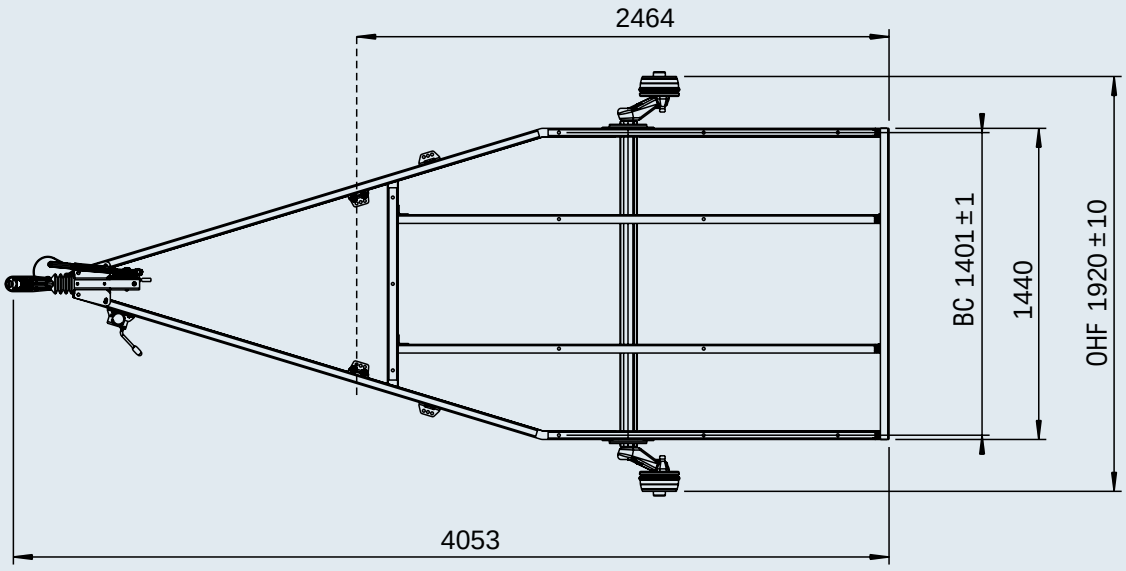

LOW-LOADER CHASSIS

SA 1,500 kg, with frame

Chassis for polyester bodies, e.g. for transporting motorcycles	
Part no.	1 422 457
Gross weight	1,500 kg
	139 kg
	On request

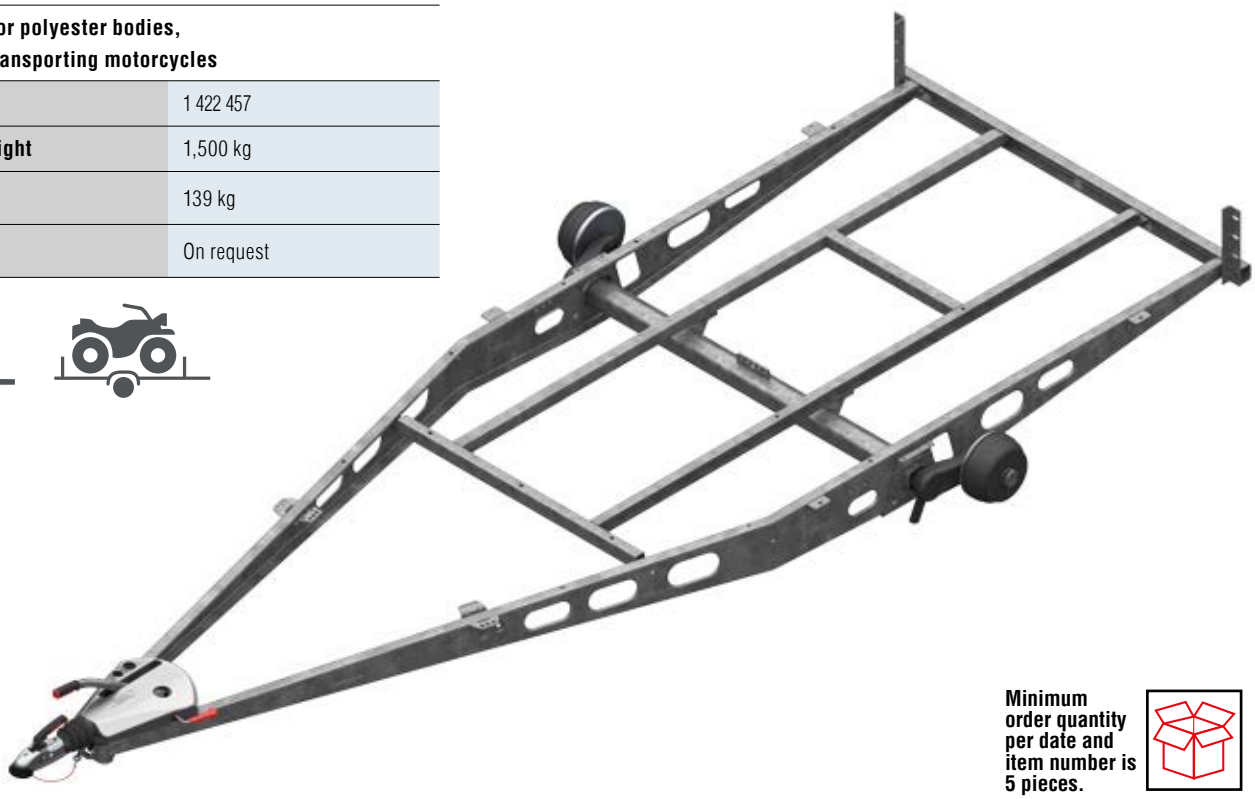

Minimum order quantity per date and item number is 5 pieces.

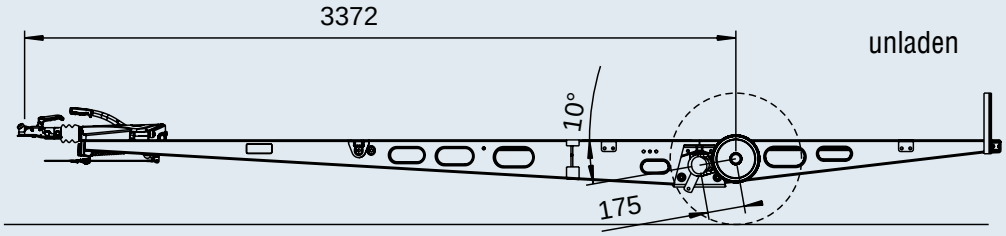

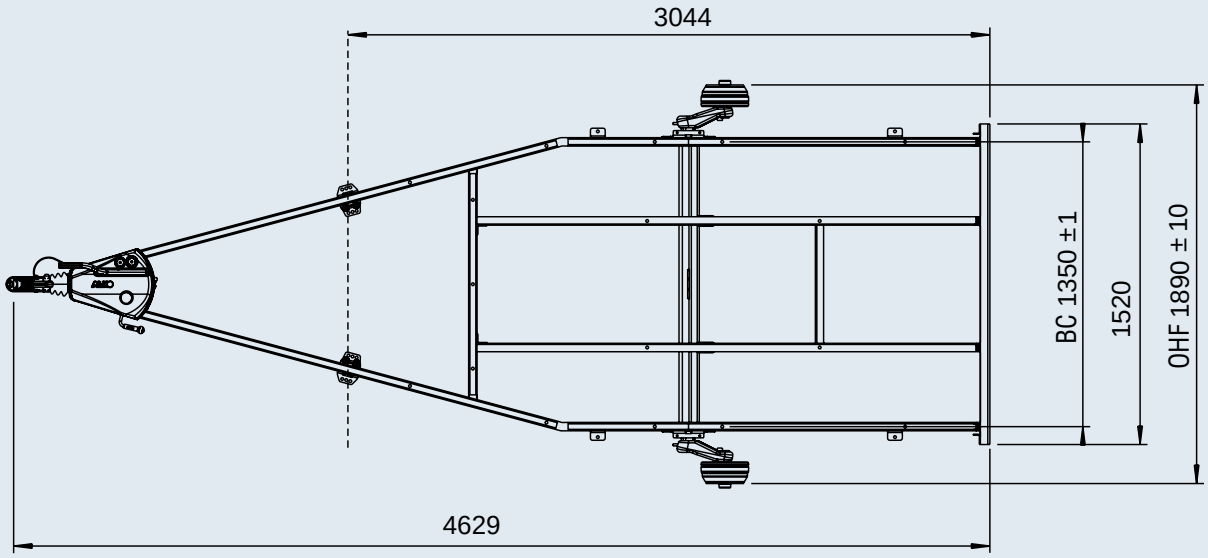

LOW-LOADER CHASSIS

SA 1,800 kg, with frame

Chassis for closed bodies, e.g. sales trailers	
Part no.	1 422 760
Gross weight	1,800 kg
	236 kg
	On request

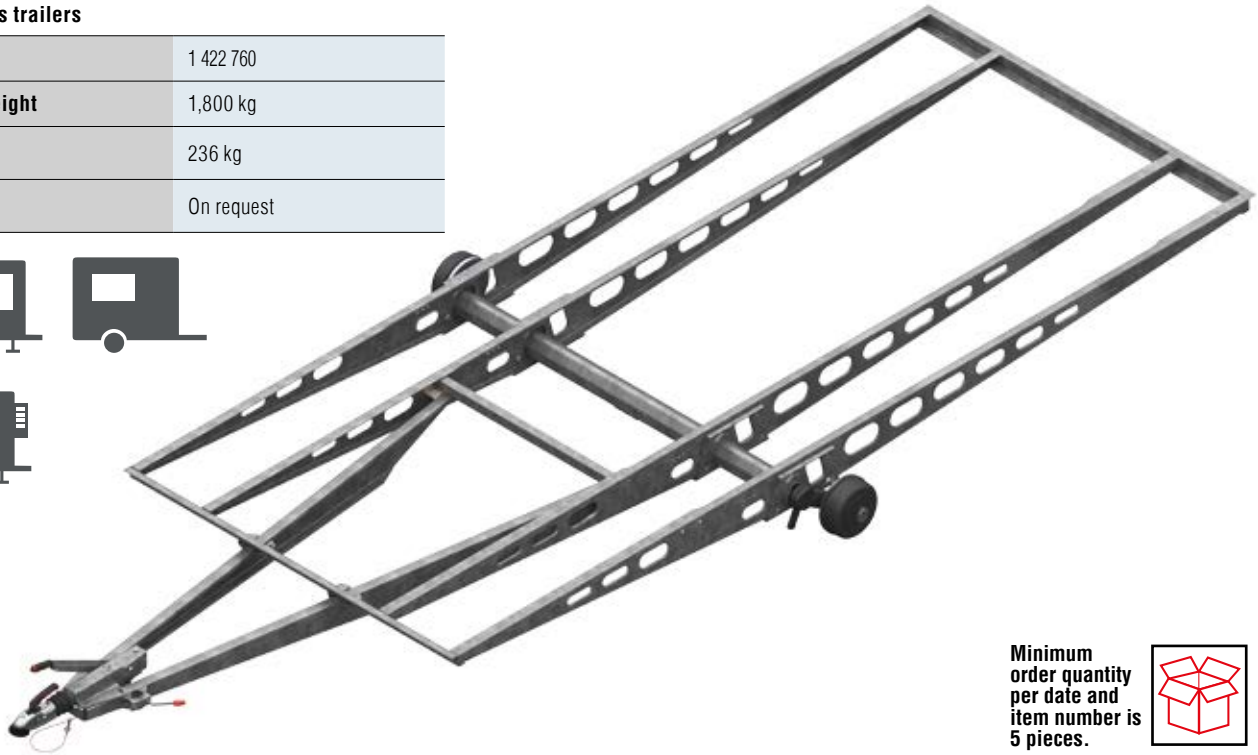

Minimum order quantity per date and item number is 5 pieces.

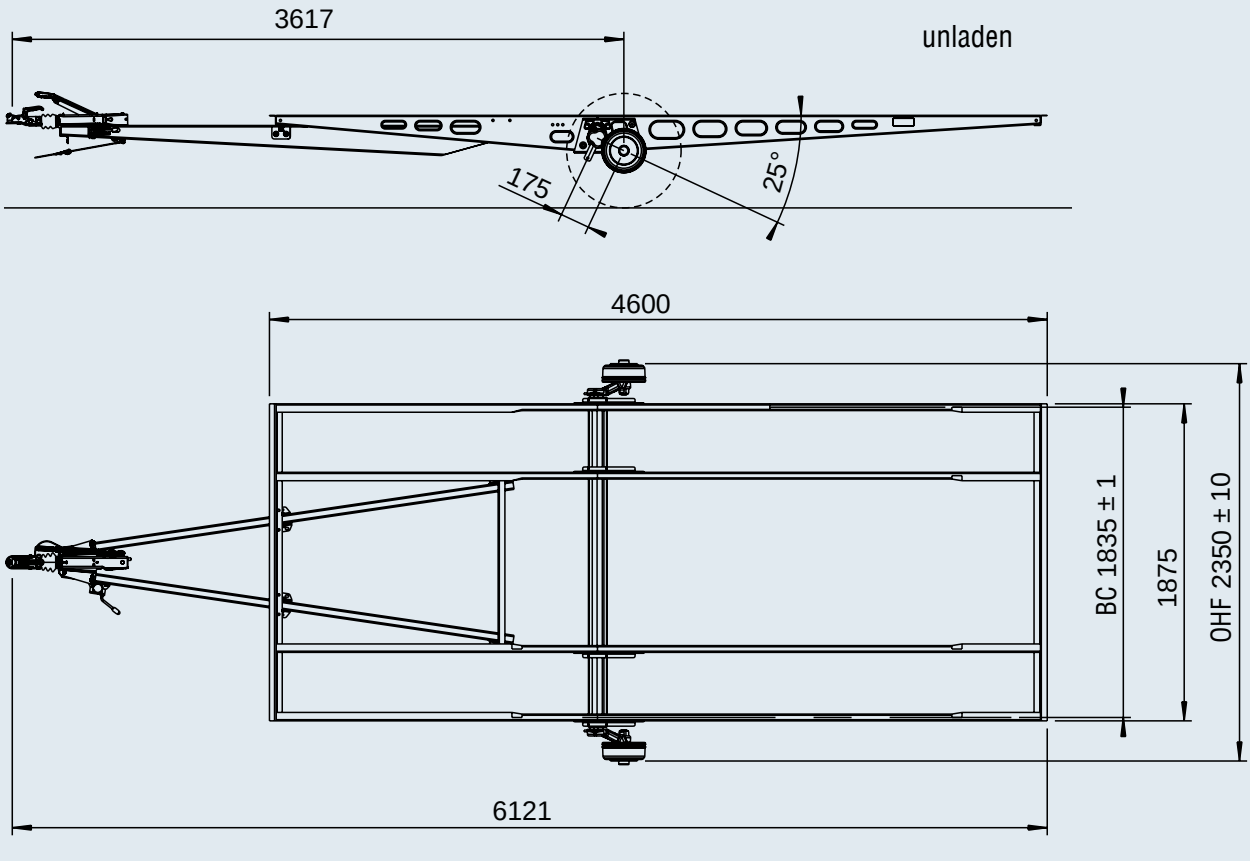

LOW-LOADER CHASSIS

TA 2,000 kg, with frame

Chassis for closed body types, e.g. sales trailers	
Part no.	1 422 130
Gross weight	2,000 kg
	330 kg
	On request

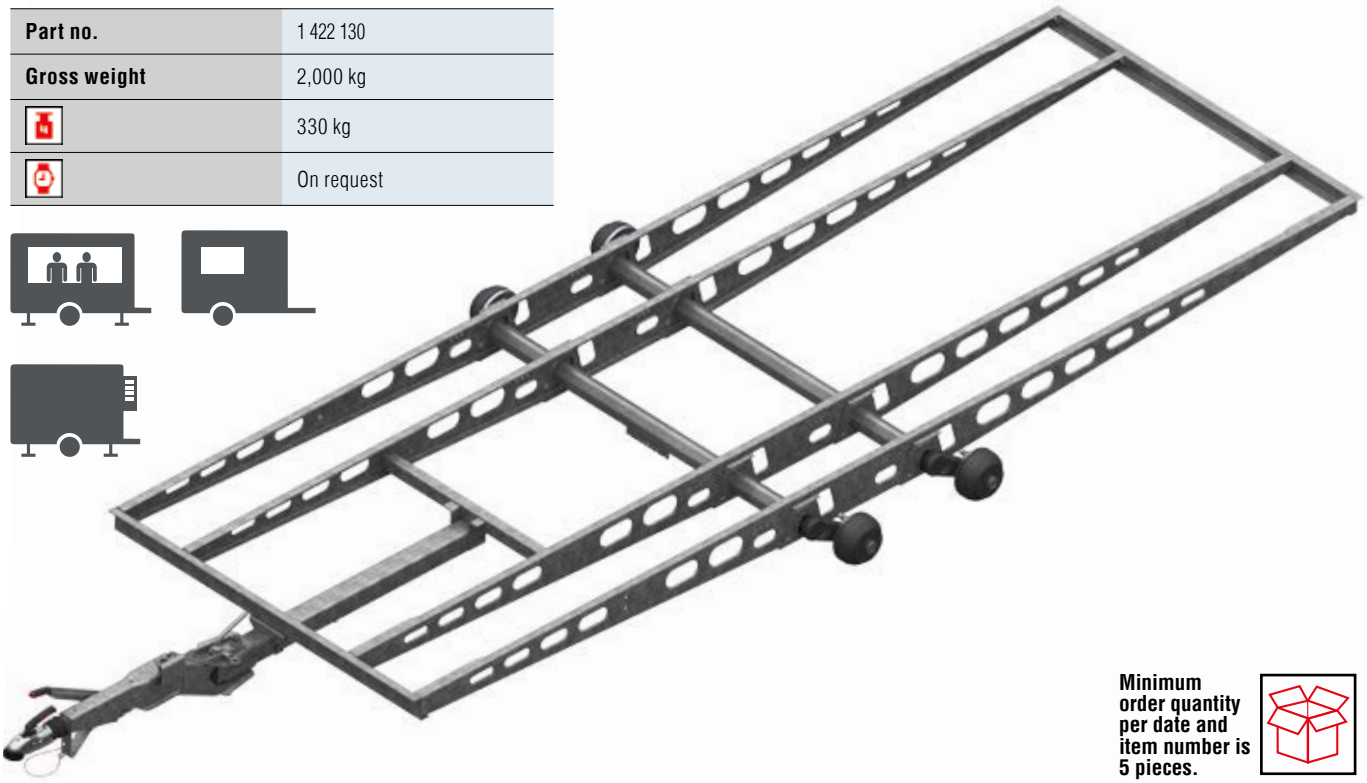

Minimum order quantity per date and item number is 5 pieces.

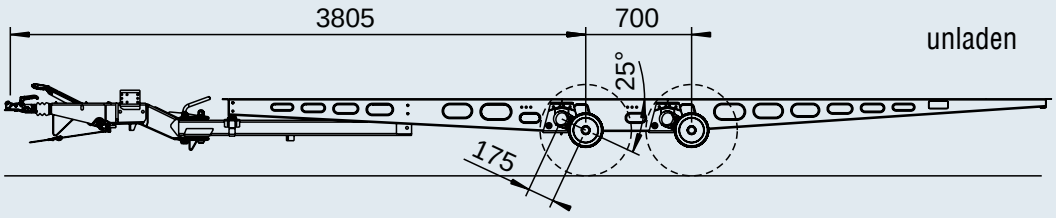

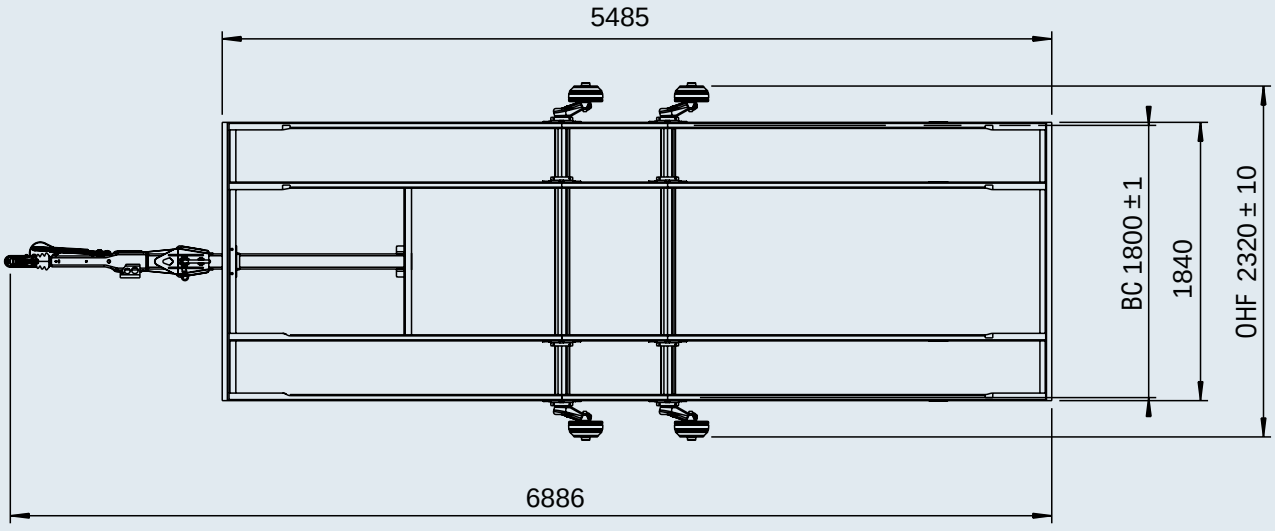

LOW-LOADER CHASSIS

TA 2,000 kg, without frame

Chassis for horse boxes	
Part no.	1 220 768
Gross weight	2,000 kg
	184 kg
	On request

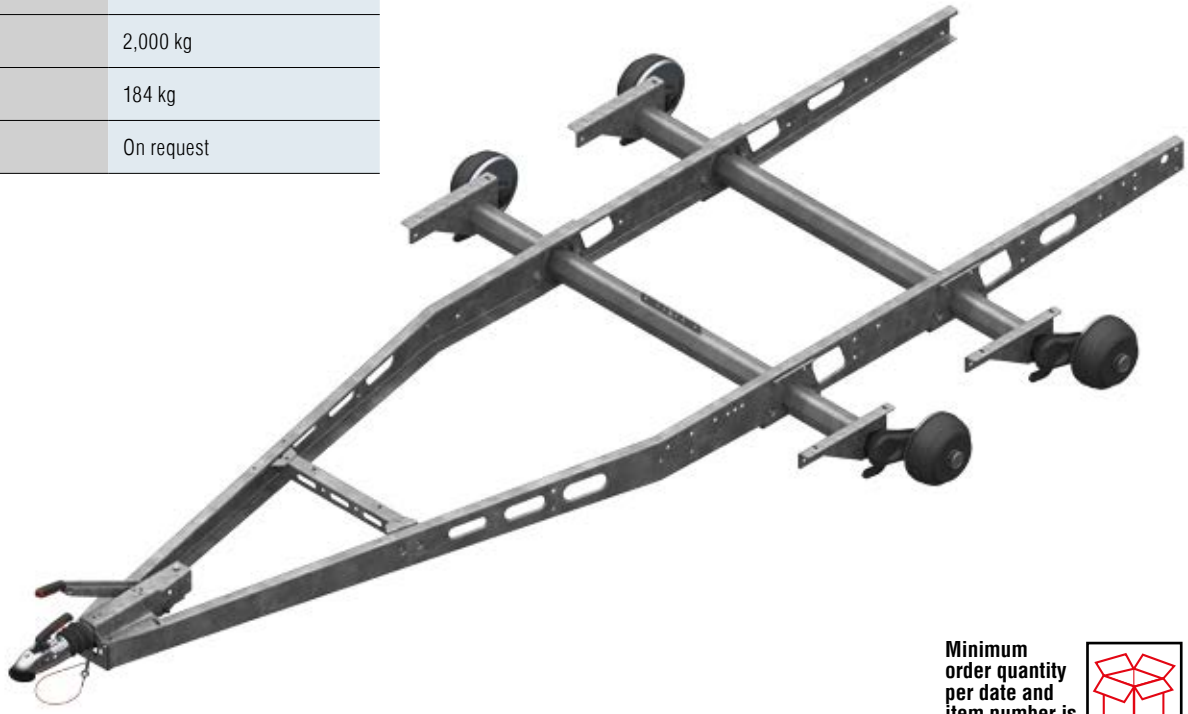

Minimum order quantity per date and item number is 5 pieces.

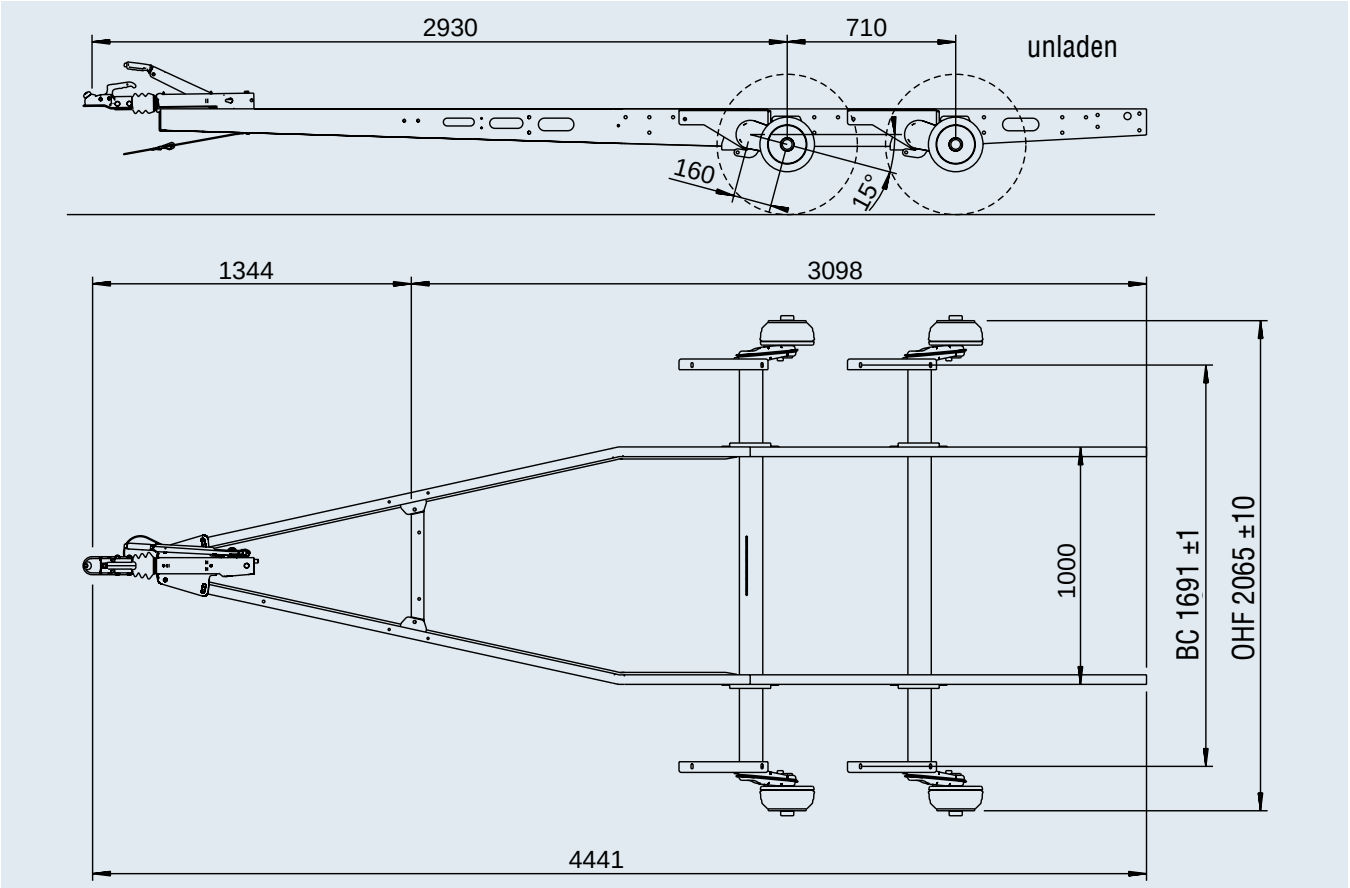

LOW-LOADER CHASSIS

TA 2,600 kg, with frame

Chassis for car transporters with straight rear

Part no.	Gross weight kg	Wheel brake	Wheel connection	Wheel bolts		
244 082	2,600 kg	2051	112 x 5	Ball M12 x 1.5	275	On request



Minimum order quantity per date and item number is 5 pieces.

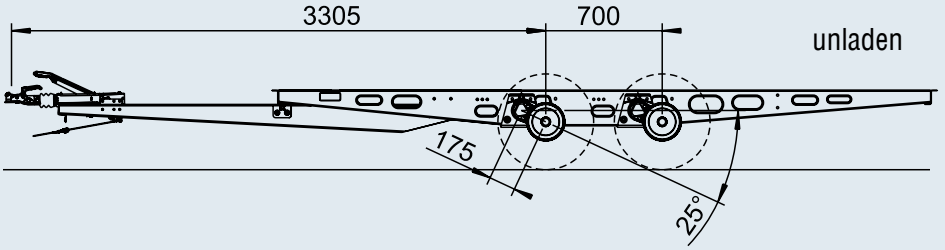

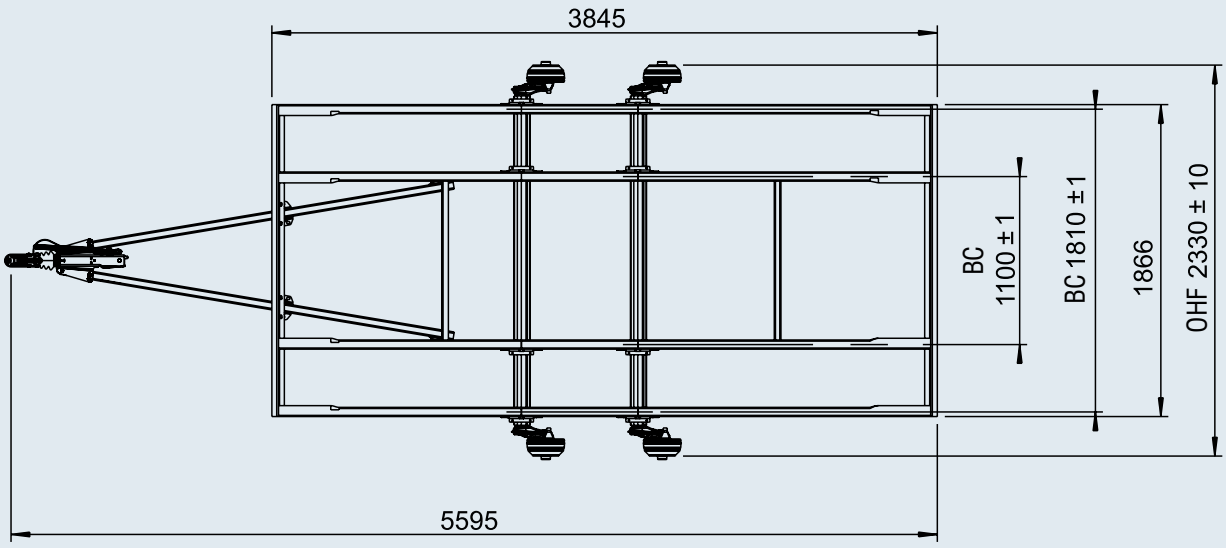

LOW-LOADER CHASSIS

TA 2,600 kg, with frame

Chassis for car transporters with sloping rear

Part no.	Gross weight kg	Wheel brake	Wheel connection	Wheel bolts		
244 081	2,600 kg	2051	112 x 5	Ball M12 x 1,5	275	On request



Minimum order quantity per date and item number is 5 pieces.

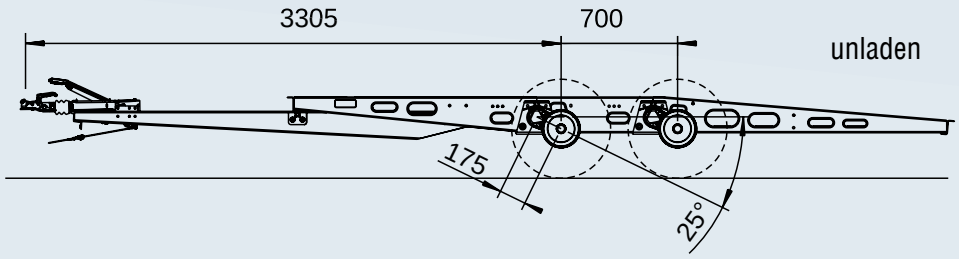

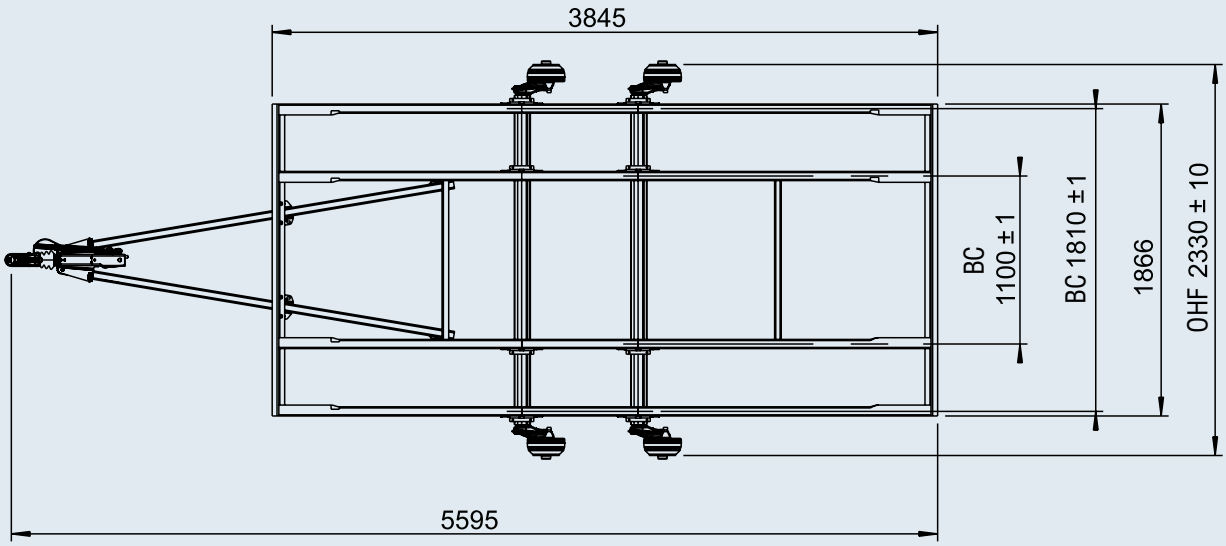

LOW-LOADER CHASSIS

TA 2,700 kg, with frame

Chassis for closed bodies, e.g. sales trailers	
Part no.	1 421 724
Gross weight	2,700 kg
	265 kg
	On request



Minimum order quantity per date and item number is 5 pieces.

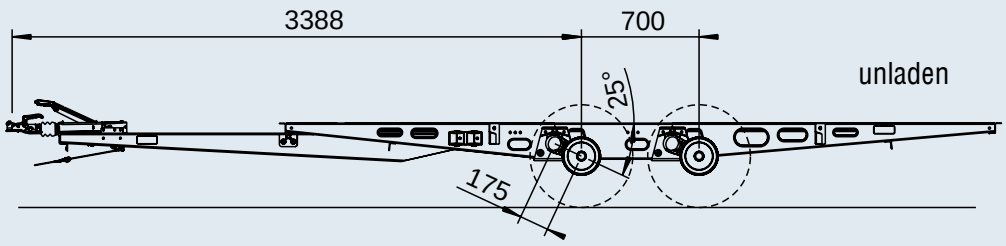

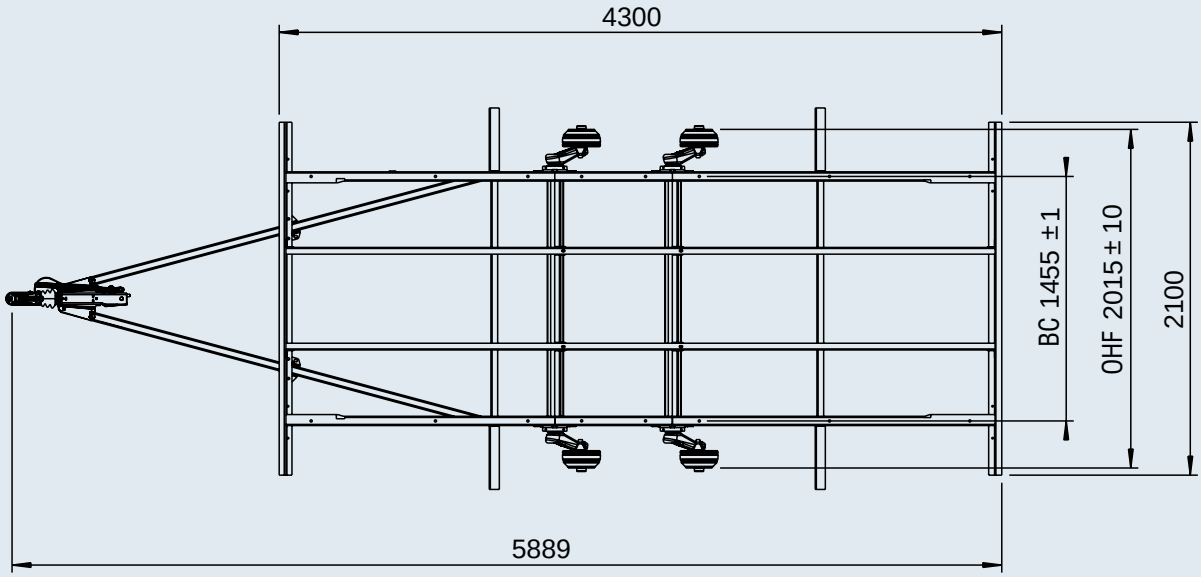

LOW-LOADER CHASSIS

TA 3,000 kg, with frame

Chassis for closed bodies, e.g. sales trailers	
Part no.	1 423 954
Gross weight	3,000 kg
	277 kg
	On request



Minimum order quantity per date and item number is 5 pieces.

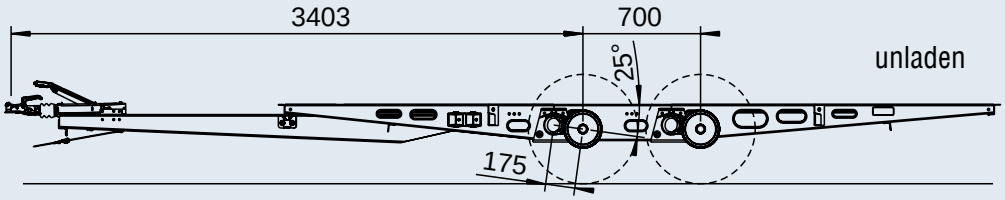

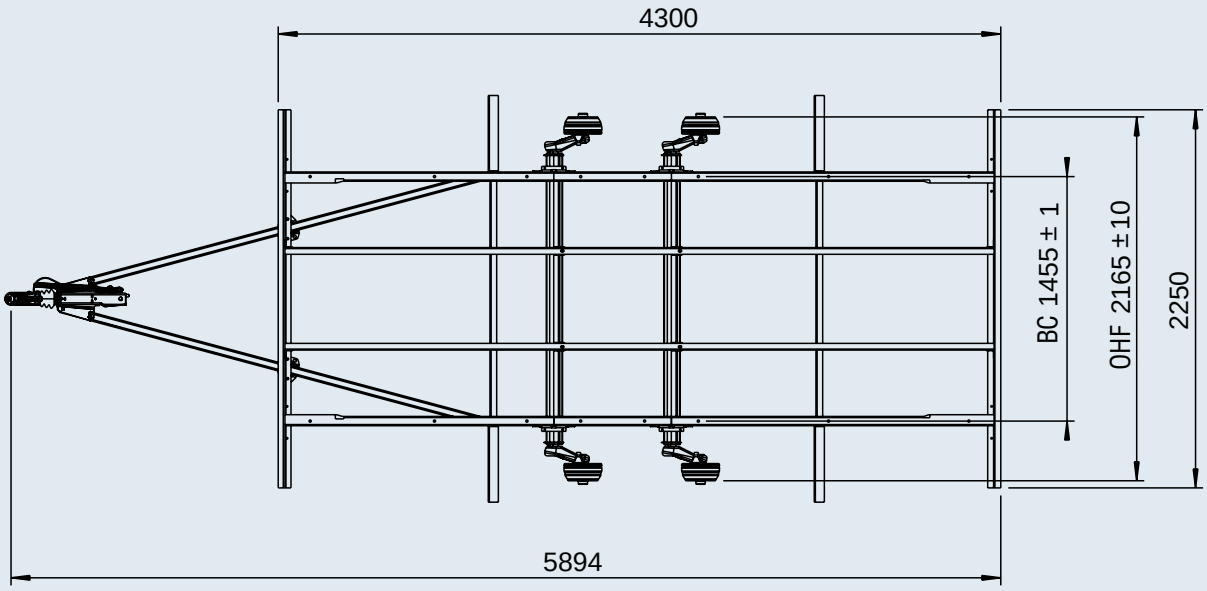

LOW-LOADER CHASSIS

TA 3,500 kg, with frame

Chassis for closed bodies, e.g. sales trailers	
Part no.	1 423 918
Gross weight	3,500 kg
	388 kg
	On request

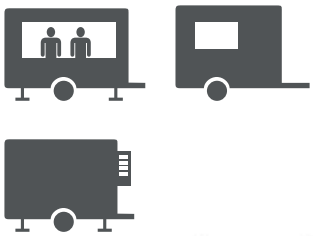

Minimum order quantity per date and item number is 5 pieces.

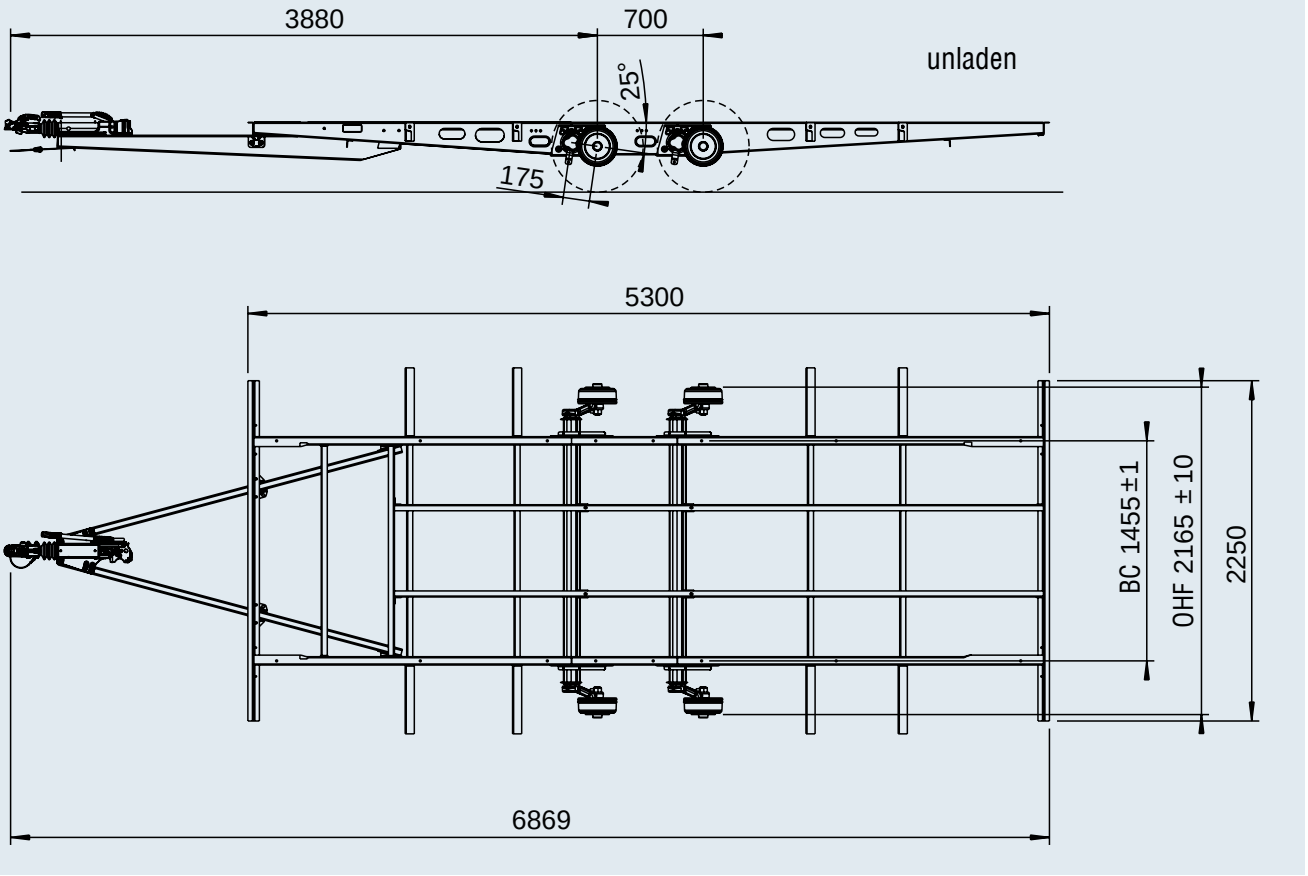

HIGH-LOADER CHASSIS

SA 1,300 kg, with frame

Chassis for transport trailer

Part no.	1 227 571
Gross weight	1,300 kg
	255 kg
	On request

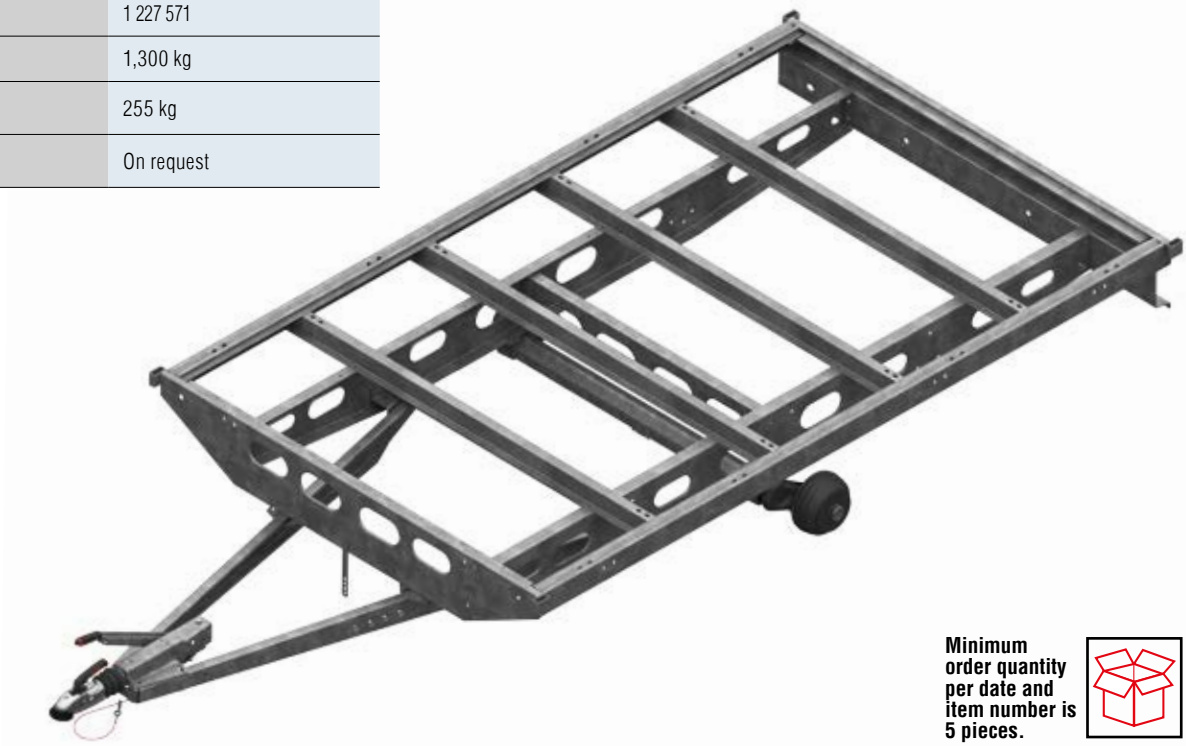

Minimum order quantity per date and item number is 5 pieces.

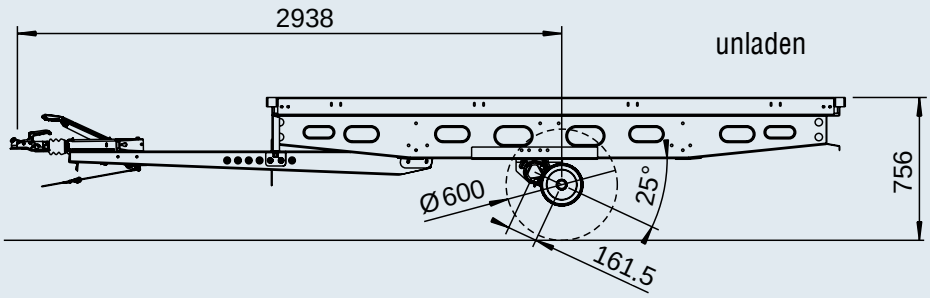

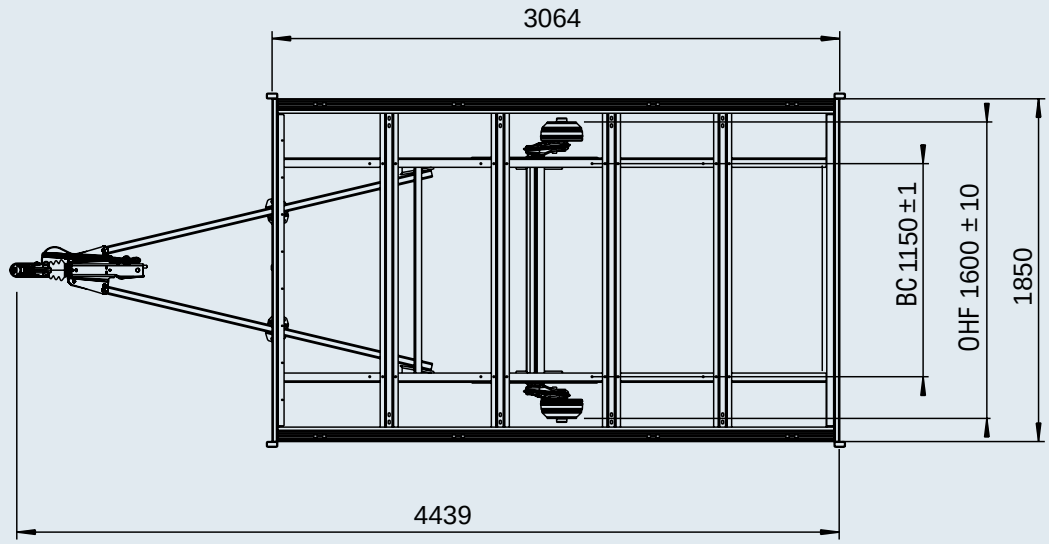

HIGH-LOADER CHASSIS

SA 1,500 kg, with frame

Chassis for transport trailer

Part no.	1 227 392
Gross weight	1,500 kg
	311 kg
	On request

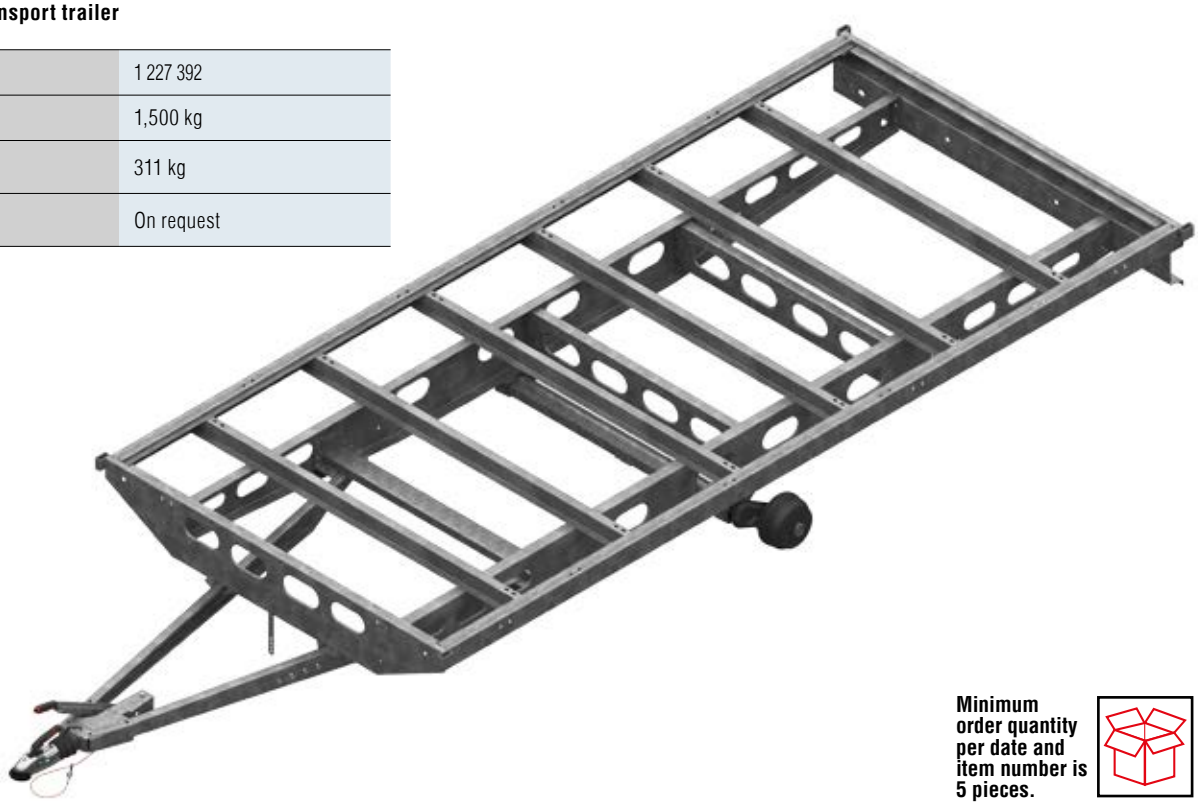

Minimum order quantity per date and item number is 5 pieces.

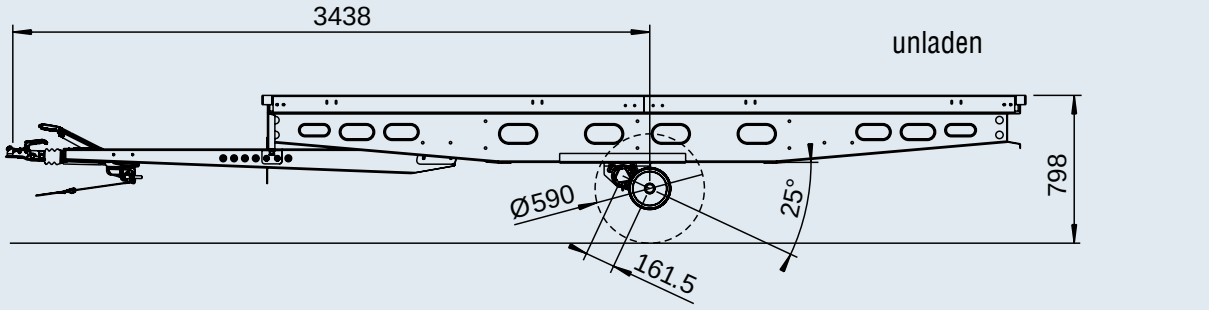

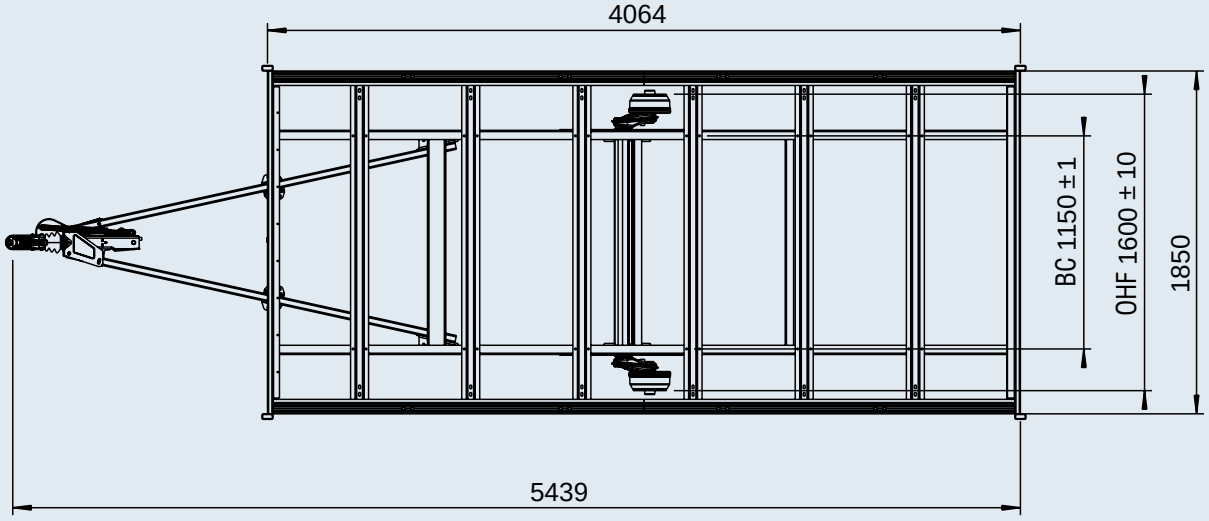

HIGH-LOADER CHASSIS

TA 2,000 kg / 2,600 kg, with frame

Chassis for transport trailer

Part no.	1 227 570	1 227 133
Gross weight	2,000 kg	2,600 kg
	296 kg	296 kg
	On request	

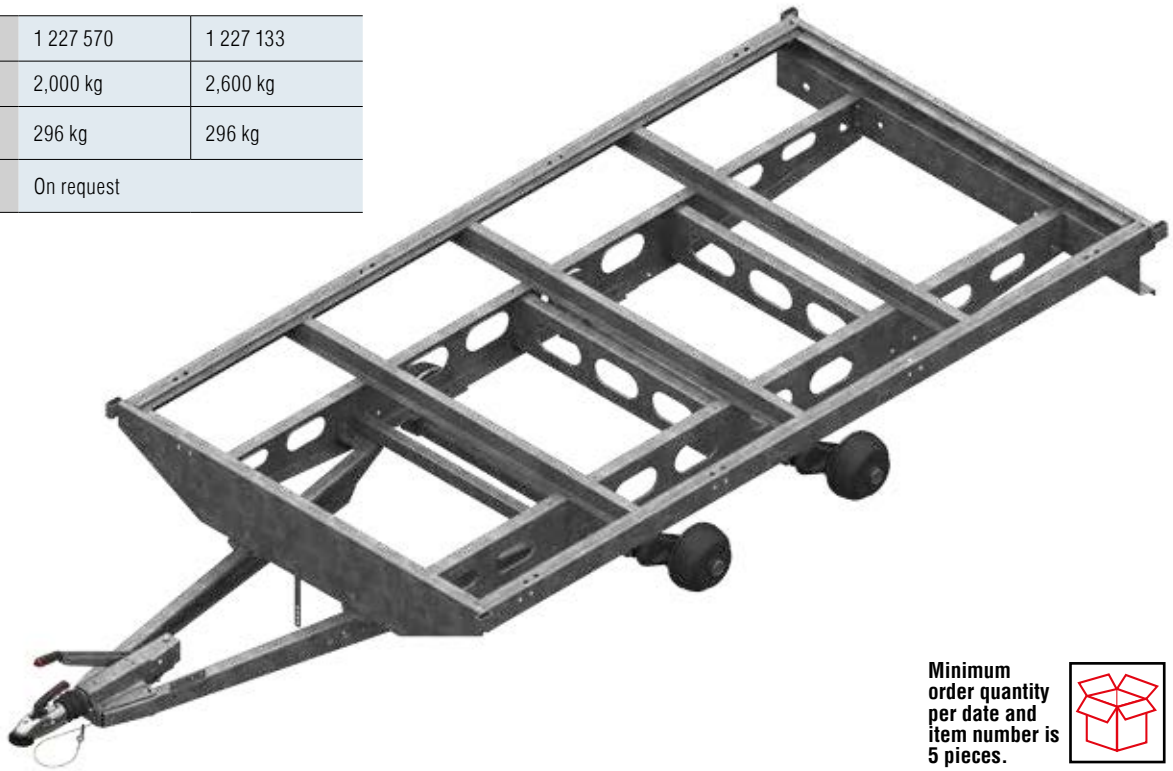

Minimum order quantity per date and item number is 5 pieces.

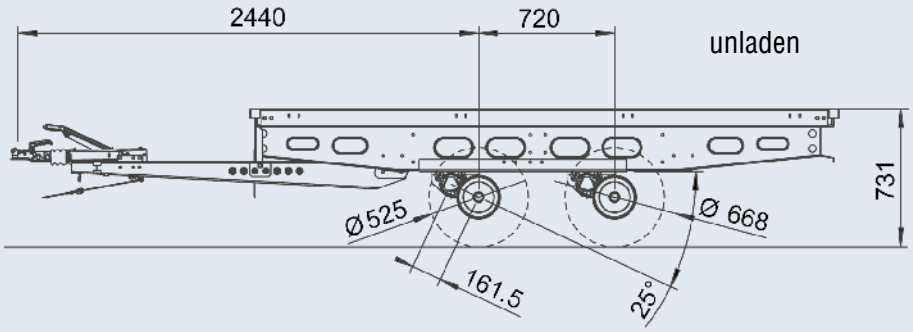

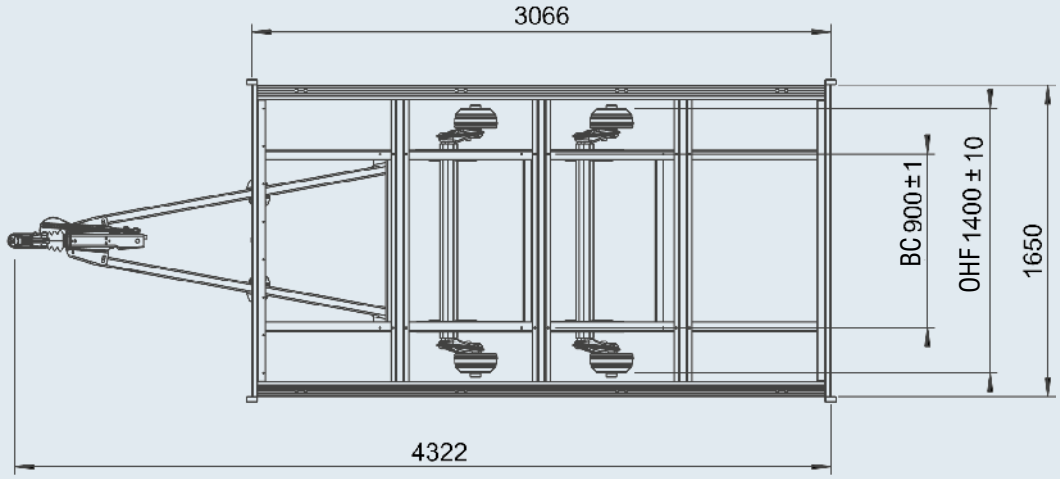

HIGH-LOADER CHASSIS

TA 3,500 kg, with frame

Chassis for transport trailer

Part no.	1 227 717
Gross weight	3,500 kg
	506 kg
	On request

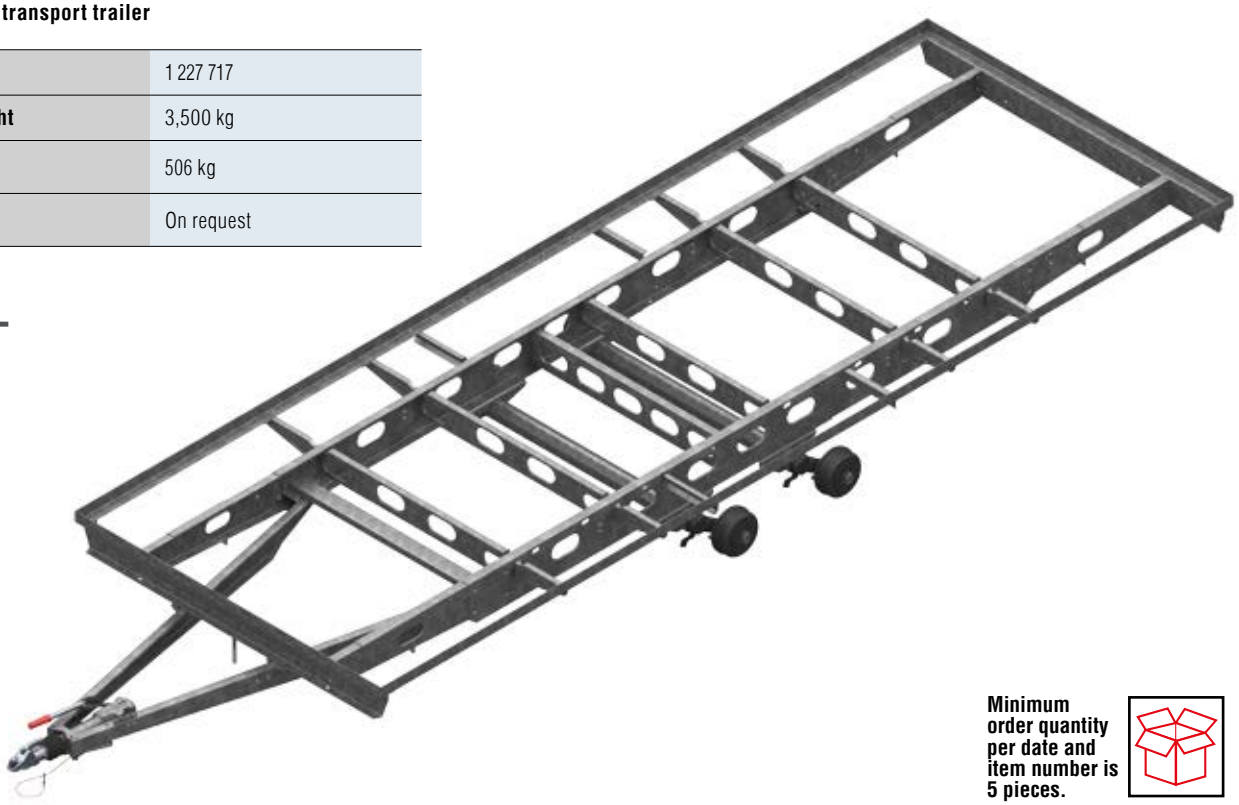

Minimum order quantity per date and item number is 5 pieces.

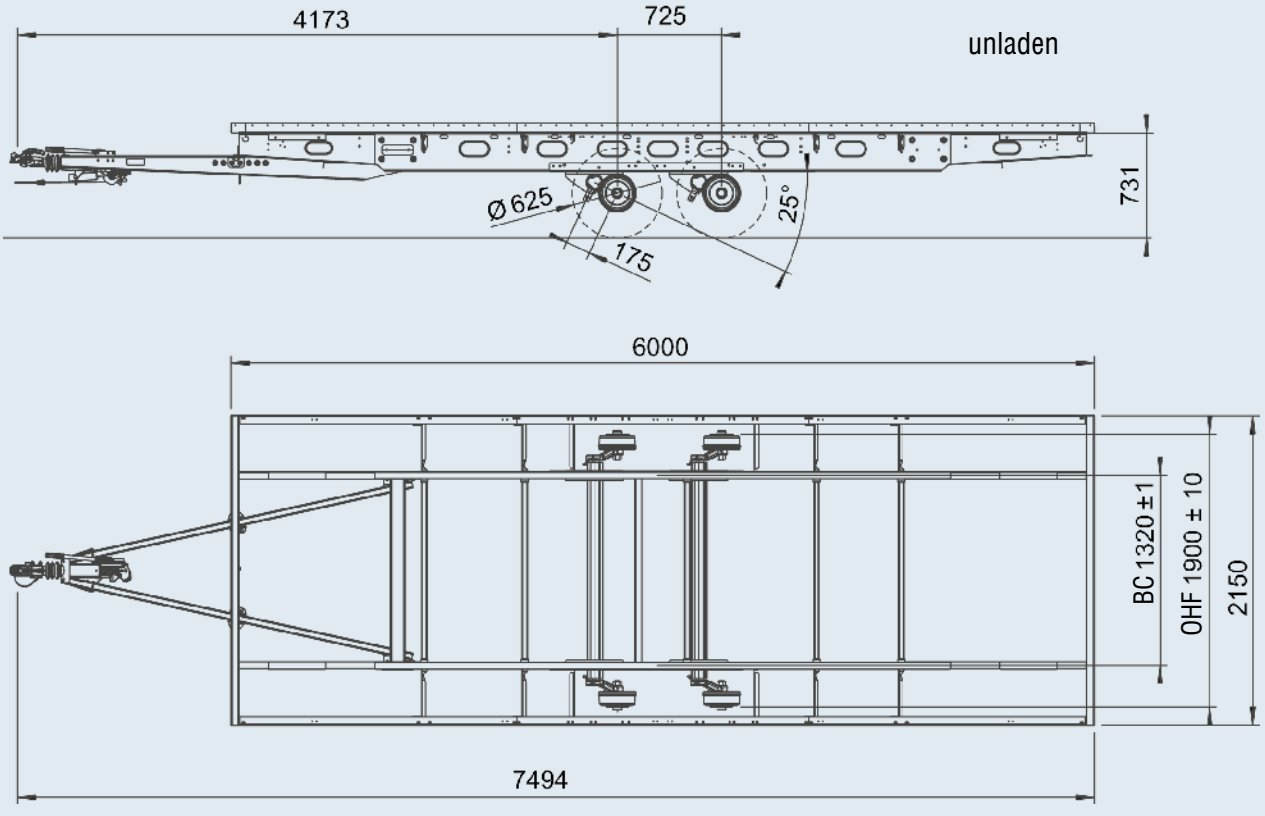

CHASSIS WITH STEERING FRAME

Up to 7,200 kg for transporting people

YOUR ADVANTAGE
The trailer runs in almost perfect directional stability behind the towing vehicle.

SAMPLE APPLICATIONS
Funfairs

SCOPE OF SUPPLY
Complete axles with frame without tyres and rims.



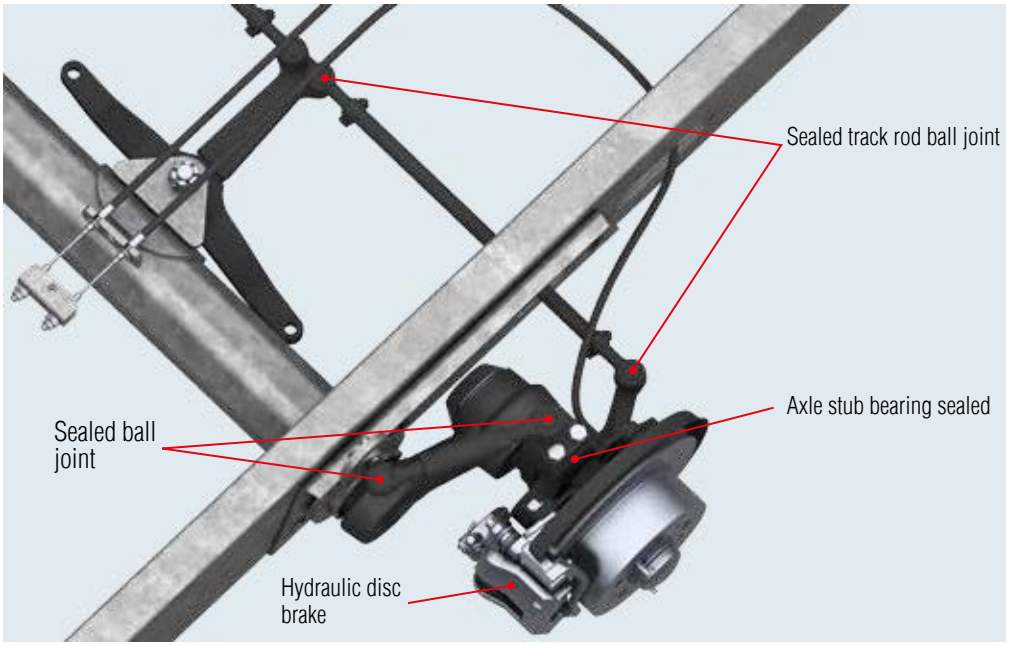

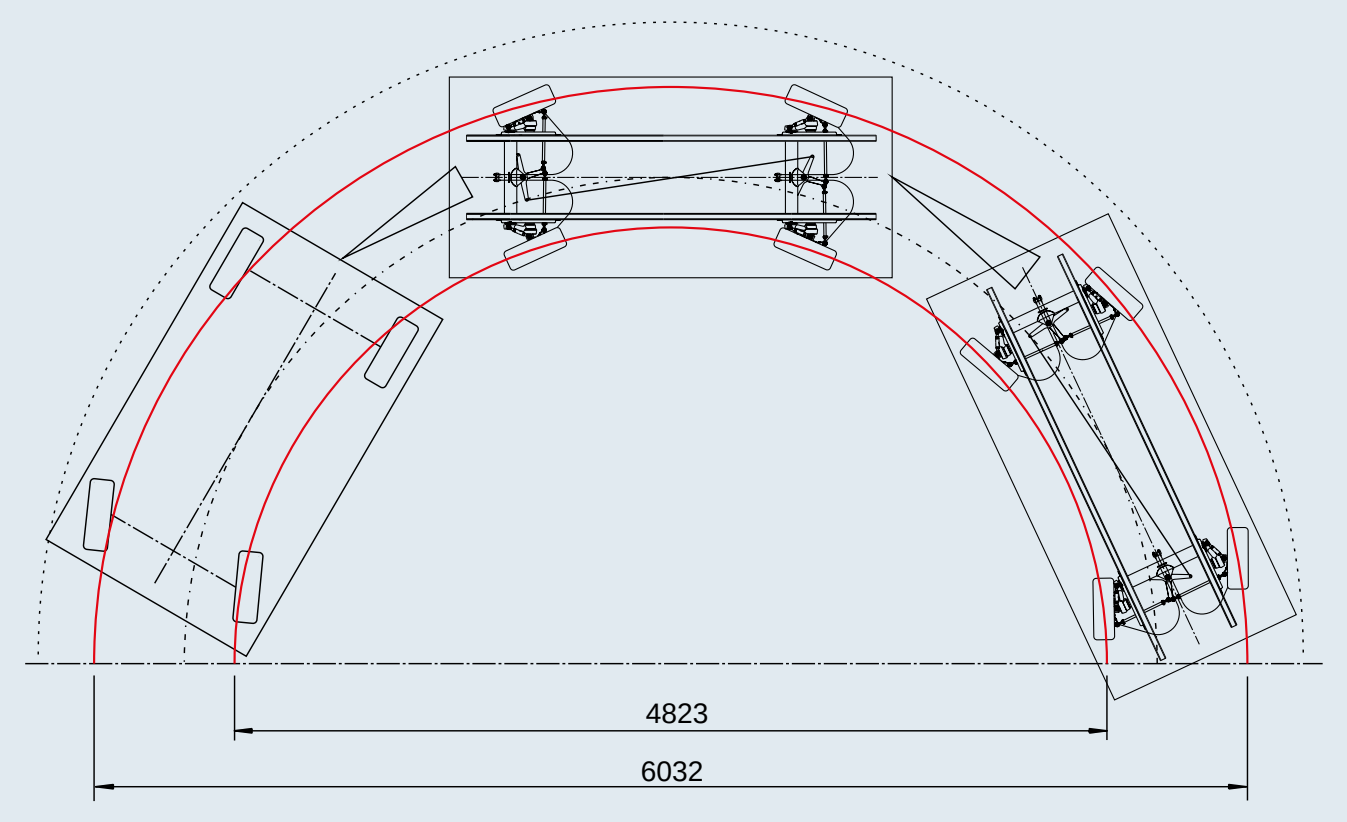

Illustration with 2 axles

TECHNOLOGY

- **Service brake:**
  Hydraulic actuation of the wheel brake cylinders

- **Parking brake:**
  Mechanical actuation via Bowden cables

- For building these special trailers, refer to our body instructions no. 1 312 133 as a guide.

- The trailer must be serviced regularly (see operating instructions no. 1 311 308).

Wheelbase and frame length are variable.
The installation guidelines must be complied with however!

Number of trailers	A maximum of 4 trailers are possible	
Wheels / tyres	Wheel connection	Ø 118x5
	Tyres	185/45 R15
	Rims	6J x 15
	Taper-head wheel bolts	M14x1.5 x 43 SW 17
	Offset	68
Permitted maximum speed 	**Number of trailers:**	
	2 trailers	
	3 trailers	
	4 trailers	
	2 trailers	

CHASSIS WITH STEERING FRAME

Up to 3,500 kg for transporting people

SCOPE OF SUPPLY
Complete axles with frame
without tyres and rims.



Minimum order quantity per date and item number is 5 pieces.

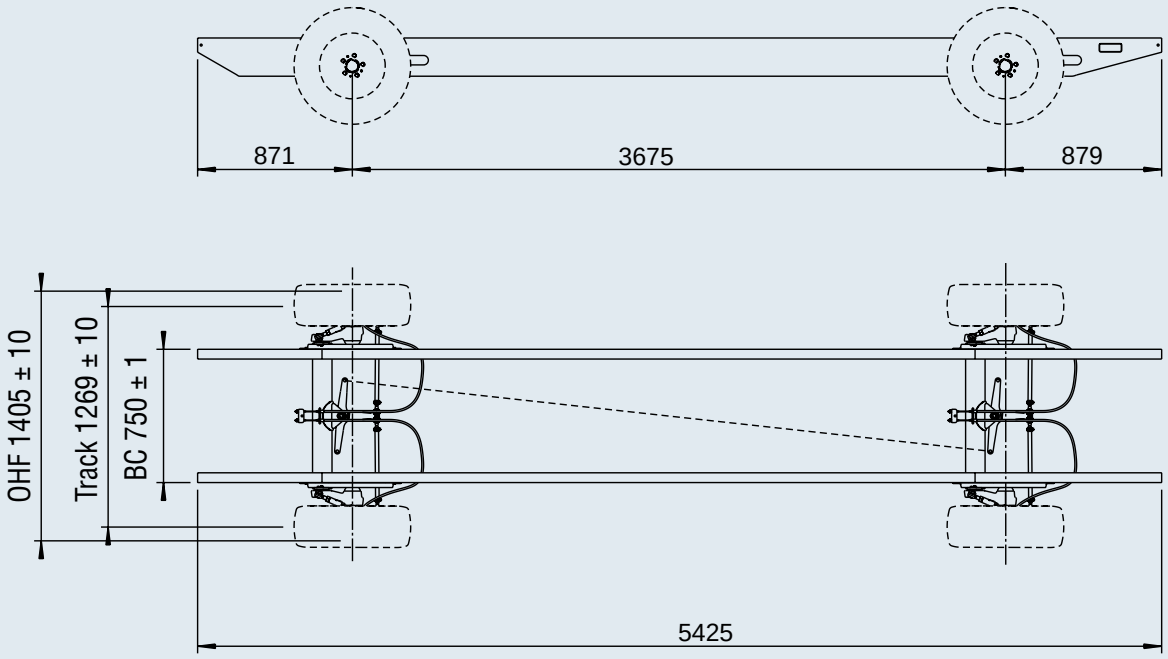

Part no.	Type	Gross weight kg				
1 730 195	2 axles	3,500 kg	300	–	–	On request

CHASSIS WITH STEERING FRAME

Up to 5,400 kg for transporting people

SCOPE OF SUPPLY

Complete axles with frame
without tyres and rims.

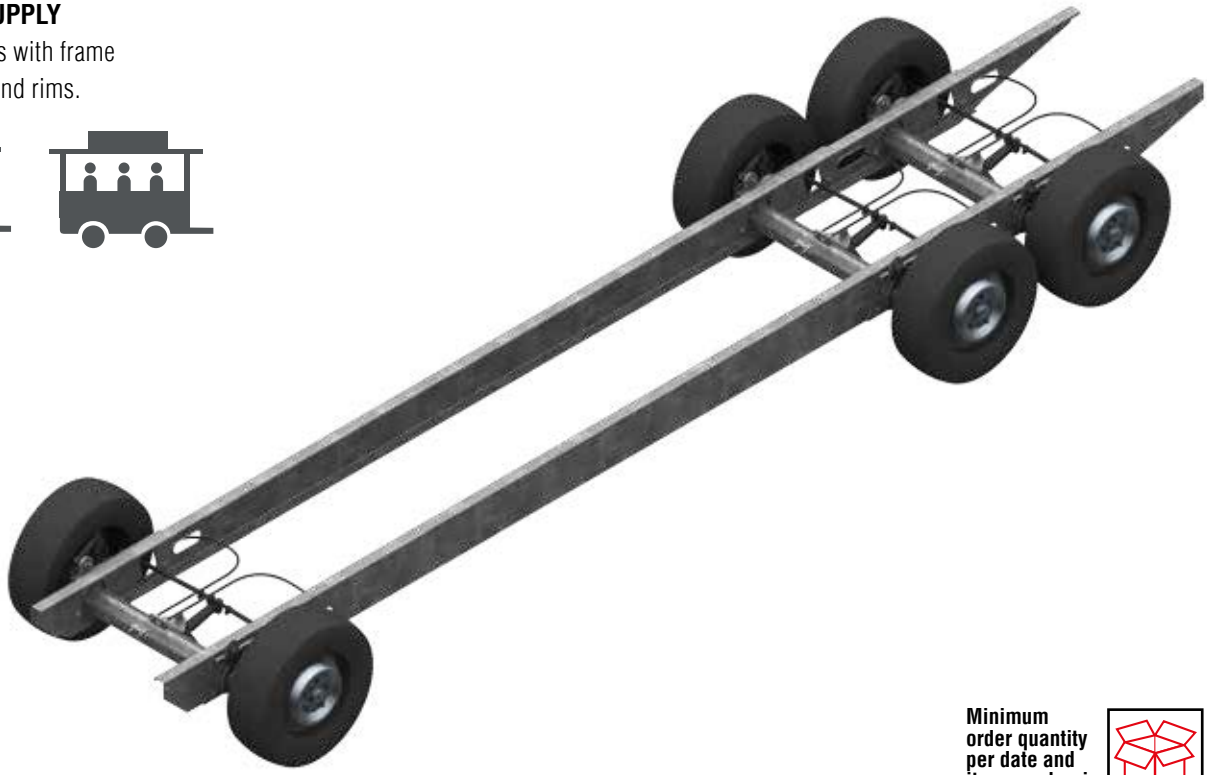

Minimum order quantity per date and item number is 5 pieces.

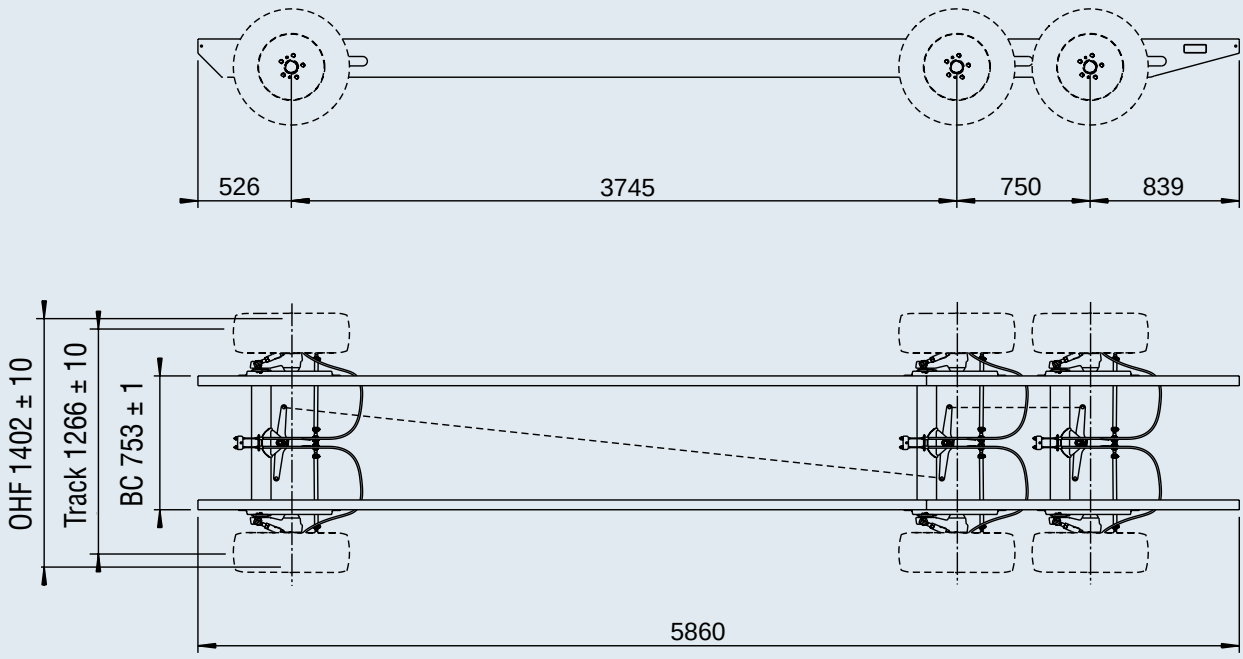

Part no.	Type	Gross weight kg				
1 730 730	3 axles	5,400 kg	400	–	–	On request

CHASSIS WITH STEERING FRAME

Up to 7,200 kg for transporting people

SCOPE OF SUPPLY

Complete axles with frame
without tyres and rims.



Minimum order quantity per date and item number is 5 pieces.

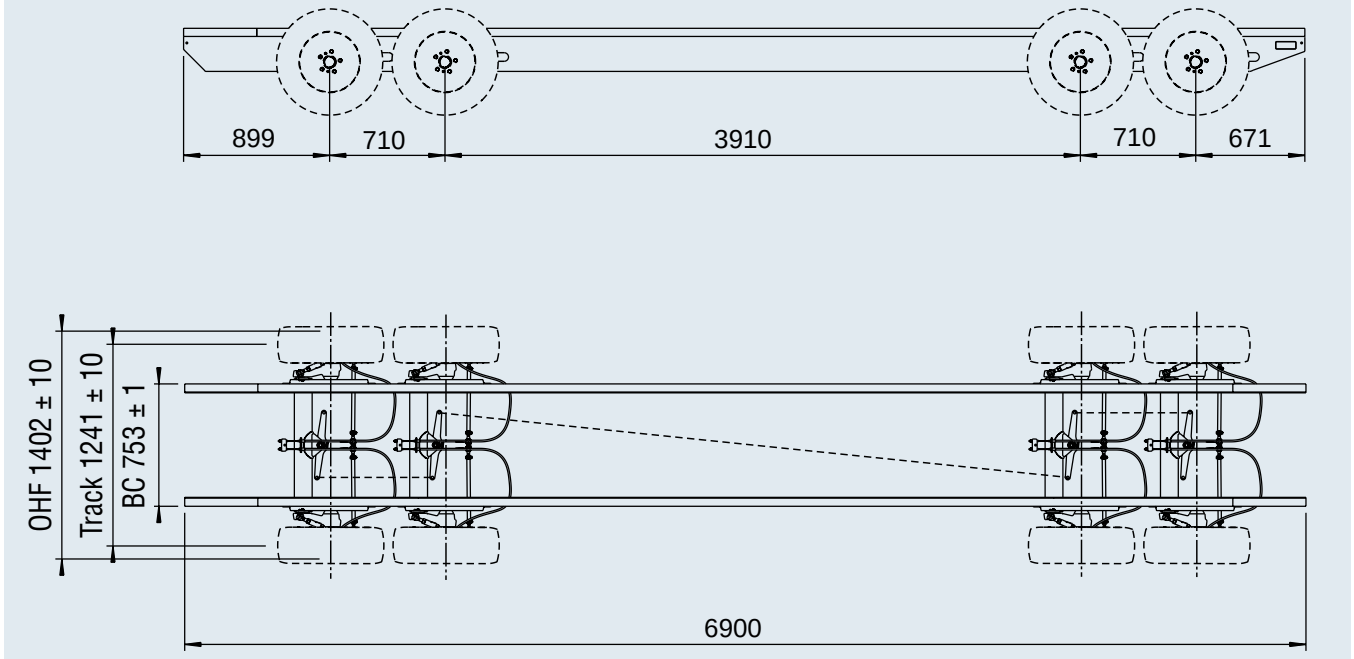

Part no.	Type	Gross weight kg				
1 730 731	4 axles	7,200 kg	500	–	–	On request

CHASSIS WITHOUT STEERING FRAME

up to 6,000 kg for transporting goods

APPLICATION EXAMPLES
In-plant transportation



SCOPE OF SUPPLY
Complete axles
without tyres and rims.

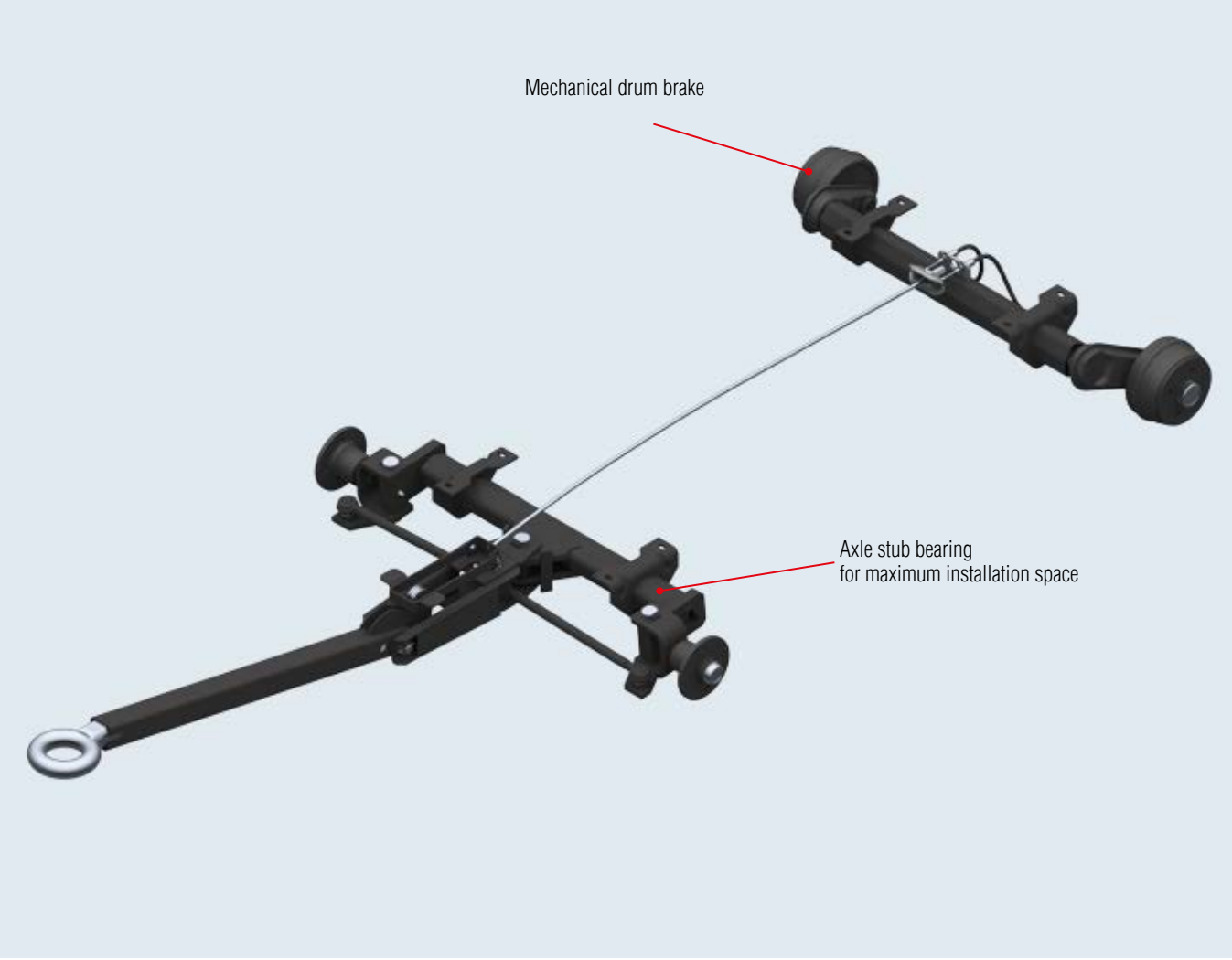

Permitted maximum speed

max. 25 km/h

CHASSIS WITHOUT STEERING FRAME

with automatic parking brake 1,200 kg with rubber suspension

APPLICATION EXAMPLES

In-plant transportation



YOUR ADVANTAGE

- Low body (D)
- Variable configuration (A / C)
- Variable axle centre distance (X)
- Automatic brake activation (B)
- Rubber suspension

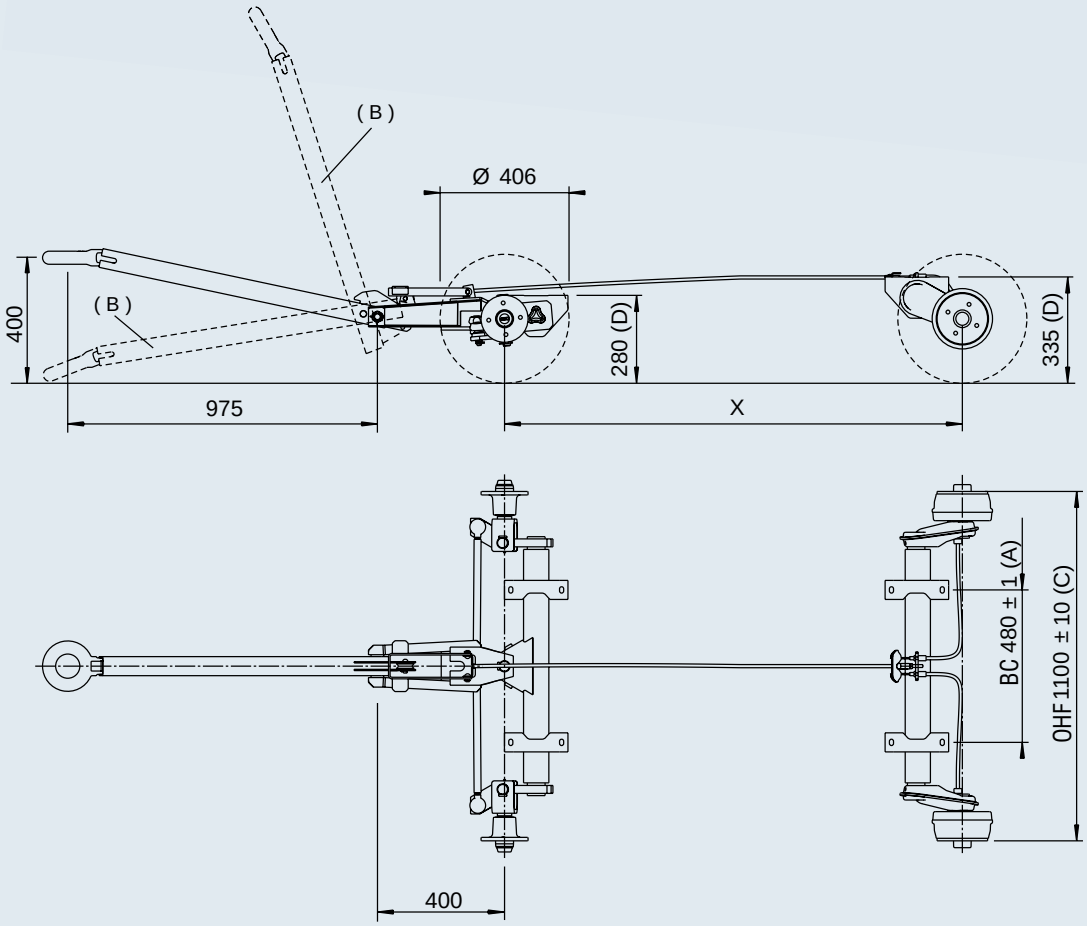

Part no.	Gross weight kg				
1 226 367	1,200 kg	82	–	–	On request

CHASSIS WITHOUT STEERING FRAME

with automatic parking brake 6,000 kg with rubber suspension

APPLICATION EXAMPLES

In-plant transportation



YOUR ADVANTAGE

- Low body (D)
- Variable configuration (A/C)
- Variable axle centre distance (X)
- Without automatic brake
- Rubber suspension
- Suitable for construction sites (e.g. open-cast mines)

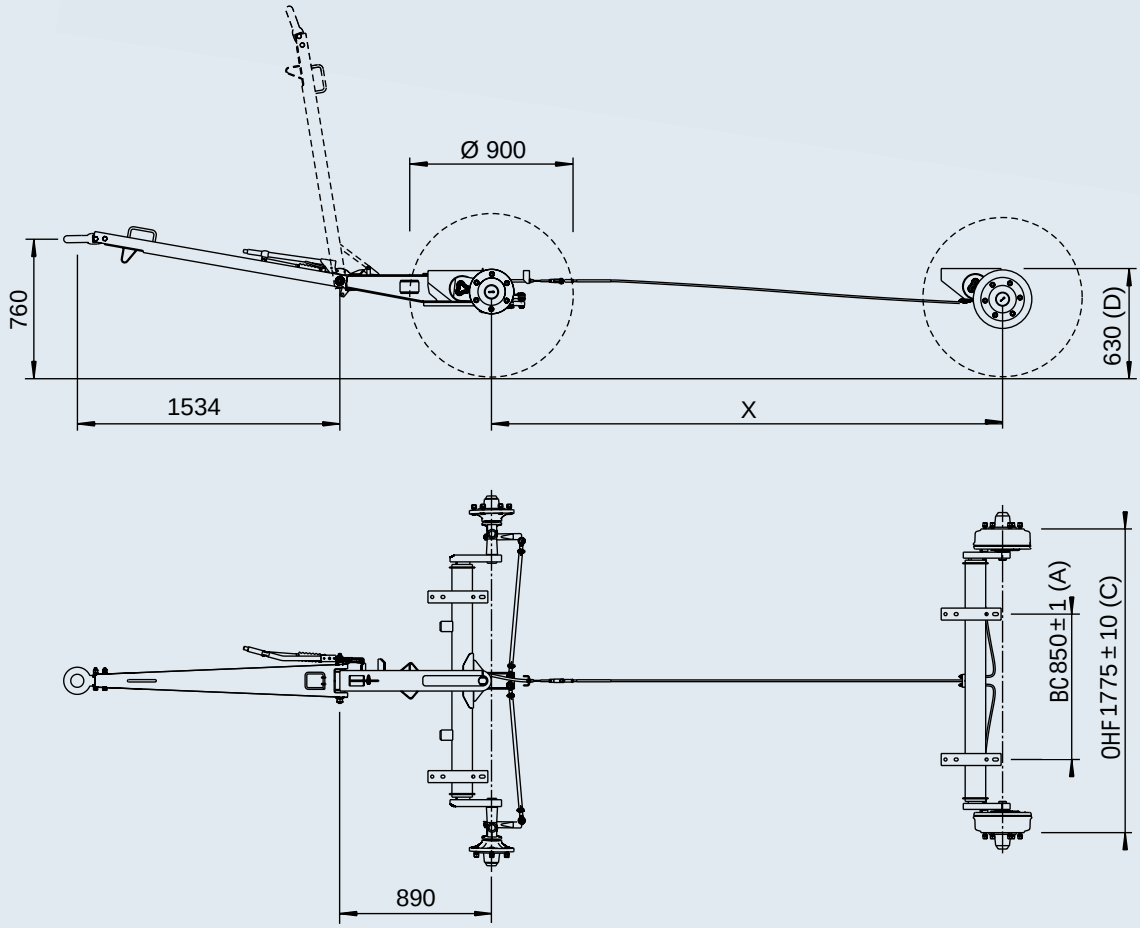

Part no.	Gross weight kg				
1 208 420 (steered front axle with drawbar)	3,000 kg	270	–	–	On request
1 424 164 (rear axle)	3,000 kg	125	–	–	On request

6. COUPLING HEADS AND DRAWBAR EYES



COUPLING HEADS AND DRAWBAR EYES

Product differentiation 344

Coupling heads for unbraked trailers

AL-KO 345 – 351

Winterhoff 352 – 361

Coupling heads for braked trailers

AL-KO 362 – 367

Winterhoff 368 – 375

Coupling heads for braked trailers with anti-sway damping

AL-KO 376 – 378

Winterhoff 379 – 380

AL-KO / Winterhoff accessories 381 – 382

Drawbar eyes 383 – 385

COUPLING HEADS

Product differentiation

Hitches are used in diverse areas

You're spoiled for choice with our extensive range of products and features. To make the choice easier, the following symbols specify product group, additional uses and product characteristics.



Galvanised
Standard corrosion protection



No unsuccessful locking
Protects against unsuccessful locking



Maximum speed
Higher theoretical maximum speed



Soft touch grip
Prevents hands from slipping



Anti-swinging
Cushions swinging movements



Soft dock option
Protects the shin and rear of the vehicle



Coupling indicator
Indicator for correct coupling



Anti-pitching
Cushions pitching movements



Lock option
Anti-theft device to prevent rapid access



Wear indicator
Wear indicator for the coupling head



Wear indicator
Wear indicator for the friction linings

BASIC PRODUCT LINE

The **BASIC** products are entirely solid and robust.
They are characterised by very good processing properties for the respective area of application and are essential in day-to-day trailer use, as they fulfil the basic needs of the trailer users.

We ensure that these Basic variants also meet our high quality standards and exceed the legal minimum requirements.

PLUS PRODUCT LINE

The products from the **PLUS** category boast high quality of finishing, reliability, high-quality materials and longevity. Their high level of stability and smart technical details fulfil the high requirements in the day-to-day use of trailers.

All products have extended functions and are nevertheless user-friendly and have an attractive design.

PREMIUM PROFI PRODUCT LINE

PREMIUM PROFI products are characterised by trail-blazing design, sophisticated functions and top quality. They are innovative and traditional products for the highest demands and challenging areas of application. They are the gold standard in terms of processing, material and design. Their longevity ensures that you will have many years of joy with these products.

COUPLING HEAD AL-KO AK 7 PLUS

for unbraked trailers up to 750 kg



Powerful connection

Your safety is important to us, which is why the AK 7 PLUS complies with all quality requirements that a coupling head for unbraked trailers up to 750 kg might be expected to meet, whether they have a round or square-profile drawbar. Place your trust in the unique quality of AL-KO products engineered in Germany!

Safe and simple – operation of the AK 7 PLUS



Opened hitch

The hand grip of the coupling head of your trailer points upwards at an angle, showing the user a luminous red mark: I'm not yet locked!



Closed hitch

The towing hitch of the towing vehicle is completely enclosed by the ball socket of the AK 7 PLUS. The hand grip visibly and audibly engages in the horizontal position, and indicates to the user: the trailer is securely connected to the towing vehicle!

Foolproof maintenance



Wear limit not reached

If the red indicator on the bottom part of the hitch handle is visible when the hitch is fastened (ready for towing), the wear limit of the towbar in combination with the ball has not yet been reached. You do not need to take any action.

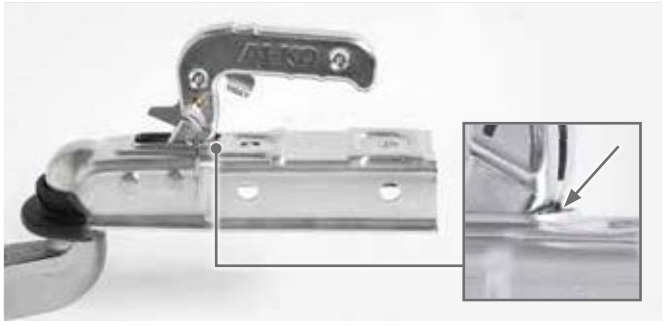

Wear limit reached

The red indicator on the hitch handle is no longer visible when the trailer is hitched up (condition suitable for towing). This indicates wear and means that immediate maintenance of the hitch at an AL-KO partner is required to continue towing safely.

COUPLING HEAD AK 7 PLUS

for unbraked trailers up to 750 kg



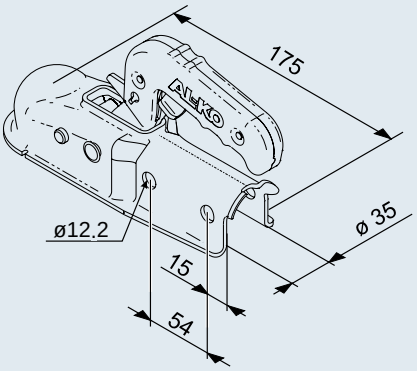

Coupling head AK 7 PLUS – 35 round version A	
SAP: KUPLNG KUGL AK7/A RD 35 PLUS	
Part no.	1 367 022
Perm. gross weight	750 kg
Nose load	75 kg
D / Dc value	7.19 kN
Material	steel
Tightening torque	75 Nm
ECE type approval no.	E1 55R-01 0164
	1.3 kg
	– 400 units



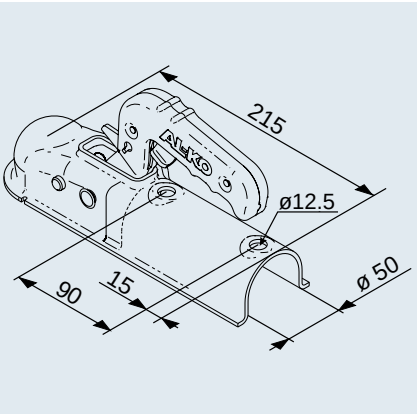

Coupling head AK 7 PLUS – 50 round version F	
SAP: KUPLNG KUGL AK7/F RD 50 PLUS	
Part no.	1 367 023
Perm. gross weight	750 kg
Nose load	75 kg
D / Dc value	7.19 kN
Material	steel
Tightening torque	75 Nm
ECE type approval no.	E1 55R-01 0164
	1.3 kg
	– 400 units



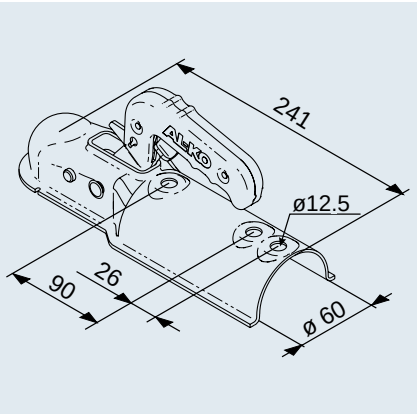

Coupling head AK 7 PLUS – 60 round version B	
SAP: KUPLNG KUGL AK7/B RD 60 PLUS	
Part no.	1 367 024
Perm. gross weight	750 kg
Nose load	75 kg
D / Dc value	7.19 kN
Material	steel
Tightening torque	75 Nm
ECE type approval no.	E1 55R-01 0164
	1.3 kg
	– 400 units



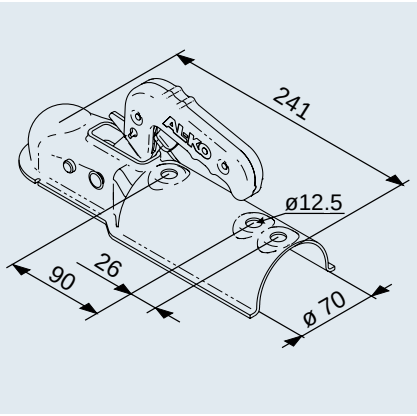

Coupling head AK 7 PLUS – 70 round version C	
SAP: KUPLNG KUGL AK7/C RD 70 PLUS	
Part no.	1 367 025
Perm. gross weight	750 kg
Nose load	75 kg
D / Dc value	7.19 kN
Material	steel
Tightening torque	75 Nm
ECE type approval no.	E1 55R-01 0164
	1.3 kg
	– 400 units

COUPLING HEAD AK 7 PLUS

for unbraked trailers up to 750 kg



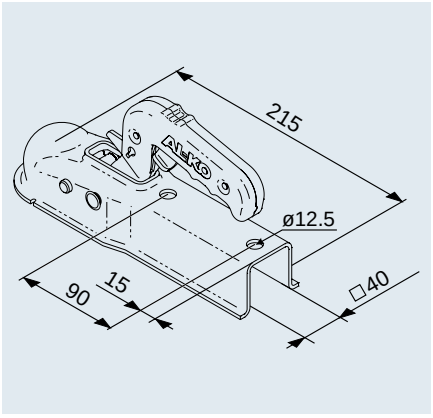

Coupling head AK 7 V PLUS – 40 square version I	
SAP: KUPLNG KUGL AK7 V/I VKT 40 PLUS	
Part no.	1 367 026
Perm. gross weight	750 kg
Nose load	75 kg
D / Dc value	7.19 kN
Material	steel
Tightening torque	75 Nm
ECE type approval no.	E1 55R-01 0232
	1.3 kg
	– 400 units



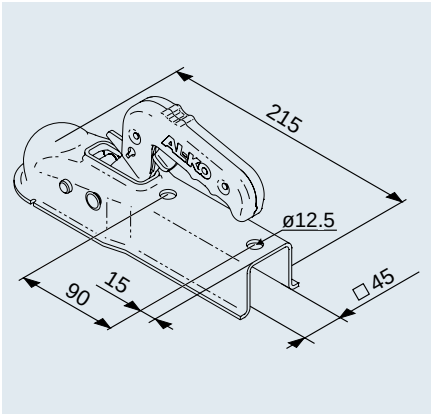

Coupling head AK 7 V PLUS – 45 square version G	
SAP: KUPLNG KUGL AK7 V/G VKT 45 PLUS	
Part no.	1 367 027
Perm. gross weight	750 kg
Nose load	75 kg
D / Dc value	7.19 kN
Material	steel
Tightening torque	75 Nm
ECE type approval no.	E1 55R-01 0232
	1.3 kg
	– 400 units



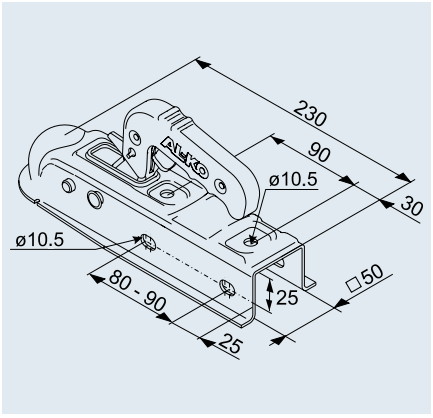

Coupling head AK 7 V PLUS – 50 square version D	
SAP: KUPLNG KUGL AK7 V/D VKT50 PLUS	
Part no.	1 224 339
Perm. gross weight	750 kg
Nose load	75 kg
D / Dc value	7.19 kN
Material	steel
Tightening torque	46 Nm
ECE type approval no.	E1 55R-01 0232
	1.3 kg
	– 400 units



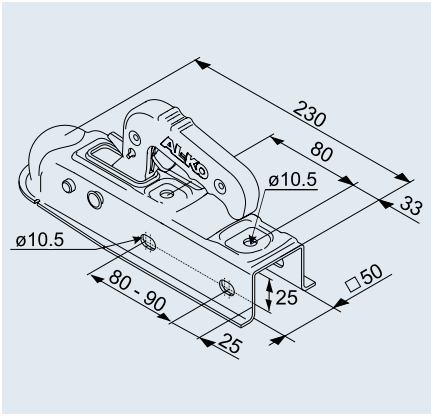

Coupling head AK 7 V PLUS – 50 square version D	
SAP: KUPLNG KUGL AK7 V/D VKT50 PLUS	
Part no.	1 225 004
Perm. gross weight	750 kg
Nose load	75 kg
D / Dc value	7.19 kN
Material	steel
Tightening torque	46 Nm
ECE type approval no.	E1 55R-01 0232
	1.3 kg
	– 400 units

COUPLING HEAD AK 7 PLUS

for unbraked trailers up to 750 kg



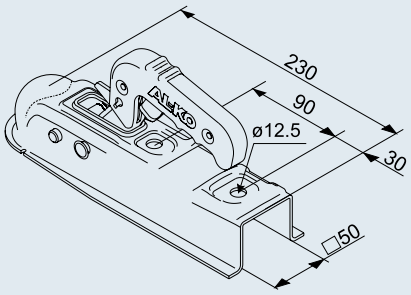

Coupling head AK 7 V PLUS – 50 square version D	
SAP: KUPLNG KUGL AK7 V/D VKT50 PLUS	
Part no.	1 224 334
Perm. gross weight	750 kg
Nose load	75 kg
D / Dc value	7.19 kN
Material	steel
Tightening torque	75 Nm
ECE type approval no.	E1 55R-01 0232
	1.3 kg
	– 400 units



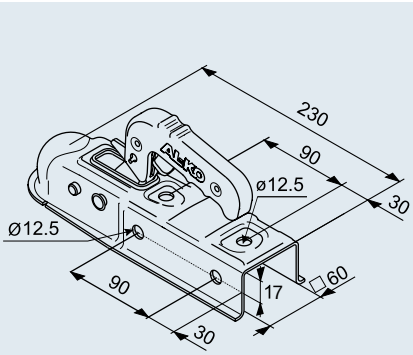

Coupling head AK 7 V PLUS – 60 square version E	
SAP: KUPLNG KUGL AK7 V/E VKT60 PLUS	
Part no.	1 224 743
Perm. gross weight	750 kg
Nose load	75 kg
D / Dc value	7.19 kN
Material	steel
Tightening torque	75 Nm
ECE type approval no.	E1 55R-01 0232
	1.3 kg
	– 400 units



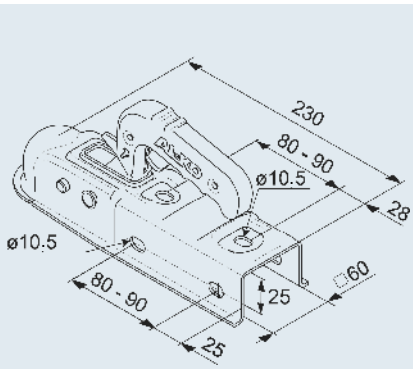

Coupling head AK 7 V PLUS – 60 square version E	
SAP: KUPLNG KUGL AK7 V/E VKT60 PLUS	
Part no.	1 224 343
Perm. gross weight	750 kg
Nose load	75 kg
D / Dc value	7.19 kN
Material	steel
Tightening torque	46 Nm
ECE type approval no.	E1 55R-01 0232
	1.3 kg
	– 400 units



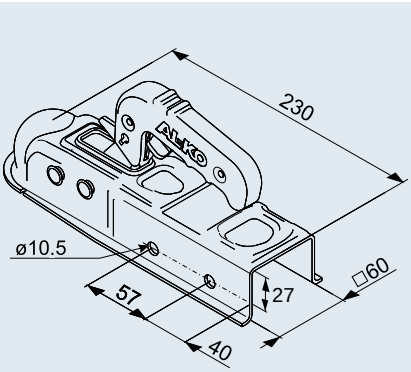

Coupling head AK 7 V PLUS – 60 square version E	
SAP: KUPLNG KUGL AK7 V/E VKT60 PLUS	
Part no.	1 224 342
Perm. gross weight	750 kg
Nose load	75 kg
D / Dc value	7.19 kN
Material	steel
Tightening torque	46 Nm
ECE type approval no.	E1 55R-01 0232
	1.3 kg
	– 400 units

COUPLING HEAD AK 7 PLUS

for unbraked trailers up to 750 kg



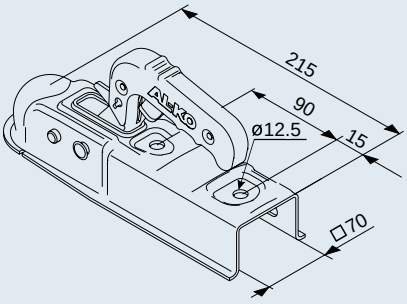

Coupling head AK 7 V PLUS – 70 square version H	
SAP: KUPLNG KUGL AK7 V/H VKT 70 PLUS	
Part no.	1 367 028
Perm. gross weight	750 kg
Nose load	75 kg
D / Dc value	7.19 kN
Material	steel
Tightening torque	75 Nm
ECE type approval no.	E1 55R-01 0232
	1.3 kg
	– 400 units



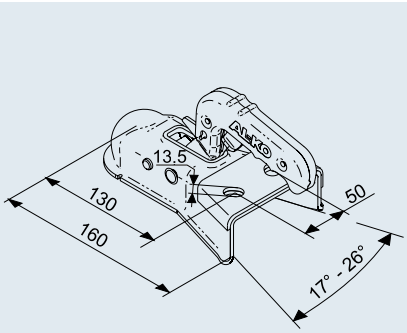

Coupling head AK 750 PLUS version A	
SAP: KUPLNG KUGL AK750 PLUS MIT PLATTE	
Part no.	1 367 021
Perm. gross weight	750 kg
Nose load	75 kg
D / Dc value	7.19 kN
Material	steel
Tightening torque	75 Nm
ECE type approval no.	E1 55R-01 0385
	1.3 kg
	– 300 units



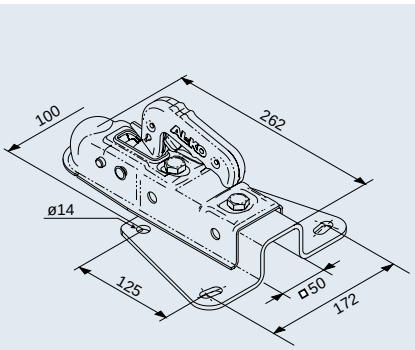

Coupling head AK 7 PLUS – 75 V version A	
SAP: ZUGVERBNDG 75 V-AK7	
Part no.	202 602
Perm. gross weight	750 kg
Nose load	75 kg
D / Dc value	7.19 kN
Material	steel
Tightening torque	75 Nm
ECE type approval no.	E1 55R-01 0848
	3.0 kg
	– 100 units





Soft-Dock	
SAP: SOFT-DOCK SCHWARZ AK7	
Part no.	693 552
suitable for coupling head	Type AK 7 PLUS, new version, with open position and prepared hook-in notches on the housing
Material	Rubber
	0.07 kg
	– –

DRAWBAR INSTALLATION 75 VR

for unbraked trailers up to 750 kg



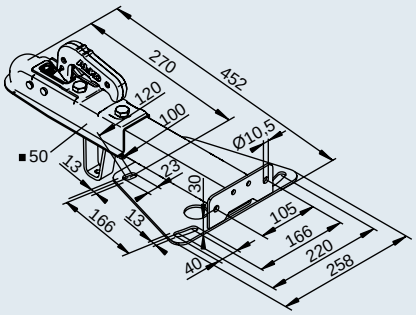

Drawbar installation 75 VR with coupling head AK 7 PLUS ☐50 – top installation without safety wire	
SAP: ZUGVERBNDG 75 VR OBENEINB M AK7	
Part no.	1 225 712
Barcode no.	4003718047752
Perm. gross weight	750 kg
Nose load	75 kg
D / Dc value	7.19 kN
Material	steel
Tightening torque	M10: 46 Nm; M12: 75 Nm
ECE type approval no.	Drawbar installation: E1 55R-01 2358 Coupling head: E1 55R-01 0232
	5.1 kg
	– 40 units



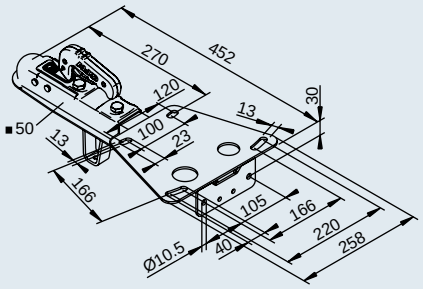

Drawbar installation 75 VR with coupling head AK 7 PLUS ☐50 – bottom installation without safety wire	
SAP: ZUGVERBNDG 75 VR UNTENEINB M AK7	
Part no.	1 225 713
Barcode no.	4003718047769
Perm. gross weight	750 kg
Nose load	75 kg
D / Dc value	7.19 kN
Material	steel
Tightening torque	M10: 46 Nm; M12: 75 Nm
ECE type approval no.	Drawbar installation: E1 55R-01 2358 Coupling head: E1 55R-01 0232
	5.1 kg
	– 40 units



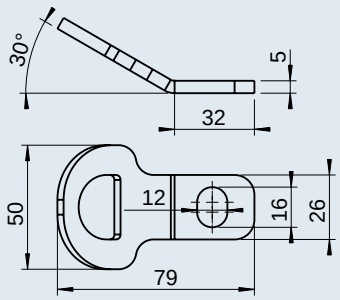

Strap	
SAP: LASCHE ABREISSSEIL FÜHRUNG	
Part no.	1 651 594
Barcode no.	4003718051537
Perm. gross weight	750 kg
Nose load	75 kg
D / Dc value	7.19 kN
Material	steel
	0.8 kg
	– –



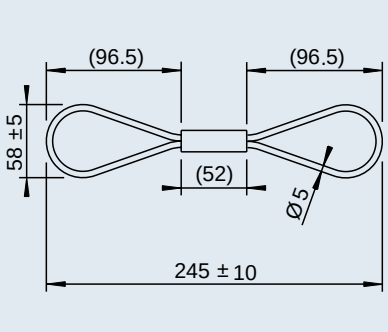

Safety wire	
SAP: FANGSEIL FÜR UNGEBREMSTE ANHÄNGER	
Part no.	1 236 099
Barcode no.	4003718047790
Perm. gross weight	750 kg
Nose load	75 kg
D / Dc value	7.19 kN
Material	steel
	0.3 kg
	– –

DRAWBAR INSTALLATION 75 VR

for unbraked trailers up to 750 kg



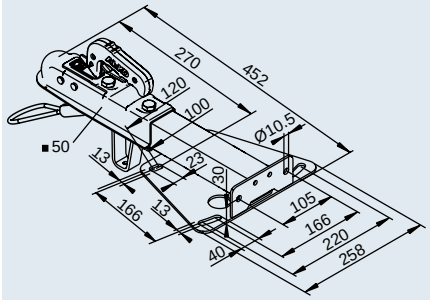

Drawbar installation 75 VR with coupling head AK 7 PLUS ☐50 – top installation with safety wire	
SAP: ZUGVERBNDG 75 VR OBENEINB M AK7	
Part no.	1 225 801
Barcode no.	4003718047776
Perm. gross weight	750 kg
Nose load	75 kg
D / Dc value	7.19 kN
Material	steel
Tightening torque	M10: 46 Nm; M12: 75 Nm
ECE type approval no.	Drawbar installation: E1 55R-01 2358 Coupling head: E1 55R-01 0232
	5.4 kg
	– 40 units



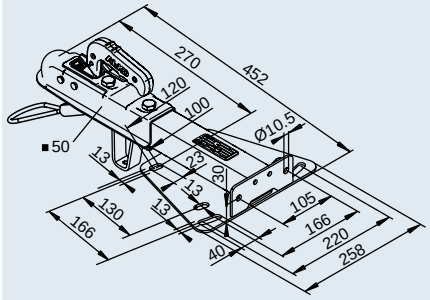

Drawbar installation 75 VR with coupling head AK 7 PLUS ☐50 – top installation with safety wire	
SAP: ZUGVERBNDG 75 VR OBENEINB M AK7	
Part no.	1 730 076
Barcode no.	4003718051544
Perm. gross weight	750 kg
Nose load	75 kg
D / Dc value	7.19 kN
Material	steel
Tightening torque	M10: 46 Nm; M12: 75 Nm
ECE type approval no.	Drawbar installation: E1 55R-01 2358 Coupling head: E1 55R-01 0232
	5.4 kg
	– 40 units



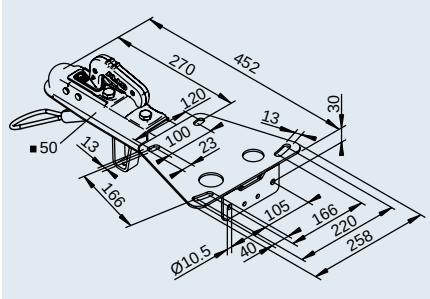

Drawbar installation 75 VR with coupling head AK 7 PLUS ☐50 – bottom installation with safety wire	
SAP: ZUGVERBNDG 75 VR UNTENEINB M AK7	
Part no.	1 225 723
Barcode no.	4003718047783
Perm. gross weight	750 kg
Nose load	75 kg
D / Dc value	7.19 kN
Material	steel
Tightening torque	M10: 46 Nm; M12: 75 Nm
ECE type approval no.	Drawbar installation: E1 55R-01 2358 Coupling head: E1 55R-01 0232
	5.4 kg
	– 40 units

COUPLING HEAD WW 8

for unbraked trailers up to 800 kg



WW 8-C

Optionally with holder (HAL)



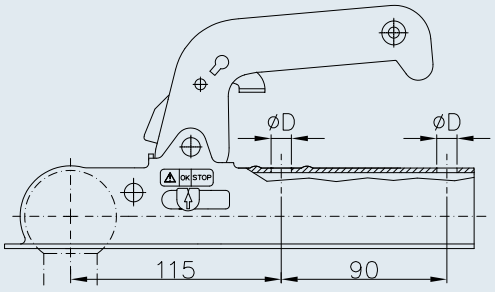

Type	D
WW 8–A	11,0
WW 8–B	11,0
WW 8–C	12,5

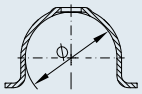

Coupling head WW 8-A

SAP: KUPLNG KUGL WW 8-A	
Part no.	1860730 *(W 1018)*
Drawbar Ø	50 mm
Ball Ø	50 mm
Perm. gross weight	800 kg
Nose load	75 kg
D / Dc value	7.7 kN
Material	steel
ECE type approval no.	E1 55R-01 2211
	1.23 kg
	– 400 units
	12

Coupling head WW 8-A + holder

SAP: KUPLNG KUGL WW 8-A+HAL	
Part no.	1860731 *(W 1019)*
Drawbar Ø	50 mm
Ball Ø	50 mm
Perm. gross weight	800 kg
Nose load	75 kg
D / Dc value	7.7 kN
Material	steel
ECE type approval no.	E1 55R-01 2211
	1.25 kg
	– 400 units
	12

Coupling head WW 8-B

SAP: KUPLNG KUGL WW 8-B	
Part no.	1860732 *(W 1020)*
Drawbar Ø	60 mm
Ball Ø	50 mm
Perm. gross weight	800 kg
Nose load	75 kg
D / Dc value	7.7 kN
Material	steel
ECE type approval no.	E1 55R-01 2211
	1.22 kg
	– 400 units
	12

Coupling head WW 8-B + holder

SAP: KUPLNG KUGL WW 8-B+HAL	
Part no.	1860733 *(W 1021)*
Drawbar Ø	60 mm
Ball Ø	50 mm
Perm. gross weight	800 kg
Nose load	75 kg
D / Dc value	7.7 kN
Material	steel
ECE type approval no.	E1 55R-01 2211
	1.24 kg
	– 400 units
	12

Coupling head WW 8-C

SAP: KUPLNG KUGL WW 8-C	
Part no.	1860734 *(W 1022)*
Drawbar Ø	70 mm
Ball Ø	50 mm
Perm. gross weight	800 kg
Nose load	75 kg
D / Dc value	7.7 kN
Material	steel
ECE type approval no.	E1 55R-01 2211
	1.24 kg
	– 400 units
	12

Coupling head WW 8-C + holder

SAP: KUPLNG KUGL WW 8-C+HAL	
Part no.	1860735 *(W 1023)*
Drawbar Ø	70 mm
Ball Ø	50 mm
Perm. gross weight	800 kg
Nose load	75 kg
D / Dc value	7.7 kN
Material	steel
ECE type approval no.	E1 55R-01 2211
	1.26 kg
	– 400 units
	12

COUPLING HEAD WW 8

for unbraked trailers up to 800 kg



WW 8-H

Optionally with holder (HAL)



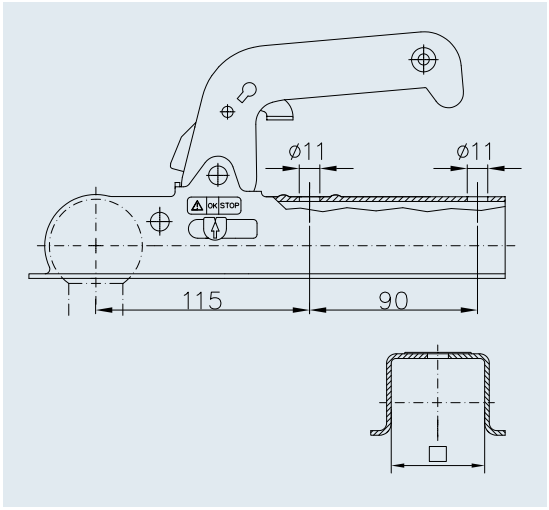

Coupling head WW 8-D30	
SAP: KUPLNG KUGL WW 8-D30	
Part no.	1860736 *(W 1024)*
Drawbar Ø	30 mm
Ball Ø	50 mm
Perm. gross weight	800 kg
Nose load	75 kg
D / Dc value	7.7 kN
Material	steel
ECE type approval no.	E1 55R-01 2211
	1.27 kg
	– 400 units
	12

Coupling head WW 8-D40	
SAP: KUPLNG KUGL WW 8-D40	
Part no.	1860737 *(W 1026)*
Drawbar Ø	40 mm
Ball Ø	50 mm
Perm. gross weight	800 kg
Nose load	75 kg
D / Dc value	7.7 kN
Material	steel
ECE type approval no.	E1 55R-01 2211
	1.27 kg
	– 400 units
	12

Coupling head WW 8-D45 + holder	
SAP: KUPLNG KUGL WW 8-D45+HAL	
Part no.	1860739 *(W 1029)*
Drawbar Ø	45 mm
Ball Ø	50 mm
Perm. gross weight	800 kg
Nose load	75 kg
D / Dc value	7.7 kN
Material	steel
ECE type approval no.	E1 55R-01 2211
	1.29 kg
	– 400 units
	12

Coupling head WW 8-E	
SAP: KUPLNG KUGL WW 8-E	
Part no.	1860740 *(W 1030)*
Drawbar Ø	50 mm
Ball Ø	50 mm
Perm. gross weight	800 kg
Nose load	75 kg
D / Dc value	7.7 kN
Material	steel
ECE type approval no.	E1 55R-01 2211
	1.25 kg
	– 400 units
	12

Coupling head WW 8-E + holder	
SAP: KUPLNG KUGL WW 8-E+HAL	
Part no.	1860741 *(W 1031)*
Drawbar Ø	50 mm
Ball Ø	50 mm
Perm. gross weight	800 kg
Nose load	75 kg
D / Dc value	7.7 kN
Material	steel
ECE type approval no.	E1 55R-01 2211
	1.27 kg
	– 400 units
	12

COUPLING HEAD WW 8

for unbraked trailers up to 800 kg



WW 8-H

Optionally with holder (HAL)



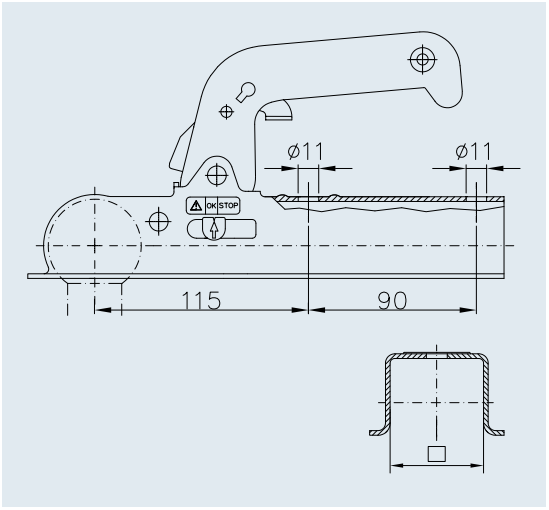

Coupling head WW 8-G	
SAP: KUPLNG KUGL WW 8-G	
Part no.	1860742 *(W 1032)*
Drawbar Ø	60 mm
Ball Ø	50 mm
Perm. gross weight	800 kg
Nose load	75 kg
D / Dc value	7.7 kN
Material	steel
ECE type approval no.	E1 55R-01 2211
	1.27 kg
	– 400 units
	12

Coupling head WW 8-G + holder	
SAP: KUPLNG KUGL WW 8-G+HAL	
Part no.	1860743 *(W 1033)*
Drawbar Ø	60 mm
Ball Ø	50 mm
Perm. gross weight	800 kg
Nose load	75 kg
D / Dc value	7.7 kN
Material	steel
ECE type approval no.	E1 55R-01 2211
	1.29 kg
	– 400 units
	12

Coupling head WW 8-H	
SAP: KUPLNG KUGL WW 8-H	
Part no.	1860744 *(W 1034)*
Drawbar Ø	70 mm
Ball Ø	50 mm
Perm. gross weight	800 kg
Nose load	75 kg
D / Dc value	7.7 kN
Material	steel
ECE type approval no.	E1 55R-01 2211
	1.31 kg
	– 400 units
	12

Coupling head WW 8-H + holder	
SAP: KUPLNG KUGL WW 8-H+HAL	
Part no.	1860745 *(W 1035)*
Drawbar Ø	70 mm
Ball Ø	50 mm
Perm. gross weight	800 kg
Nose load	75 kg
D / Dc value	7.7 kN
Material	steel
ECE type approval no.	E1 55R-01 2211
	1.33 kg
	– 400 units
	12

COUPLING HEAD WW 8

for unbraked trailers up to 800 kg



WW 8-G+SB

Optionally with holder (HAL)



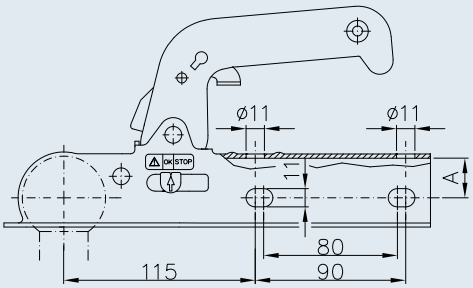

Type	A
WW 8–E+SB	25
WW 8–E+SB+HAL7P	25
WW 8–G+SB	25
WW 8–G+SB+HAL7P	25

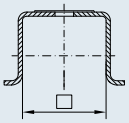

6

Coupling head WW 8-E + SB	
SAP: KUPLNG KUGL WW 8-E+SB	
Part no.	1860748 *(W 1039)*
Drawbar Ø	50 mm
Ball Ø	50 mm
Perm. gross weight	800 kg
Nose load	75 kg
D / Dc value	7.7 kN
Material	steel
ECE type approval no.	E1 55R-01 2211
	1.25 kg
	– 400 units
	12

Coupling head WW 8-E + SB + holder	
SAP: KUPLNG KUGL WW 8-E+SB+HAL	
Part no.	1860749 *(W 1041)*
Drawbar Ø	50 mm
Ball Ø	50 mm
Perm. gross weight	800 kg
Nose load	75 kg
D / Dc value	7.7 kN
Material	steel
ECE type approval no.	E1 55R-01 2211
	1.27 kg
	– 400 units
	12

Coupling head WW 8-G + SB	
SAP: KUPLNG KUGL WW 8-G+SB	
Part no.	1860747 *(W 1038)*
Drawbar Ø	60 mm
Ball Ø	50 mm
Perm. gross weight	800 kg
Nose load	75 kg
D / Dc value	7.7 kN
Material	steel
ECE type approval no.	E1 55R-01 2211
	1.27 kg
	– 400 units
	12

Coupling head WW 8-G + SB + holder	
SAP: KUPLNG KUGL WW 8-G+SB+HAL	
Part no.	1860746 *(W 1037)*
Drawbar Ø	60 mm
Ball Ø	50 mm
Perm. gross weight	800 kg
Nose load	75 kg
D / Dc value	7.7 kN
Material	steel
ECE type approval no.	E1 55R-01 2211
	1.29 kg
	– 400 units
	12

COUPLING HEAD WW 8

for unbraked trailers up to 800 kg



Incl. holder (HAL)



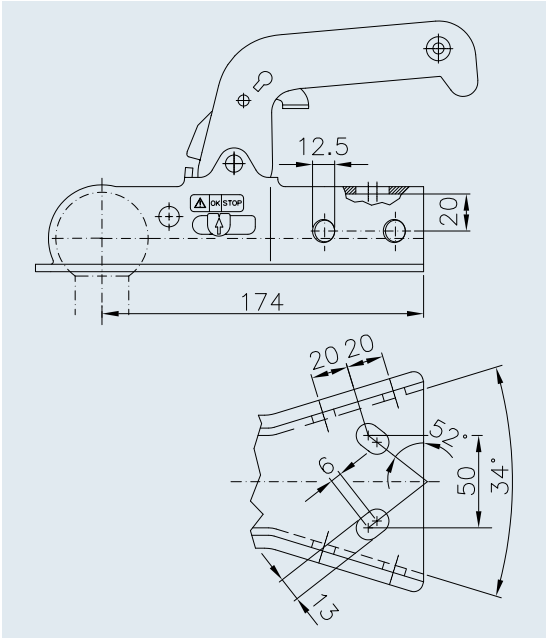

Coupling head WW 8-Y + holder	
SAP: KUPLNG KUGL WW 8-Y+HAL	
Part no.	1860750 *(W1044)*
Drawbar	V-drawbar
Ball Ø	50 mm
Perm. gross weight	800 kg
Nose load	75 kg
D / Dc value	7.7 kN
Material	steel
ECE type approval no.	E1 55R-01 2211
	1.49 kg
	– 400 units
	12

COUPLING HEAD WW 8

for unbraked trailers up to 800 kg



WW 8-G + V-ADAPTER

Optionally with holder (HAL)



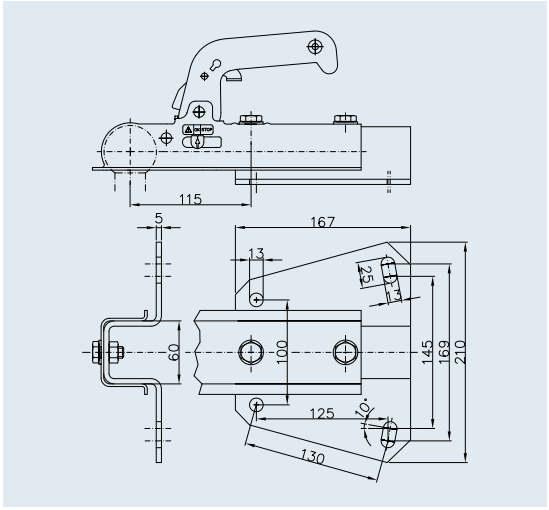



WW 8-E + SB + VL-ADAP + holder

Incl. holder (HAL)



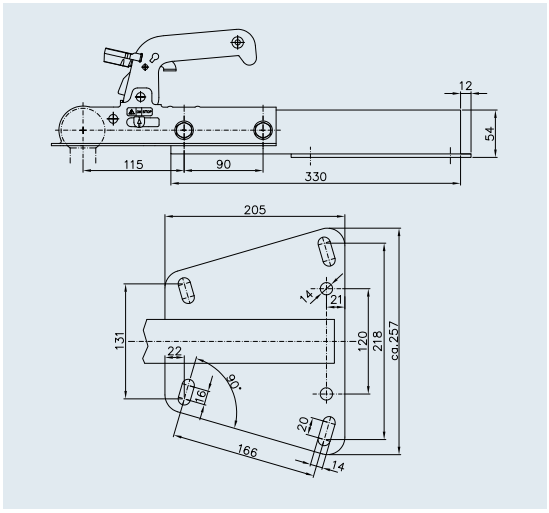

Coupling head WW 8-G + V-ADAPTER	
SAP: KUPLNG KUGL WW 8-E+V-ADAPTER+HAL	
Part no.	1860752 *(W 1050)*
Drawbar	V-drawbar
Ball Ø	50 mm
Perm. gross weight	800 kg
Nose load	75 kg
D / Dc value	7.7 kN
Material	steel
ECE type approval no.	E1 55R-01 2211
	3.05 kg
	– 200 units
	12

Coupling head WW 8-E + SB + VL-ADAP + holder	
SAP: KUPLNG KUGL WW 8-E+VL-ADAP+HAL	
Part no.	1860751 *(W 1055)*
Drawbar	V-drawbar
Ball Ø	50 mm
Perm. gross weight	800 kg
Nose load	75 kg
D / Dc value	7.7 kN
Material	steel
ECE type approval no.	E1 55R-01 2211
	3.78 kg
	– 100 units
	12

COUPLING HEAD WW 150

for unbraked trailers up to 1,500 kg



Optionally with holder (HAL)



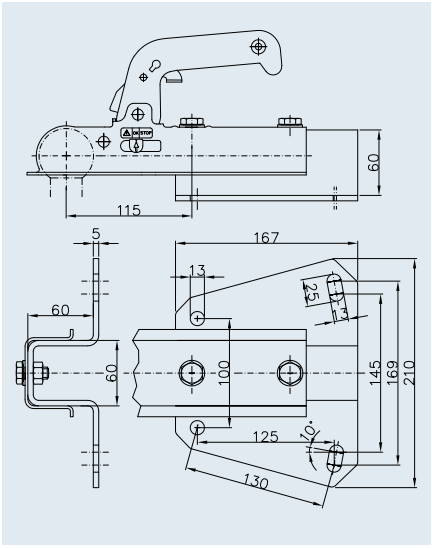

Coupling head WW 150-VF + V-ADAPTER	
SAP: KUPLNG KUGL WW 150-VF+V-ADAPTER	
Part no.	1860764 *(W 1167)*
Drawbar	V-drawbar
Ball Ø	50 mm
Perm. gross weight	1,500 kg
Nose load	100 kg
D / Dc value	14.1 kN
Material	steel
ECE type approval no.	E1 55R-01 2009
	3.78 kg
	– 200 units
	12

COUPLING HEAD WW 150

for unbraked trailers up to 1,500 kg



Optionally with holder (HAL)



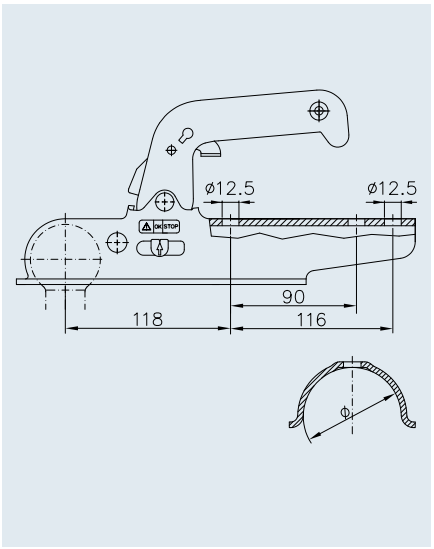

Coupling head WW 150-RG	
SAP: KUPLNG KUGL WW 150-RG	
Part no.	1860761 *(W 1164)*
Drawbar Ø	70 mm
Ball Ø	50 mm
Perm. gross weight	1,500 kg
Nose load	100 kg
D / Dc value	14.1 kN
Material	steel
ECE type approval no.	E1 55R-01 0376
	1.69 kg
	– 400 units
	12

COUPLING HEAD WW 150

for unbraked trailers up to 1,500 kg



WW 150-VF

Optionally with holder (HAL)



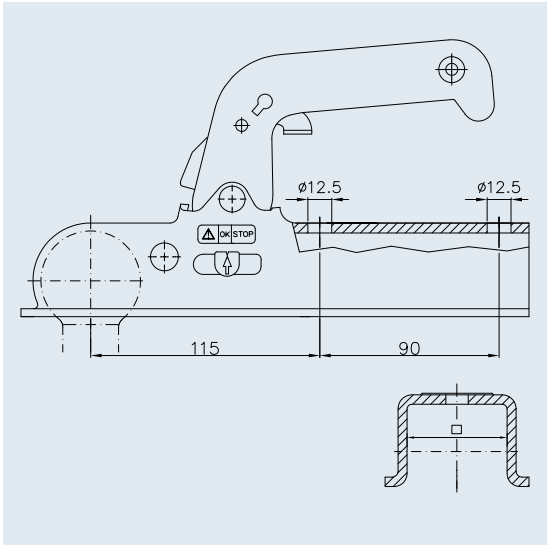

Coupling head WW 150-VF + holder	
SAP: KUPLNG KUGL WW 150-VF+HAL	
Part no.	1860762 *(W1165)*
Drawbar Ø	60 mm
Ball Ø	50 mm
Perm. gross weight	1,500 kg
Nose load	100 kg
D / Dc value	14.1 kN
Material	steel
ECE type approval no.	E1 55R-01 0434
	1.74 kg
	– 400 units
	12

Coupling head WW 150-VF	
SAP: KUPLNG KUGL WW 150-VF	
Part no.	1860763 *(W1166)*
Drawbar Ø	60 mm
Ball Ø	50 mm
Perm. gross weight	1,500 kg
Nose load	100 kg
D / Dc value	14.1 kN
Material	steel
ECE type approval no.	E1 55R-01 0434
	1.74 kg
	– 400 units
	12

Coupling head WW 150-VG	
SAP: KUPLNG KUGL WW 150-VG	
Part no.	1860765 *(W1168)*
Drawbar Ø	70 mm
Ball Ø	50 mm
Perm. gross weight	1,500 kg
Nose load	100 kg
D / Dc value	14.1 kN
Material	steel
ECE type approval no.	E1 55R-01 0434
	1.74 kg
	– 400 units
	12

Coupling head WW 150-VG + holder	
SAP: KUPLNG KUGL WW 150-VG+HAL	
Part no.	1860766 *(W1169)*
Drawbar Ø	70 mm
Ball Ø	50 mm
Perm. gross weight	1,500 kg
Nose load	100 kg
D / Dc value	14.1 kN
Material	steel
ECE type approval no.	E1 55R-01 0434
	1.74 kg
	– 400 units
	12

COUPLING HEAD WW 20

for unbraked trailers up to 2,000 kg

Zn

BASIC



WW 20-F2

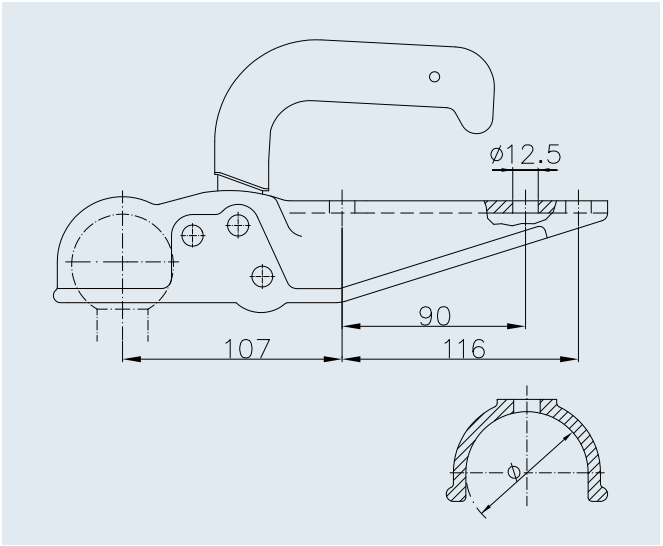

Coupling head WW 20-F4	
SAP: KUPLNG KUGL WW 20-F4	
Part no.	1860789 *(W 1070)*
Drawbar Ø	50 mm
Ball Ø	50 mm
Perm. gross weight	2,000 kg
Nose load	100 kg
D / Dc value	18.5 kN
Material	Malleable cast iron
ECE type approval no.	E1 55R-01 2251
	1.69 kg
	300 units 350 units
	12

Coupling head WW 20-F1	
SAP: KUPLNG KUGL WW 20-F1	
Part no.	1860790 *(W 1074)*
Drawbar Ø	60 mm
Ball Ø	50 mm
Perm. gross weight	2,000 kg
Nose load	100 kg
D / Dc value	18.5 kN
Material	Malleable cast iron
ECE type approval no.	E1 55R-01 2251
	1.69 kg
	300 units 350 units
	12

Coupling head WW 20-F2	
SAP: KUPLNG KUGL WW 20-F2	
Part no.	1860791 *(W 1078)*
Drawbar Ø	70 mm
Ball Ø	50 mm
Perm. gross weight	2,000 kg
Nose load	100 kg
D / Dc value	18.5 kN
Material	Malleable cast iron
ECE type approval no.	E1 55R-01 2251
	1.69 kg
	300 units 350 units
	12

COUPLING HEAD WW 200

for unbraked trailers up to 3,000 kg

Hole for commercial shackle lock



WW 200-C7-H

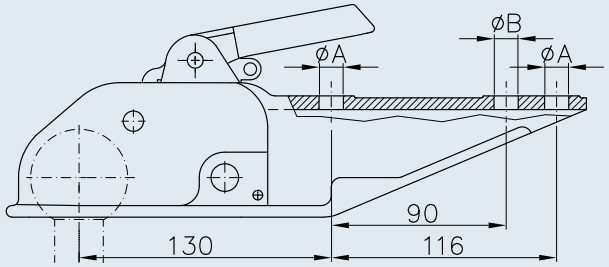

Type	øA	øB
WW 200–C7–H	12,5	12,5
WW 200–C4–H	12,5	—

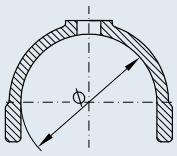

Coupling head WW 200-C7-H

SAP: KUPLNG KUGL WW 200-C7-H	
Part no.	1860792 *(W 1082)*
Drawbar Ø	70 mm
Ball Ø	50 mm
Perm. gross weight	3,000 kg
Nose load	150 kg
D / Dc value	27.0 kN
Material	Malleable cast iron
ECE type approval no.	E1 55R-01 0338
	3.38 kg
	250 units 300 units
	12

Coupling head WW 200-C4-H

SAP: KUPLNG KUGL WW 200-C4-H	
Part no.	1860793 *(W 1086)*
Drawbar Ø	80 mm
Ball Ø	50 mm
Perm. gross weight	3,000 kg
Nose load	150 kg
D / Dc value	27.0 kN
Material	Malleable cast iron
ECE type approval no.	E1 55R-01 0338
	3.65 kg
	250 units 300 units
	12

COUPLING HEAD AK 161 / AK 270

for braked trailers up to 2,700 kg



SAFETY ADVANTAGE 1

Open position
The hand grip points diagonally upwards and indicates to the operator that it is open.



SOFT TOUCH GRIP

A soft and therefore adhesive plastic mixture is used in the red area of the hand grip. In addition, the projection on the end of the hand grip serves as an anti-slip protection.

SAFETY ADVANTAGE 2

Closed position
The vehicle's ball is fully inserted and has released the securing lever.
Only now does the hand grip assume the horizontal position and indicate to the operator that a secure connection has been created.



WEAR INDICATOR

As long as the marking is in the positive range, the tow hitch is OK.



SOFT-DOCK AS STANDARD

- Protection against scratching
- Shin protection

Securing lever for flawless hitching

SAFETY ADVANTAGE 3

Indicator for correct hitching
In the closed position, the green safety indicator is additionally pushed out by the vehicle's coupling head, and is therefore visible. It once again indicates to the operator that the trailer is securely connected to the vehicle. This prevents unsuccessful locking. The journey may now start.

OPTIONAL LOCK ACCESSORY

Effective protection against rapid unauthorised access in the coupled and uncoupled state.



COUPLING HEAD AK 161

for braked trailers up to 1,600 kg



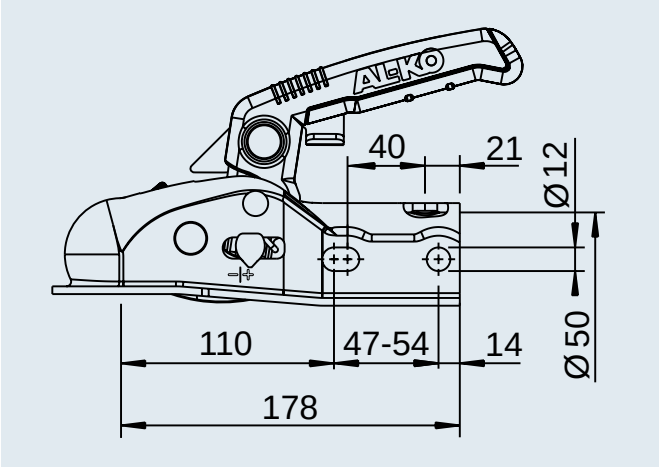



Coupling head AK 161 with Soft-Dock	
SAP: KUPLNG KUGL AK161 D50 M BEDANLEIT	
Part no.	1 730 219
Barcode no.	4003718049756
Perm. gross weight	1,600 kg
Nose load	120 kg
D / Dc value	14.95 kN
Material	steel
Holes	horizontal + cross
Tightening torque	75 Nm
ECE type approval no.	E1 55R-01 2671
	1.6 kg
	– 288 units



Coupling head AK 161 with Soft-Dock, spacers Ø 35/45	
SAP: KUPLNG KUGL AK161 D50/45/35 M BEDANLEIT	
Part no.	1 730 218
Barcode no.	4003718049749
Perm. gross weight	1,600 kg
Nose load	120 kg
D / Dc value	14.95 kN
Material	steel
Holes	horizontal + cross
Tightening torque	75 Nm
ECE type approval no.	E1 55R-01 2671
	1.7 kg
	– 156 units



Safety kit for coupling head AK 161 with Soft-Dock, spacers Ø 35/45, lock	
SAP: KIT SAFETY AK161 D50/45/35 M ZUBEHÖR	
Part no.	1 730 220
Barcode no.	4003718049763
Perm. gross weight	1,600 kg
Nose load	120 kg
D / Dc value	14.95 kN
Material	steel
Holes	horizontal + cross
Tightening torque	75 Nm
ECE type approval no.	E1 55R-01 2671
	1.9 kg
	– 156 units



Soft-Dock suitable for coupling head AK 161 / AK 270	
SAP: SOFT-DOCK SCHWARZ	
Part no.	693 394
Barcode no.	4003718051698
	0.04 kg
	– –

COUPLING HEAD AK 270

for braked trailers up to 2,700 kg



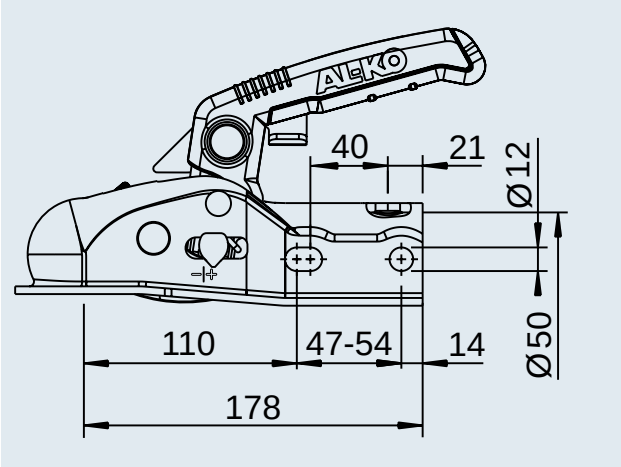



Coupling head AK 270 with Soft-Dock	
SAP: KUPLNG KUGL AK270 D50 M BEDANLEIT	
Part no.	1 730 082
Barcode no.	4003718049770
Perm. gross weight	2,700 kg
Nose load	120 kg
D / Dc value	21.6 kN
Material	steel
Holes	horizontal + cross
Tightening torque	75 Nm
ECE type approval no.	E1 55R-01 2669
	1.7 kg
	– 288 units



Coupling head AK 270 with Soft-Dock, spacers Ø 35/40/45	
SAP: KUGL AK270 D50/45/40/35 M BA	
Part no.	1 730 083
Barcode no.	4003718049787
Perm. gross weight	2,700 kg
Nose load	120 kg
D / Dc value	21.6 kN
Material	steel
Holes	horizontal + cross
Tightening torque	75 Nm
ECE type approval no.	E1 55R-01 2669
	1.9 kg
	– 156 units



Safety kit for AK 270 with Soft-Dock, spacers Ø 35/40/45, lock	
SAP: KIT SAFETY AK270 D50/45/40/35 ZUBEHÖR	
Part no.	1 730 084
Barcode no.	4003718049794
Perm. gross weight	2,700 kg
Nose load	120 kg
D / Dc value	21.6 kN
Material	steel
Holes	horizontal + cross
Tightening torque	75 Nm
ECE type approval no.	E1 55R-01 2669
	1.9 kg
	– 156 units



Lock barrel with Safety-Ball suitable for coupling head AK 161 / AK 270	
SAP: KIT STECKSCHLOSS AK161/AK270	
Part no.	1 730 411
Barcode no.	4003718051704
	0.15 kg
	– –

PROFI COUPLING HEAD

for braked trailers up to 3,500 kg

SAFE HITCHING UP



Clear open position
The hand grip points diagonally upwards and indicates to the operator:
hitch is not yet locked!

Protective cover for safe hitching



Wear indicator
Provides information about the status of your trailer's hitch as well as the towing hitch of your car.



Clear closed position
The car's towing hitch engages. Only at this point does the hand grip move to the horizontal position, and indicate to the user:
hitch is locked!



Safety indicator
If the green cylinder is visible in hitched condition, you know that the hitch has been positioned correctly on your towing vehicle's ball.

MORE SAFETY – MORE PROTECTION



"Safety-Ball" option for when the trailer is stationary

1. When the trailer is unhitched, simply insert the Safety-Ball into the hitch. The hitch handle automatically moves to the "Closed" position.
2. The hitch can now be secured with the key to prevent quick access.
   (For details, see instructions for use).



"Anti-theft device" option for towing and when stationary
Insert key into lock barrel and secure it. *(For details, see instructions for use).*



"Soft-Dock" option
(Ramming protection) Protects the rear of the vehicle against damage.

COUPLING HEAD AK 301 PROFI

for braked trailers up to 3,000 kg



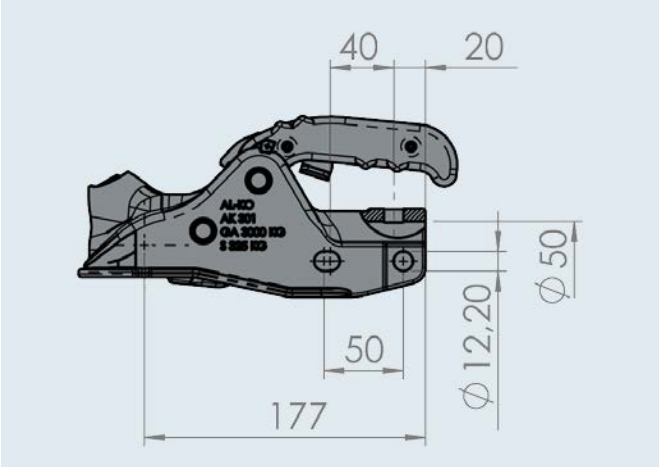



PROFI V coupling head type AK 301	
SAP: KUPLNG KUGL AK301 D50	
Part no.	1 221 746
Perm. gross weight	3,000 kg
Nose load	325 kg
D / Dc value	26.9 kN
Material	Cast iron
Holes	horizontal + cross
Tightening torque	75 Nm
ECE type approval no.	E1 55R-01 1594
	2.85 kg
	– 200 units



PROFI coupling head type AK 301 with Soft-Dock	
SAP: KUPLNG KUGL AK301 D50/45 SOFTDOCK VERP	
Part no.	1 223 715
Perm. gross weight	3,000 kg
Nose load	325 kg
D / Dc value	26.9 kN
Material	Cast iron
Holes	horizontal + cross
Tightening torque	75 Nm
ECE type approval no.	E1 55R-01 1594
	3.25 kg
	– 125 units



PROFI V Safety Kit for AK 301	
SAP: KIT SAFETY AK301 D50/45 M ZUBEHÖR VERP	
Part no.	1 223 427
Perm. gross weight	3,000 kg
Nose load	325 kg
D / Dc value	26.9 kN
Material	Cast iron
Holes	horizontal + cross
Tightening torque	75 Nm
ECE type approval no.	E1 55R-01 1594
	3.45 kg
	– 125 units

COUPLING HEAD AK 351 PROFI

for braked trailers up to 3,500 kg



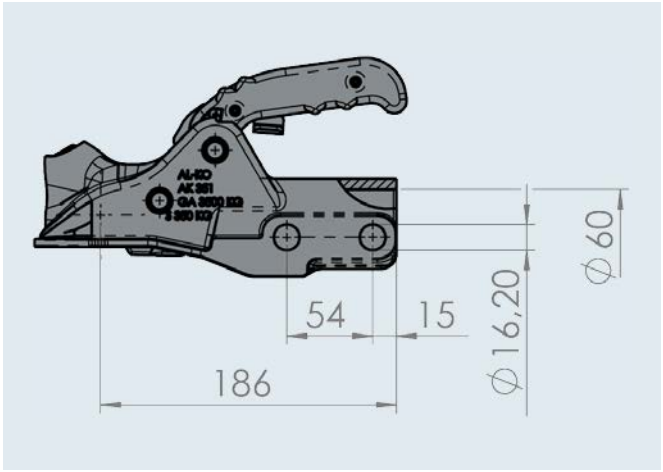





PROFI V coupling head type AK 351

SAP: KUPLNG KUGL AK351 D60	
Part no.	1 222 636
Perm. gross weight	3,500 kg
Nose load	350 kg
D / Dc value	31.0 kN
Material	Cast iron
Holes	horizontal
Tightening torque	195 Nm
ECE type approval no.	E1 55R-01 1595
	3.0 kg
	– 200 units



PROFI coupling head type AK 351 with Soft-Dock

SAP: KUPLNG KUGL AK351 D60 M SOFTDOCK VERP	
Part no.	1 223 716
Perm. gross weight	3,500 kg
Nose load	350 kg
D / Dc value	31.0 kN
Material	Cast iron
Holes	horizontal
Tightening torque	195 Nm
ECE type approval no.	E1 55R-01 1595
	3.4 kg
	– 125 units



PROFI V Safety Kit for AK 351

SAP: KIT SAFETY AK351 D60 M ZUBEHÖR VERP	
Part no.	1 223 428
Perm. gross weight	3,500 kg
Nose load	350 kg
D / Dc value	31.0 kN
Material	Cast iron
Holes	horizontal
Tightening torque	195 Nm
ECE type approval no.	E1 55R-01 1595
	3.6 kg
	– 125 units

PROFI V coupling head type AK 351-351 ZA

SAP: KUPLNG KUGL AK351-351ZA D60 M12 VERP	
Part no.	1 224 333
Perm. gross weight	3,500 kg
Nose load	350 kg
D / Dc value	31.0 kN
Material	Cast iron
Holes	horizontal + cross
Tightening torque	75 Nm
ECE type approval no.	E1 55R-01 1594
	3.0 kg
	– 200 units



COUPLING HEAD WW 13 / WW 150

for braked trailers up to 1,500 kg



WW 13-N

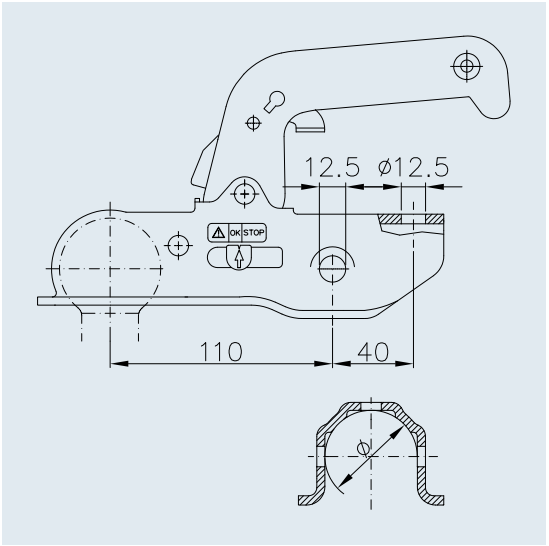

Coupling head WW 13-N

SAP: KUPLNG KUGL WW 13-N	
Part no.	1860759 *(W 1100)*
Drawbar Ø	45 – 46 mm
Ball Ø	50 mm
Perm. gross weight	1,500 kg
Nose load	100 kg
D / Dc value	14.1 kN
Material	steel
ECE type approval no.	E1 55R-01 1086
	1.36 kg
	– 400 units
	12

Coupling head WW 150-RB

SAP: KUPLNG KUGL WW 150-RB	
Part no.	1860760 *(W 1162)*
Drawbar Ø	50 – 51 mm
Ball Ø	50 mm
Perm. gross weight	1,500 kg
Nose load	100 kg
D / Dc value	14.1 kN
Material	steel
ECE type approval no.	E1 55R-01 0376
	1.41 kg
	– 400 units
	12

COUPLING HEAD WW 220

for braked trailers up to 2,200 kg



WW 220-RA

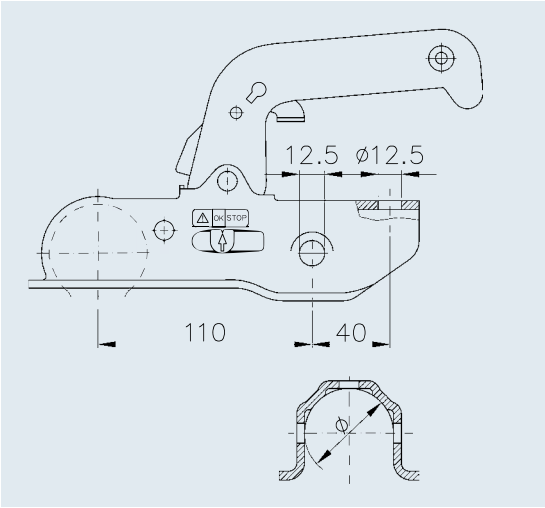

Coupling head WW 220-RA	
SAP: KUPLNG KUGL WW 220 R-A	
Part no.	1861584 *(W 1170)*
Drawbar Ø	45 – 46 mm
Ball Ø	50 mm
Perm. gross weight	2,200 kg
Nose load	100 kg
D / Dc value	20.2 kN
Material	steel
ECE type approval no.	E1 55R-01 0399
	1.77 kg
	– 400 units
	12

Coupling head WW 220-RB	
SAP: KUPLNG KUGL WW 220 R-B	
Part no.	1861585 *(W 1172)*
Drawbar Ø	50 – 51 mm
Ball Ø	50 mm
Perm. gross weight	2,200 kg
Nose load	100 kg
D / Dc value	20.2 kN
Material	steel
ECE type approval no.	E1 55R-01 0399
	1.77 kg
	– 400 units
	12

COUPLING HEAD WW 200

for braked trailers up to 3,000 kg



WW 200-B3-H

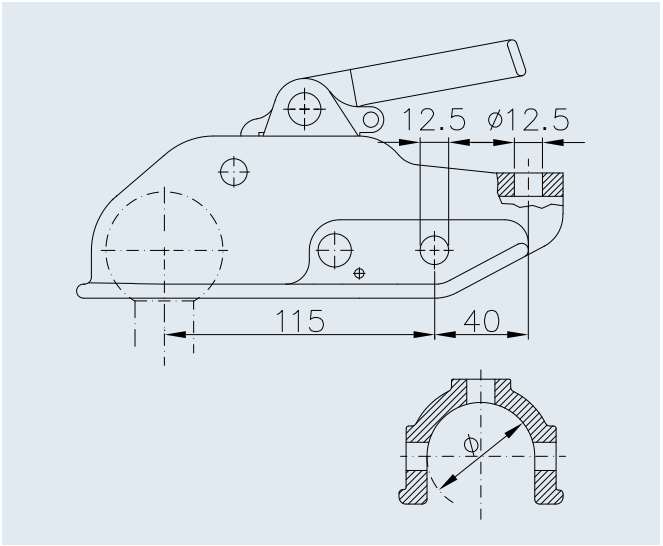

Coupling head WW 200-B3-H	
SAP: KUPLNG KUGL WW 200-B3-H	
Part no.	1860812 *(W 1260)*
Drawbar Ø	45 – 46 mm
Ball Ø	50 mm
Perm. gross weight	3,000 kg
Nose load	150 kg
D / Dc value	27.0 kN
Material	Malleable cast iron
ECE type approval no.	E1 55R-01 0338
	2.98 kg
	300 units 350 units
	12

Coupling head WW 200-B5-H	
SAP: KUPLNG KUGL WW 200-B5-H	
Part no.	1860813 *(W 1270)*
Drawbar Ø	50 – 51 mm
Ball Ø	50 mm
Perm. gross weight	3,000 kg
Nose load	150 kg
D / Dc value	27.0 kN
Material	Malleable cast iron
ECE type approval no.	E1 55R-01 0338
	3.24 kg
	300 units 350 units
	12

COUPLING HEAD WW 30

for braked trailers up to 3,000 kg



WW 30-D2

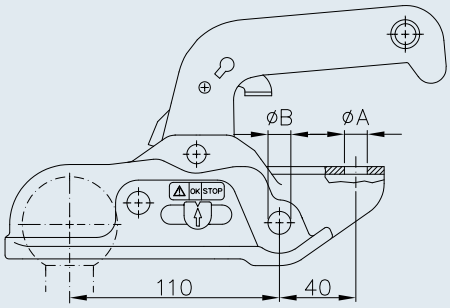

Type	øA	øB
WW 30–D2	12.5	12.5
WW 30–D3–1212	12.5	12.5
WW 30–D3–1412	12.5	14.5
WW 30–D3–1414	14.5	14.5
WW 30–D6	12.5	12.5

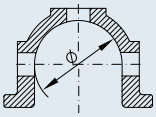

Coupling head WW 30-D2	
SAP: KUPLNG KUGL WW 30-D2-K1212	
Part no.	1860795 *(W 1135)*
Drawbar Ø	45 – 46 mm
Ball Ø	50 mm
Perm. gross weight	3,000 kg
Nose load	150 kg
D / Dc value	27.0 kN
Material	Malleable cast iron
ECE type approval no.	E1 55R-01 0640
	2.36 kg
	– 400 units
	12

Coupling head WW 30-D3-1212	
SAP: KUPLNG KUGL WW 30-D3-K1212	
Part no.	1860798 *(W 1140)*
Drawbar Ø	50 – 51 mm
Ball Ø	50 mm
Perm. gross weight	3,000 kg
Nose load	150 kg
D / Dc value	27.0 kN
Material	Malleable cast iron
ECE type approval no.	E1 55R-01 0640
	2.38 kg
	– 400 units
	12

Coupling head WW 30-D3-1412	
SAP: KUPLNG KUGL WW 30-D3-K1412	
Part no.	1860799 *(W 1142)*
Drawbar Ø	50 – 51 mm
Ball Ø	50 mm
Perm. gross weight	3,000 kg
Nose load	150 kg
D / Dc value	27.0 kN
Material	Malleable cast iron
ECE type approval no.	E1 55R-01 0640
	2.38 kg
	– 400 units
	12

Coupling head WW 30-D3-1414	
SAP: KUPLNG KUGL WW 30-D3-K1414	
Part no.	1860800 *(W 1144)*
Drawbar Ø	50 – 51 mm
Ball Ø	50 mm
Perm. gross weight	3,000 kg
Nose load	150 kg
D / Dc value	27.0 kN
Material	Malleable cast iron
ECE type approval no.	E1 55R-01 0640
	2.38 kg
	– 400 units
	12

Coupling head WW 30-D6	
SAP: KUPLNG KUGL WW 30-D6-K1212	
Part no.	1860802 *(W 1148)*
Drawbar Ø	60 mm
Ball Ø	50 mm
Perm. gross weight	3,000 kg
Nose load	150 kg
D / Dc value	27.0 kN
Material	Malleable cast iron
ECE type approval no.	E1 55R-01 0640
	2.42 kg
	– 400 units
	12

COUPLING HEAD WW 350

for braked trailers up to 3,500 kg



WW 350-RB

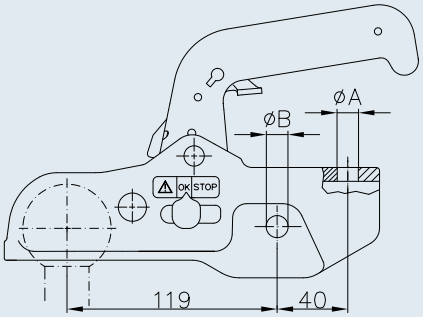

Type	øA	øB
WW 350–RB–1212	12.5	12.5
WW 350–RB–1412	12.5	14.5
WW 350–RB–1414	14.5	14.5
WW 350–RD–1212	12.5	12.5
WW 350–RD–1412	12.5	14.5
WW 350–RD–1414	14.5	14.5

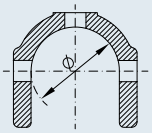

Coupling head WW 350-RB-1212

SAP: KUPLNG KUGL WW 350-RB-K1212	
Part no.	1860803 *(W 1180)*
Drawbar Ø	50 mm
Ball Ø	50 mm
Perm. gross weight	3,500 kg
Nose load	200 kg
D / Dc value	31.0 kN
Material	Malleable cast iron
ECE type approval no.	E1 55R-01 0380
	3.40 kg
	– 400 units
	12

Coupling head WW 350-RB-1412

SAP: KUPLNG KUGL WW 350-RB-K1412	
Part no.	1860804 *(W 1181)*
Drawbar Ø	50 mm
Ball Ø	50 mm
Perm. gross weight	3,500 kg
Nose load	200 kg
D / Dc value	31.0 kN
Material	Malleable cast iron
ECE type approval no.	E1 55R-01 0380
	3.40 kg
	– 400 units
	12

Coupling head WW 350-RB-1414

SAP: KUPLNG KUGL WW 350-RB-K1414	
Part no.	1860805 *(W 1182)*
Drawbar Ø	50 mm
Ball Ø	50 mm
Perm. gross weight	3,500 kg
Nose load	200 kg
D / Dc value	31.0 kN
Material	Malleable cast iron
ECE type approval no.	E1 55R-01 0380
	3.40 kg
	– 400 units
	12

Coupling head WW 350-RD-1212

SAP: KUPLNG KUGL WW 350-RD-K1212	
Part no.	1860806 *(W 1184)*
Drawbar Ø	65 mm
Ball Ø	50 mm
Perm. gross weight	3,500 kg
Nose load	200 kg
D / Dc value	31.0 kN
Material	Malleable cast iron
ECE type approval no.	E1 55R-01 0380
	3.54 kg
	– 400 units
	12

Coupling head WW 350-RD-1412

SAP: KUPLNG KUGL WW 350-RD-K1412	
Part no.	1860807 *(W 1185)*
Drawbar Ø	65 mm
Ball Ø	50 mm
Perm. gross weight	3,500 kg
Nose load	200 kg
D / Dc value	31.0 kN
Material	Malleable cast iron
ECE type approval no.	E1 55R-01 0380
	3.54 kg
	– 400 units
	12

Coupling head WW 350-RD-1414

SAP: KUPLNG KUGL WW 350-RD-K1414	
Part no.	1860808 *(W 1186)*
Drawbar Ø	65 mm
Ball Ø	50 mm
Perm. gross weight	3,500 kg
Nose load	200 kg
D / Dc value	31.0 kN
Material	Malleable cast iron
ECE type approval no.	E1 55R-01 0380
	3.54 kg
	– 400 units
	12

COUPLING HEAD WW 350

for braked trailers up to 3,500 kg



WW 350-RCH

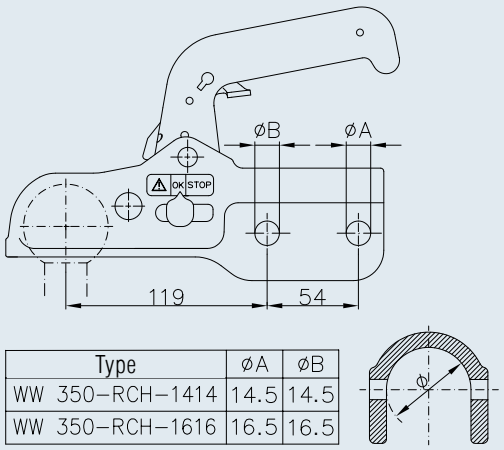

Type	øA	øB
WW 350–RCH–1414	14.5	14.5
WW 350–RCH–1616	16.5	16.5

Coupling head WW 350-RCH-1414

SAP: KUPLNG KUGL WW 350-RC-H1414	
Part no.	1860809 *(W1188)*
Drawbar Ø	60 mm
Ball Ø	50 mm
Perm. gross weight	3,500 kg
Nose load	200 kg
D / Dc value	31.0 kN
Material	Malleable cast iron
ECE type approval no.	E1 55R-01 0380
	3.70 kg
	– 400 units
	12

Coupling head WW 350-RCH-1616

SAP: KUPLNG KUGL WW 350-RC-H1616	
Part no.	1860810 *(W1189)*
Drawbar Ø	60 mm
Ball Ø	50 mm
Perm. gross weight	3,500 kg
Nose load	200 kg
D / Dc value	31.0 kN
Material	Malleable cast iron
ECE type approval no.	E1 55R-01 0380
	3.70 kg
	– 400 units
	12

SPECIAL COUPLING HEAD WW 300

Ball Ø 60 mm, for braked trailers up to 3,500 kg



WW 300-H

Important!
Special coupling head only suitable for Ø 60 mm balls. This coupling head must not be used with standard Ø 50 mm balls.

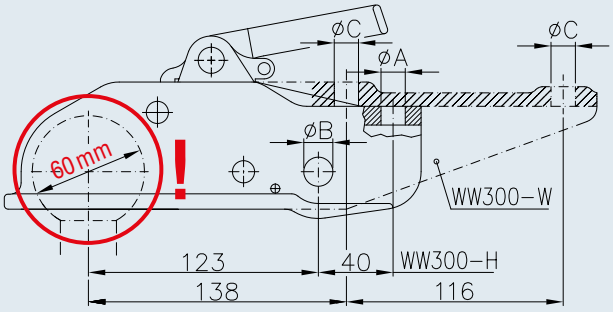

Type	ØA	ØB	ØC
WW 300–H–1212	12.5	12.5	—
WW 300–H–1412	12.5	14.5	—
WW 300–W	—	—	14.5

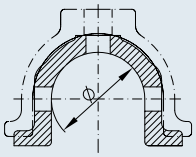

Coupling head WW 300-H-1212-D60 KUGEL

SAP: KUPLNG KUGL WW 300-H-1212-D60 KUG60	
Part no.	1860814 *(W 1410)*
Drawbar Ø	50 mm
Ball Ø	60 mm
Perm. gross weight	3,500 kg
Nose load	150 kg
D / Dc value	31.0 kN
Material	Malleable cast iron
ECE type approval no.	E1 55R-01 1242
	3.48 kg
	300 units 350 units
	12

Coupling head WW 300-H-1412-D60 KUGEL

SAP: KUPLNG KUGL WW 300-H-1412-D60 KUG60	
Part no.	1860815 *(W 1411)*
Drawbar Ø	50 mm
Ball Ø	60 mm
Perm. gross weight	3,500 kg
Nose load	150 kg
D / Dc value	31.0 kN
Material	Malleable cast iron
ECE type approval no.	E1 55R-01 1242
	3.48 kg
	350 units 300 units
	12

Coupling head WW 300-W-D60 KUGEL

SAP: KUPLNG KUGL WW 300-W-D60 KUGEL 60	
Part no.	1860816 *(W 1412)*
Drawbar Ø	70 mm
Ball Ø	60 mm
Perm. gross weight	3,500 kg
Nose load	150 kg
D / Dc value	31.0 kN
Material	Malleable cast iron
ECE type approval no.	E1 55R-01 1242
	3.52 kg
	300 units 350 units
	12

COUPLING HEAD WW 30-K+Z

universal, for braked trailers up to 3,000 kg



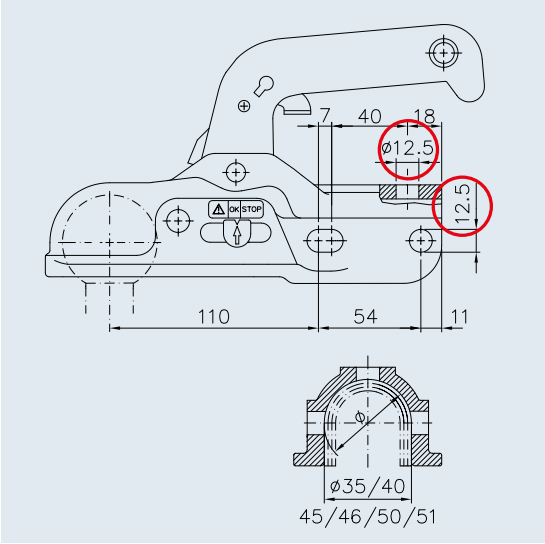

Universal coupling head WW 30-K+Z	
SAP: KUPLNG KUGL WW 30-K+Z	
Part no.	1860801 *(W 1146)*
Drawbar Ø	35-40-45-46-50-51 mm
Ball Ø	50 mm
Perm. gross weight	3,000 kg
Nose load	150 kg
D / Dc value	27.0 kN
Material	Malleable cast iron
ECE type approval no.	E1 55R-01 0640
	3.60 kg
	– 170 units
	12





STABILISER AKS™

for braked trailers from 200 to 3,500 kg

YOUR ADVANTAGE

Safe and relaxed driving with the AKS™





Swaying and pitching movements of the trailer are effectively suppressed with the stabiliser.

Emergency situations

The vehicle combination can be restored to stability faster in an emergency situation with the AKS™. Furthermore, the stabiliser permits a higher theoretical maximum speed (pay attention to permitted maximum speed). The AKS™ 3004/3504 complies with ISO 11555-1 (100 km/h approval possible).



Function

Operating the stabilisation handle presses four special friction pads against the car's coupling head from the left and right as well as the front and rear. The maximum braking torque of the pads can be 320 Nm. Swaying or pitching movements are thus effectively suppressed before they become serious.

Operation

The hitch and stabilisation handles are separate from one another, and each can be operated with one hand. No complicated additional securing devices. The stabilisation handle is simply opened for easier manoeuvring of the trailer.

Function and operation

How to hitch up correctly:



Use the hitch handle to place the AKS™ on the ball (ball must be free from grease and have a bare metal surface). Push the hitch handle down.



Push the stabilisation handle down. The AKS™ is now ready for towing.

The AKS – with even better ergonomics – has been presented with the **Caravaning Design Award** and the **Red Dot Design Award** for its particularly successful design!

CARAVANING DESIGN AWARD 2012/2013
INNOVATIONS FOR NEW MOBILITY
BEST PRACTICE

reddot design award
honourable mention 2011

On request as standard equipment or can be retrofitted to trailers with AL-KO chassis

STABILISER AKS™

for braked trailers from 200 to 3,500 kg

YOUR ADVANTAGE

- **ECE approval – no TÜV registration is therefore necessary**
- **Approved for 100 km/h operation according to ISO 1 1555-1**

SURFACE TREATMENT

Housing: Dacromet-coated
Hitch handle: galvanised
Soft-Dock: Rubber mixture
Stabilisation handle:
Aluminium and Dacromet-coated, grip area additionally with plastic

CHECKING AND MAINTENANCE

- **Safety indicator**



If the green cylinder is visible, the AKS™ is correctly mounted on the ball.

- **Left/right friction pad wear indicator**



Friction linings are still OK.

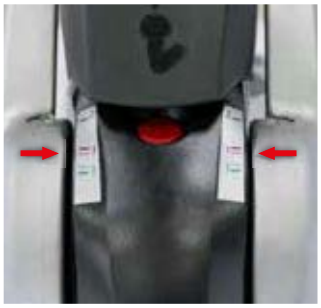

Friction linings are worn.

- **Wear indicator**



Wear indicator for front/rear friction pads and hitch mechanism.

MOUNTING

Before mounting the AKS, check that the preconditions stated here have been met.

Please note: The ball head of the towing hitch must be free from grease and have a bare metal surface (paint must be removed).

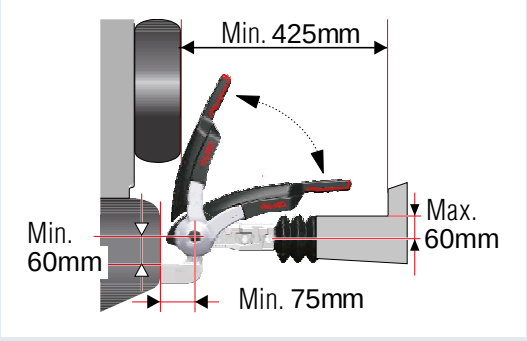

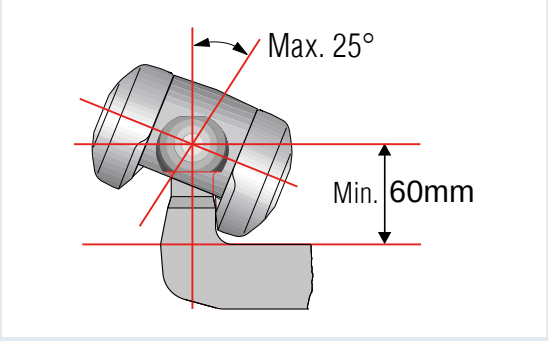

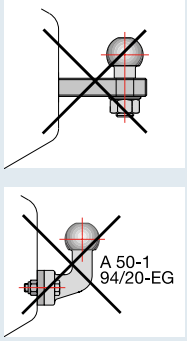

STABILISER AKS™ 3004

for braked trailers from 200 to 3,000 kg



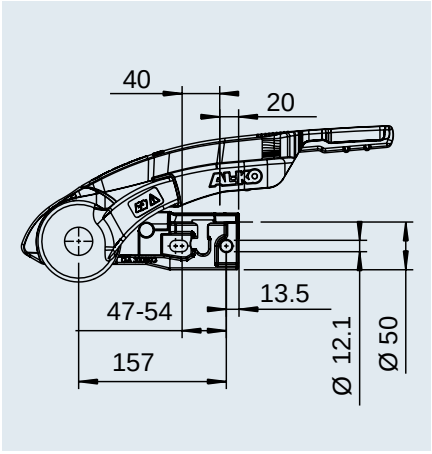



AKS™ 3004	
SAP: AKS3004 VERP GA3000 FL	
Part no.	1 225 158
Perm. gross weight	3,000 kg
Nose load	150 kg
D / Dc value	26.9 kN
Minimum dimensions	200 kg
Tightening torque Strength class 8.8	M12: 75 Nm
ECE type approval no.	E1 55R-01 0930
	4.2 kg
	– 22 units

Safety three-pack AKS™ 3004	
SAP: AKS3004 (3-ER-PACK) SAFETY+BALL COMP	
Part no.	1 225 155
	5.4 kg
	– 22 units

STABILISER AKS™ 3504

for braked trailers from 200 to 3,500 kg



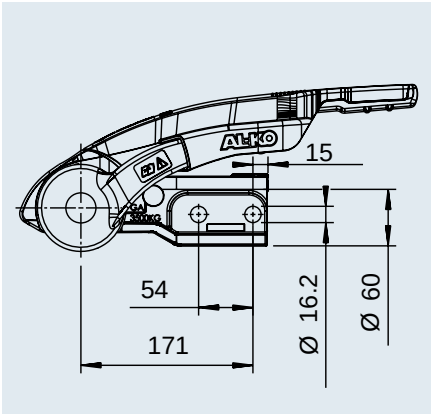



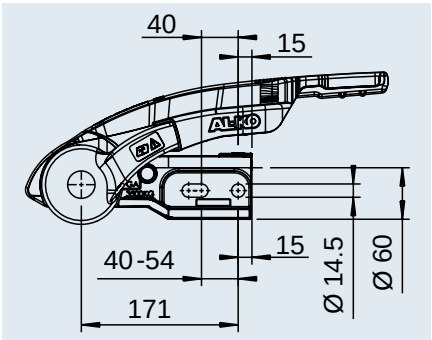

AKS™ 3504 with integrated lock and Safety-Ball	
SAP: AKS3504 VERP GA3500 M SCHLIESSZYL	
Part no.	1 225 761
Perm. gross weight	3,500 kg
Nose load	350 kg
D / Dc value	31.0 kN
Minimum dimensions	200 kg
Tightening torque Strength class 8.8	M16: 195 Nm
ECE type approval no.	E1 55R-01 1796
	5.2 kg
	– 22 units

AKS™ 3504 – cross hole with integrated lock and Safety-Ball	
SAP: AKS3504 VERP GA3500 M14 M SCHLIESSZYL	
Part no.	1 225 763
Tightening torque Strength class 10.9	M14: 175 Nm
	5.2 kg
	– 22 units

COUPLING HEAD WS 3000 / WS 3500

with anti-sway damping, for braked trailers up to 3,500 kg



WS 3000 = 3,000 kg

WS 3500 = 3,500 kg

Specially developed friction elements are pressed axially under high spring pressure against the towball of the car, resulting in the enormous stability of the vehicle combination. This increases by up to 30 % the critical speed at which the car-trailer combination becomes unstable and starts to sway. Extra safety for you! All WS 3000 / WS 3500 couplings fulfil the ISO 11555-1 standard and are therefore approved stabilising devices for the 100 km/h regulation.



Single level system for all functions



Coupling indicator



Wear indicator

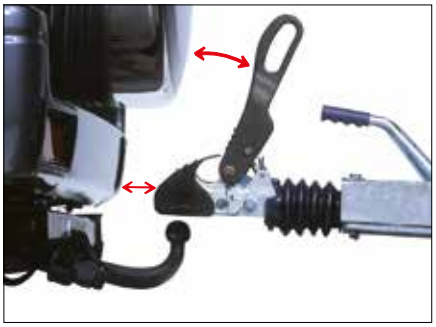

More free space to the rear of the vehicle

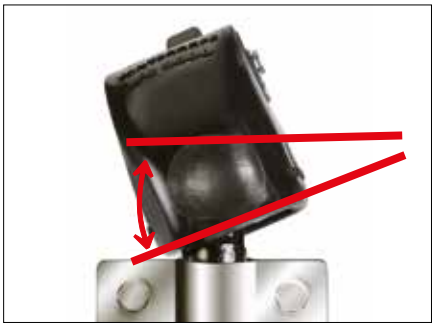

Full ball neck clearance



Maxi soft buffer

COUPLING HEAD WS 3000 / WS 3500

with anti-sway damping, for braked trailers up to 3,500 kg





WS 3000-D+Z



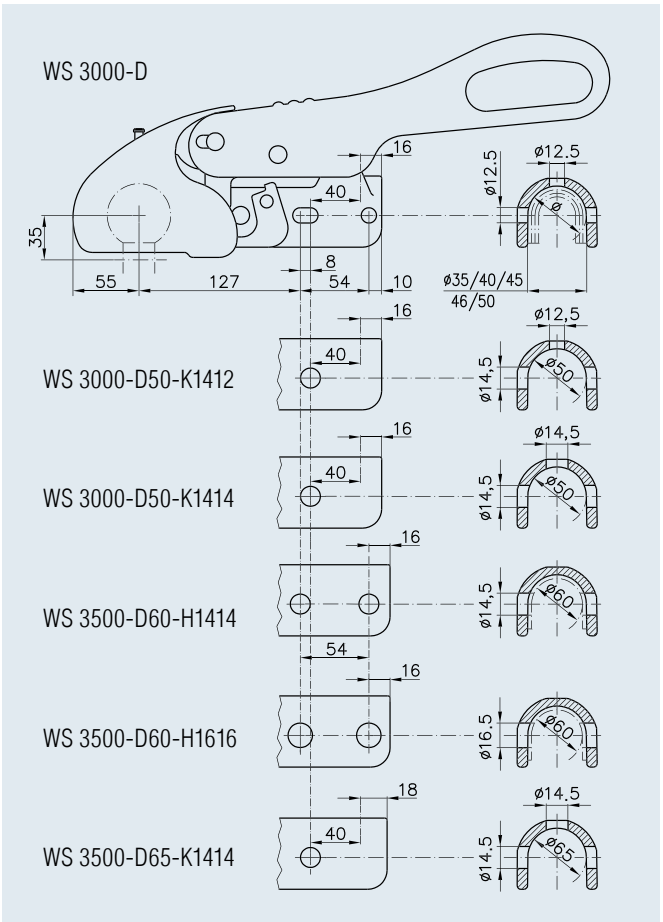

SAP: KUPLNG SCHL WS 3000-
SAP: KUPLNG SCHL WS 3500-

	Part no.	Drawbar diam.	Trailer load	Nose load	Ball Ø	D/Dc value				
WS 3000-D+Z [1]	1860848 *(W1450)*	35-40-45-46-50 mm	3,000 kg	150 kg	50 mm	27.0 kN	5.80 kg	–	60	12
WS 3000-D50-K1412+Z [1]	1860849 *(W1451)*	50 mm	3,000 kg	150 kg	50 mm	27.0 kN	5.80 kg	–	60	12
WS 3000-D50-K1414+Z [1]	1860853 *(W1456)*	50 mm	3,000 kg	150 kg	50 mm	27.0 kN	5.80 kg	–	60	12
WS 3500-D60-H1414+Z [2]	1860856 *(W1460)*	60 mm	3,500 kg	150 kg	50 mm	31.0 kN	6.20 kg	–	60	12
WS 3500-D60-H1616+Z [2]	1860857 *(W1462)*	60 mm	3,500 kg	150 kg	50 mm	31.0 kN	6.20 kg	–	60	12
WS 3500-D65-60-K14+Z [2]	1860859 *(W1464)*	65 mm	3,500 kg	150 kg	50 mm	31.0 kN	6.20 kg	–	60	12

[1] ECE type approval no.: E1 55R-01 0065
[2] ECE type approval no.: E1 55R-01 1941

ACCESSORIES

Accessories for coupling heads WS 3000 / WS 3500





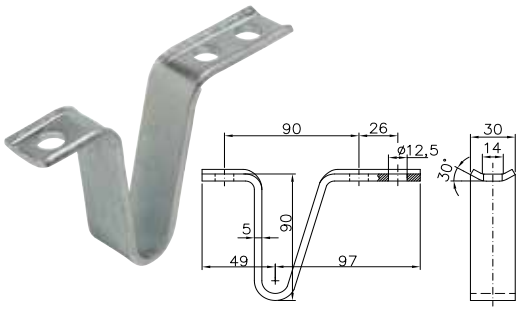







	Part no.	suitable for				
7 – 13-pin plug holder, plastic	1860545 *(W1707)*	WW 8, WW 13, WW 150, WW 220, WW 30	0.02 kg	1,000	–	12
7 – 13-pin plug holder, sheet metal	1860544 *(W1560)*	universally usable	0.04 kg	1,000	–	12
Skid bracket FLA	1860680 *(W1562)*	universally usable	0.30 kg	50	–	12

ACCESSORIES

for coupling heads





Cardboard box is transport packaging and can be used as a sales display after being opened.

Soft-Dock suitable for coupling head AK 7, AK 10/2, AK 252, AK 160, AK 300

SAP: SOFT-DOCK FEUERROT	
Part no. per unit	603 952
	0.3 kg
Part no. per PU 12 units	246 412
	2.5 kg (12 units)
	12 units –





Packing unit

Soft-Dock
suitable for coupling head AK 301/AK 351 PROFI

SAP: SOFT-DOCK RAL 3000 FEUERRROT AK301	
Part no. per unit	691 937
Part no. per PU 20 units	1 223 714
	1.4 kg (20 units)
	20 units –



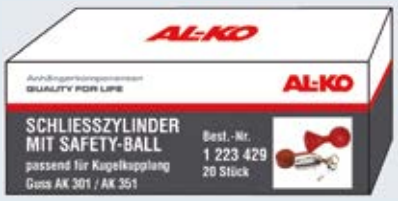

Packing unit

Simultaneous locking anti-theft devices for dealers / hire companies on request!

Plus lock barrel with Safety-Ball
suitable for coupling head AK 301/AK 351 PROFI

SAP: KIT STECKSCHLOSS AK301/AK351	
Part no. per unit	1 222 692
Part no. per PU 20 units	1 223 429
	3.8 kg (20 units)
	20 units –

Plug holder with double use

USE 1

Parking space for 7-pin electric plug

The narrower area of the plug holder provides a positive-locking space for the 7-pin electric plug.



USE 2

Parking space for 13-pin electric plug

The wider area of the plug holder provides a positive-locking space for the 13-pin electric plug.









Plug holder (turning tulip)	
SAP: STECKERHALTER KPL RAL3000	
Part no. units	218 260 00 04
Max. Ø electric plug	13-pin 41.5 mm 7-pin 36.0 mm
	0.07 kg
SAP: AL-KO STECKERHALTER VE 35STCK	
Part no. PU	1 222 699
	2.5 kg
/	35 / –

DRAWBAR EYES FOR OVERRUN DEVICES

Nose load 100 kg

Can be used with:
Overrun devices height-adjustable
Type 101 VB

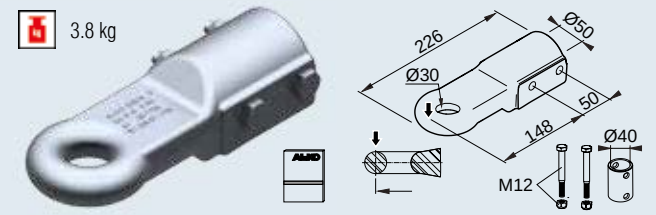

SAP: ZUGÖSE E30 M SCHRAUBMAT VZ

Drawbar eye UK E30/A — **Part no.** 1 224 661

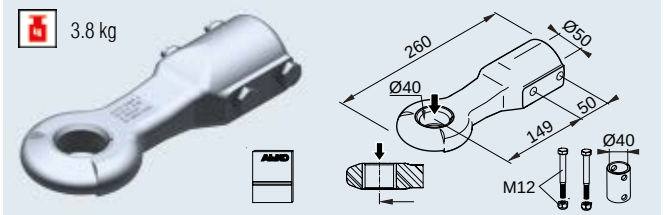

SAP: ZUGÖSE D40 M SCHRAUBMAT VZ

Drawbar eye DIN D40/F — **Part no.** 1 224 660

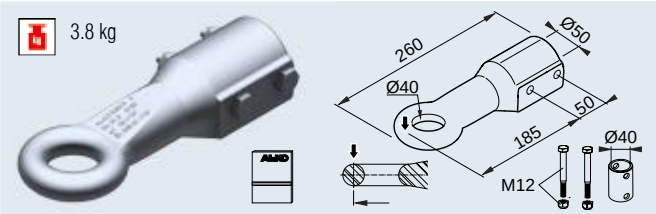

SAP: ZUGÖSE E40 M SCHRAUBMAT VZ

Drawbar eye UK E40/A — **Part no.** 1 224 662

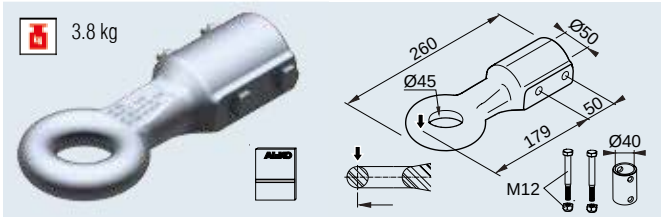

SAP: ZUGÖSE I45 M SCHRAUBMAT VZ

Drawbar eye Italy I45/F — **Part no.** 1 224 663

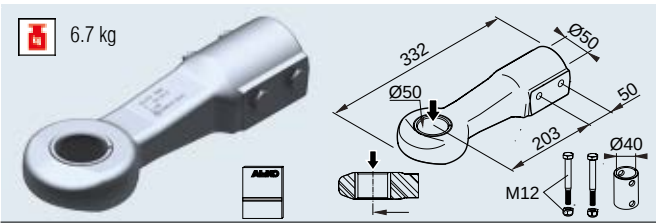

SAP: ZUGÖSE D50 M SCHRAUBMAT VZ

Drawbar eye DIN D50 / D40 — **Part no.** 1 730 611

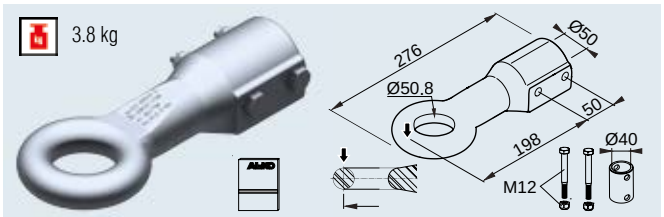

SAP: ZUGÖSE E50 M SCHRAUBMAT VZ

Drawbar eye UK E50/A — **Part no.** 1 224 664

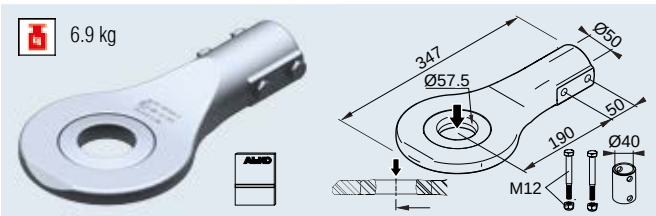

SAP: ZUGÖSE SCHWEDEN M SCHRAUBMAT AUSF A

Drawbar eye Sweden VBG 57.5 — **Part no.** 1 225 125

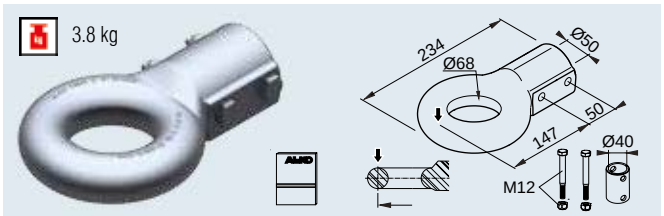

SAP: ZUGÖSE F68 M SCHRAUBMAT VZ

Drawbar eye France F68/E1 — **Part no.** 1 224 665

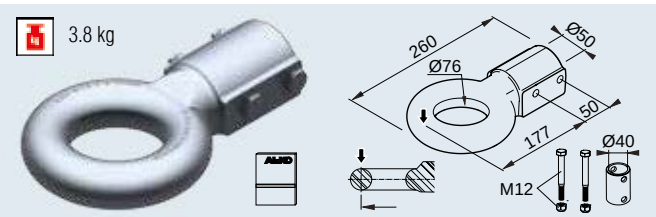

SAP: ZUGÖSE N76 M SCHRAUBMAT VZ

Drawbar eye NATO N76/E — **Part no.** 1 224 666

Important:
The drawbar eyes are only tested and approved for the overrun devices stated in the order overview.
No liability will be accepted for other uses.

DRAWBAR EYES FOR OVERRUN DEVICES

Nose load 120 kg

Can be used with:
Height-adjustable drawbars
Types 70.1 VO, 75 VU, 102 VB, 162 VB

Overrun devices height-adjustable
Types 161 VB, 161 VB-2 OPTIMA, 160 VB BASIC, 251 VB, 251 VB-2 OPTIMA, 270 VB BASIC

Overrun devices V
Type AE 3000
(cast iron version)

3.5 kg

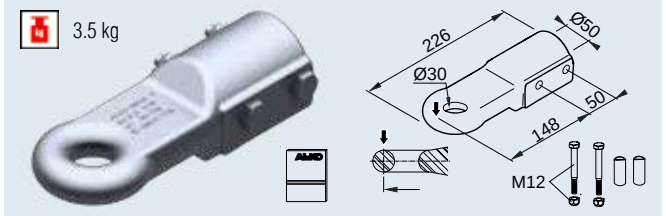

SAP: ZUGÖSE E30 M SCHRAUBMAT VZ

Drawbar eye UK E30/A — **Part no. 1 224 106**

3.8 kg

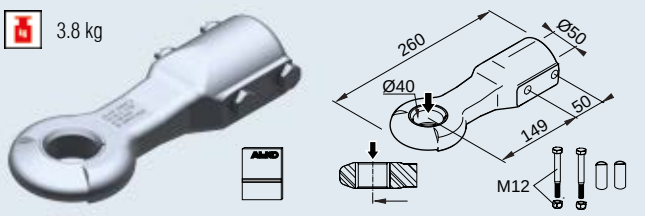

SAP: ZUGÖSE D40 M SCHRAUBMAT VZ

Drawbar eye DIN D40/F — **Part no. 1 213 350**

3.7 kg

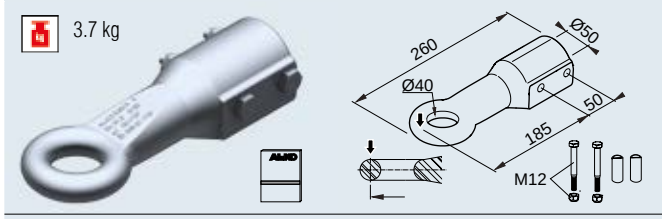

SAP: ZUGÖSE E40 M SCHRAUBMAT VZ

Drawbar eye UK E40/A — **Part no. 1 224 107**

3.8 kg

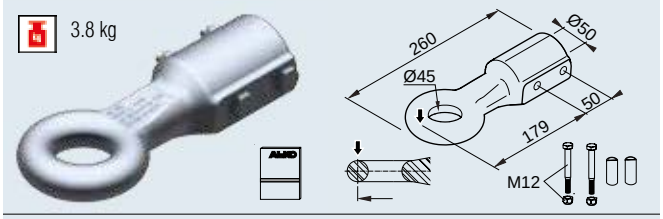

SAP: ZUGÖSE I45 M SCHRAUBMAT VZ

Drawbar eye Italy I45/F — **Part no. 1 224 108**

6.7 kg

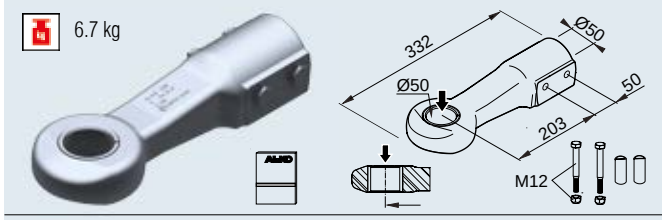

SAP: ZUGÖSE D50 M SCHRAUBMAT VZ

Drawbar eye DIN D50 — **Part no. 1 730 612**

4.3 kg

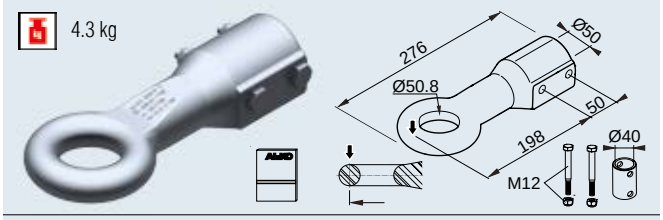

SAP: ZUGÖSE E50 M SCHRAUBMAT VZ

Drawbar eye UK E50/A — **Part no. 1 224 109**

6.6 kg

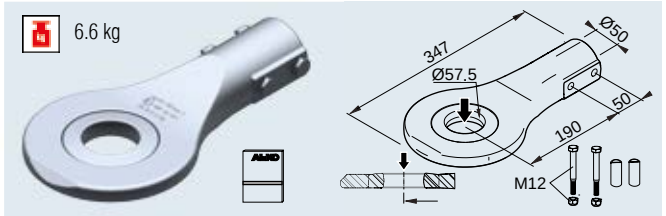

SAP: ZUGÖSE SCHWEDEN M SCHRAUBMAT AUSF A

Drawbar eye Sweden VBG 57.5 — **Part no. 1 225 076**

5.6 kg

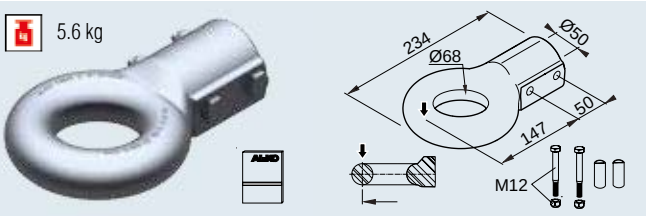

SAP: ZUGÖSE F68 M SCHRAUBMAT VZ

Drawbar eye France F68/E — **Part no. 1 224 110**

6,0 kg

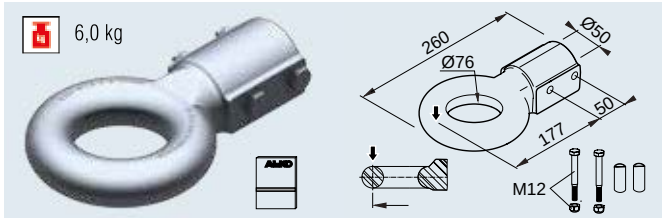

SAP: ZUGÖSE N76 M SCHRAUBMAT VZ

Drawbar eye NATO N76/E — **Part no. 1 224 111**

Important:
The drawbar eyes are only tested and approved for the overrun devices stated in the order overview.
No liability will be accepted for other uses.

DRAWBAR EYES FOR OVERRUN DEVICES

Nose load 350 kg

Can be used with:

Overrun devices height-adjustable	Types 351 VB, 351 VB-2 Optima, 350 VB BASIC
Overrun devices V	Types AE 3500 (cast-iron version), AE 2.8 VB/1-C (steel version)
Overrun devices ☐	Types AE 2.8 VB/1-C (steel version)

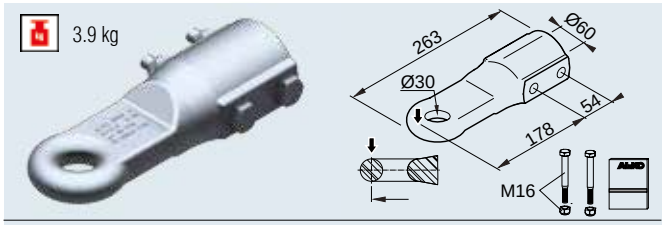

SAP: ZUGÖSE E30 M SCHRAUBMAT VZ

Drawbar eye UK E30/B — **Part no.** 1 224 112

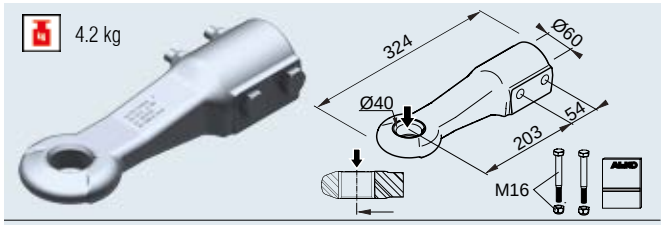

SAP: ZUGÖSE D40 M SCHRAUBMAT VZ

Drawbar eye DIN D40/G — **Part no.** 1 224 114

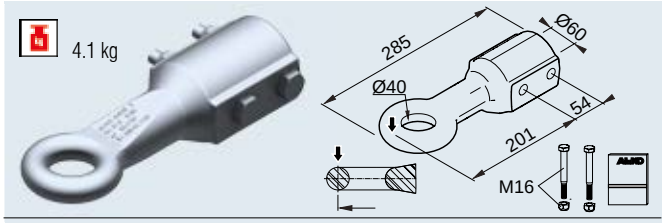

SAP: ZUGÖSE E40 M SCHRAUBMAT VZ

Drawbar eye UK E40/B — **Part no.** 1 224 113

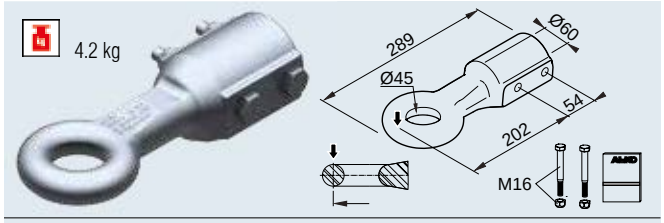

SAP: ZUGÖSE I45 M SCHRAUBMAT VZ

Drawbar eye Italy I45/G — **Part no.** 1 224 115

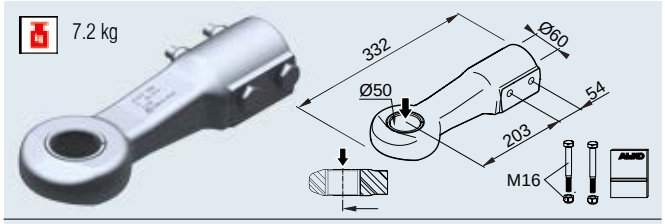

SAP: ZUGÖSE D50 M SCHRAUBMAT VZ

Drawbar eye DIN D50 — **Part no.** 1 730 613

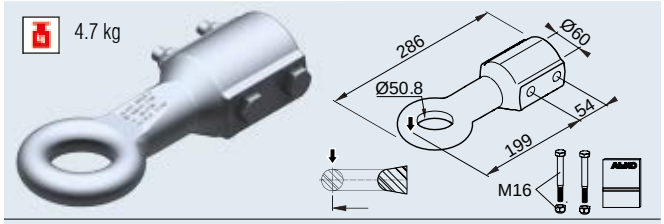

SAP: ZUGÖSE E50 M SCHRAUBMAT VZ

Drawbar eye UK E50/B — **Part no.** 1 224 116

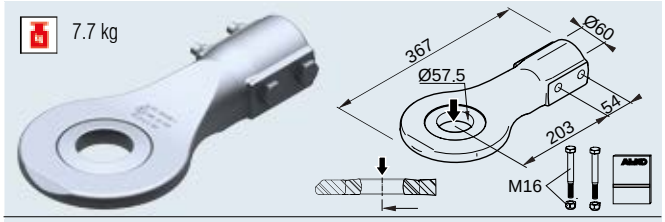

SAP: ZUGÖSE SCHWEDEN M SCHRAUBMAT AUSF B

Drawbar eye Sweden VBG 57.5 — **Part no.** 1 225 077

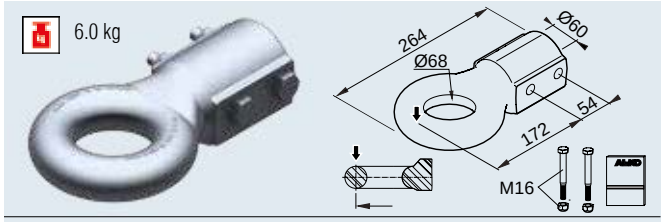

SAP: ZUGÖSE F68 M SCHRAUBMAT VZ

Drawbar eye France F68/F — **Part no.** 1 224 117

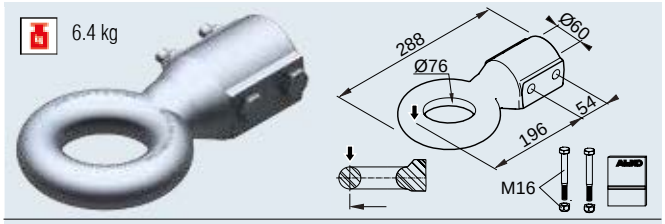

SAP: ZUGÖSE N76 M SCHRAUBMAT VZ

Drawbar eye NATO N76/F — **Part no.** 1 224 118

Important:
The drawbar eyes are only tested and approved for the overrun devices stated in the order overview.
No liability will be accepted for other uses.

7. TOWING HITCHES FOR TOWING VEHICLES



TOWING HITCHES FOR TOWING VEHICLES

AL-KO towballs	388
WINTERHOFF couplings	388
AL-KO / WINTERHOFF accessories	389
BRADLEY towing hitches	390 – 395
Universal hitches from Bradley	396 – 397
Universal hitches from Dixon-Bate	398 – 399
Universal stabilisers from Dixon-Bate	400 – 401
Coupling mouths from Bradley	402
Coupling mouths from Dixon-Bate	403
Bradley AutoJaw	404 – 405
Height-adjustable holders from Dixon-Bate	406 – 407
Pintles from Dixon-Bate	408 – 409
Dixon-Bate Shocklink	410 – 411
Accessories / replacement parts	412

TOWBALL Ø 50

2-hole



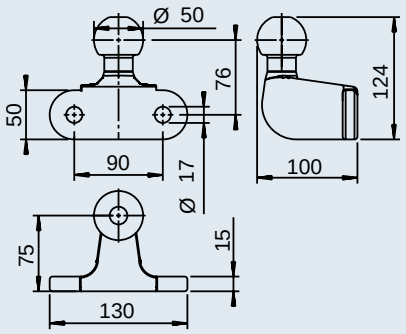

Towball Ø 50 - BC 75 / 200	
SAP: KUPLNGSKUGEL BC75/200	
Part no.	1 275 101
Perm. trailer load	Max. 3,500 kg
Nose load	200 kg
D/Dc value	17.0 kN
ECE type approval no.	E2 55R-01 12208
Range of applications	Off-road vehicles, vans **Important:** Cannot be used in conjunction with an AKS
	2.0 kg
	– –



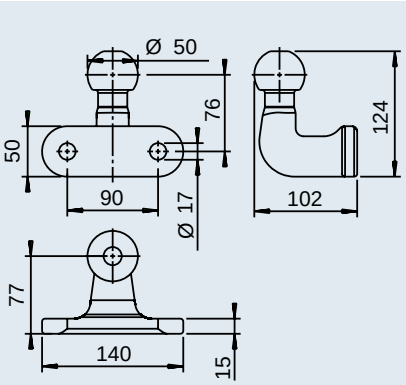

Towball UN 252 D	
SAP: KUPP KUG MIT FLANSCH UN252D ECE-R55	
Part no.	1 202 305
Perm. trailer load	Max. 3,500 kg
Nose load	150 kg
D/Dc value	17.0 kN
ECE type approval no.	E13 55R-01 4042
Range of applications	Off-road vehicles, vans **Important:** Suitable for AKS
	2.0 kg
	– –

WINTERHOFF

COUPLING



KUB 50-2000 KG

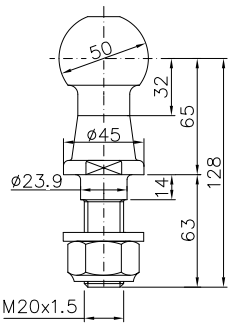



KUB 50-3500 KG

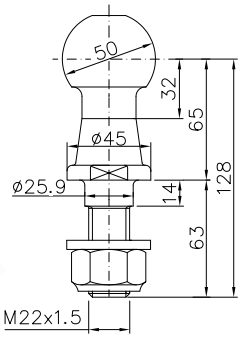

	Part no.	Trailer load	Ball diam.	D/Dc value				
KUB 50-2000 KG [1]	1860520 *(W1610)*	2,000 kg	50 mm	18.5 kN	1.11 kg	1,000	–	12
KUB 50-3500 KG [2]	1860683 *(W1620)*	3,500 kg	50 mm	31.0 kN	1.11 kg	1,000	–	12

[1] ECE R55-No. 55R-011525 E1
[2] ECE R55-No. 55R-010809 E1

ACCESSORIES













Soft-Ball				
SAP:	SOFT-BALL RAL3000 FEUERROT	SOFT-BALL RAL9011-SCHWARZ	SOFT-BALL RAL5002-BLAU	SOFT-BALL RAL9006 ALUMINIUMWEISS
Part no. unit for towing hitch	605 307 with 50 mm ball	1 310 913 with 50 mm ball	1 337 726 with 50 mm ball	1 651 589 with 50 mm ball
Colour	Red, similar to RAL 3000	Black, similar to RAL 9011	Blue, similar to RAL 5002	White aluminium, similar to RAL 9006
	0.055 kg	0.055 kg	0.055 kg	0.055 kg
SAP:	SOFT-BALL FEUERROT VE 24 STÜCK	SOFT-BALL SCHWARZ VE 24 STÜCK	SOFT-BALL BLAU VE 24 STÜCK	SOFT-BALL RAL 9006 VE 24 STÜCK
Part no. PU	247 095 (content 24 units)	1 211 738 (content 24 units)	1 222 223 (content 24 units)	1 225 991 (content 24 units)
	1.6 kg	1.6 kg	1.6 kg	1.6 kg
/	24 / –	24 / –	24 / –	24 / –



8 units in red



8 units in black



8 units in white aluminium

Soft-Ball	
SAP: SOFT-BALL GEMISCHT VE 24 STÜCK	
Part no. PU for towing hitch	1 225 992 (content 24 units) with 50 mm ball
Colours mixed	Red, black, white aluminium
	1.6 kg
/	24 / –

WINTERHOFF

BALL CAP





BALL CAP-K24

24 units per box



	Part no.	suitable for				
BALL CAP	1860484 *(W1640)*	universally usable	0.06 kg	3,000	–	12
BALL CAP-K24	1860685 *(W1641)*	universally usable	1.40 kg	24	–	12

BRADLEY

The leading drawbar and towing hitch brand

The English company Bradley Doublelock is the leading supplier of high-quality and durable drawbars and towing hitches. The products can be used in all areas in which high durability and long service lives are crucial, e.g. in commercial use, in agriculture, on military vehicles and in public utility companies.
The Bradley brand stands for the highest standards of quality and safety, and has been extended by the Dixon-Bate hitch component product range, which has been characterised by its first-class quality for over 90 years.

The Bradley brand has always stood for outstanding designs, extreme durability, excellent longevity and high quality.

- Trailer components: hitches, jockey wheels and stands
- Towing hitches: coupling mouths, holders and pintles
- Coupling accessories: large selection of coupling bolts, lanyards and further accessories for all coupling systems with type approval

The Bradley product portfolio
You benefit from Bradley's long-term development experience, because the extensive towing hitch, chassis component and replacement part product range has been designed for long service lives.



Trailer components



Towing hitches



Coupling accessories

Type approval and safety

All Bradley products comply with the highest standards of quality and safety: they have been tested for suitability, have European type approval, and comply with Directive ECE-R55-01.
The type approval confirms adherence to the minimum standards in terms of legal, technical and safety-related requirements.
You can therefore be sure that a product has been manufactured according to the highest technical quality standards.
Not all towing hitches that are available in Europe have type approval or comply with Directive ECE-R55-01. As a result, these products may be unsuitable for their intended use, and might not be covered by any insurance in the event of damage. We therefore recommend that you seek advice to ensure that your coupling system has type approval. The sales team is available to provide advice, and can support you in selecting suitable products with type approval for your coupling system.

Manufacturer approved and certified according to BS EN ISO 9001:2000 and ISO 14001.

THE BRADLEY BRAND

Prize-winning quality and safety for over 90 years



Bradley Doublelock was founded as "H&K Bradley" in 1948, and quickly made a name for itself as a towing hitch manufacturer.
Since its foundation, the company has been committed to quality and innovation. Generations of customers have appreciated the high-quality design and high technical standard of all Bradley products, quickly establishing Bradley as the benchmark for towing hitches on the British market.

Bradley Doublelock is still focussed on quality and product innovation to date. This is the reason why the products are so successful. Present customers include both companies and public clients as well as end customers who trust in the high added value and reliability of Bradley products.

Dixon-Bate has been the market leader for coupling mouths and towing hitches for a long time, and enjoys an outstanding reputation for its high-quality premium products with their extraordinarily durable design.

Since taking over Dixon-Bate in 2009, these products have been rounding off Bradley's range. Dixon-Bate's products have stood for unsurpassed quality, extreme resilience and extreme longevity for over 90 years.
The entire Bradley and Dixon-Bate product range meets the highest quality standards and stringent safety requirements that are specified in the military sector. Bradley and Dixon-Bate are even making these demanding specifications the standard in the automotive industry, in shipping, in agriculture and in the leisure sector.

Bradley – a brand "Made in England"

Bradley's headquarters are located in the English county of West Yorkshire, which is renowned for its engineering skills. Many of the highest-quality technical products from Great Britain are produced in this region. There is a long tradition of developing and designing technical products there. Bradley combines this long-term experience with the advantages of cutting-edge production methods and robust designs that meet the most demanding of requirements.

Bradley has a sales office in Athlone (Co. Westmeath), Ireland. Customers from Ireland and Northern Ireland are therefore supported directly by the office in Athlone. Bradley operates a local warehouse so that components for trailers and towing vehicles can be shipped immediately.

Bradley brand products can be purchased from 86 dealers located in all regions throughout Great Britain and Ireland. Export markets can also be served and products shipped thanks to the proximity to the ports in Liverpool and Hull.

86
DEALERS

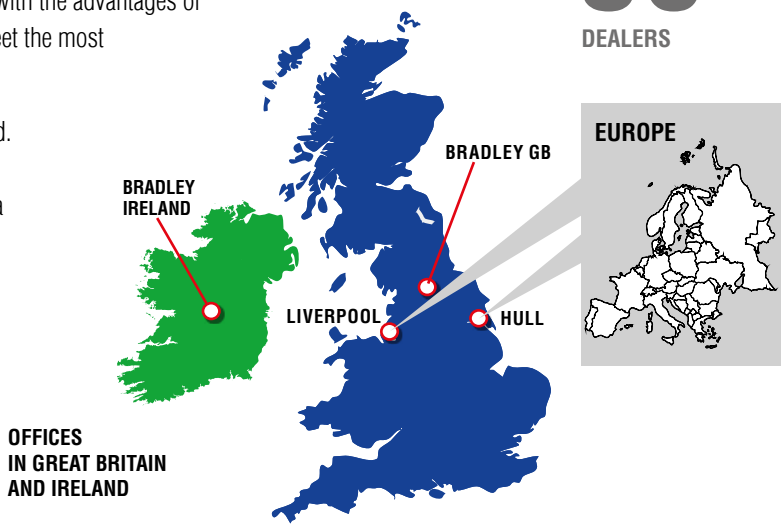

COUPLING SYSTEMS

with type approval from Bradley

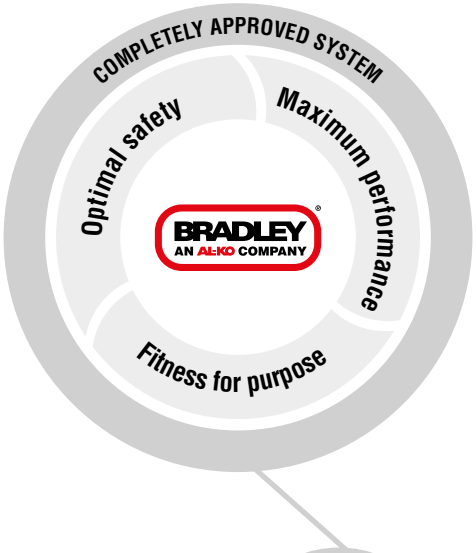

WHY SHOULD COUPLING SYSTEMS WITH TYPE APPROVAL BE USED?

All coupling systems that you use for your vehicle in Great Britain and Europe must have type approval.
A "coupling system" consists of various drawbar components, each of which requires type approval for safe trailer operation. Only this enables you to ensure that a coupling system comprising various drawbar components is fully approved.

All Bradley products have type approval, thus guaranteeing optimal safety and maximum performance for diverse commercial uses and leisure applications.

EXAMPLE:
an approved coupling bolt and an approved lanyard are always required for a coupling mouth to comply with all statutory regulations in Great Britain.

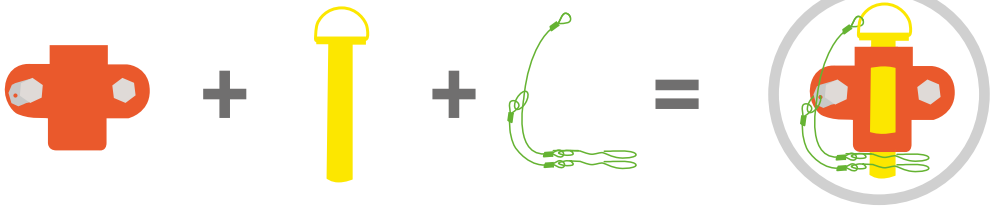

Coupling mouth from Bradley with type approval

Coupling bolts from Bradley with type approval

Lanyard from Bradley with type approval

COMPLETELY APPROVED SYSTEM







Optimal safety
The towing hitches from Bradley meet the highest standards of safety and offer 100% reliability for coupling systems as well as maximum safety for the driver and the transported goods.

Maximum performance
Bradley has been the number 1 for towing hitches in Great Britain for over 90 years. Thanks to this long-term experience and expertise, Bradley's products stand out in each application area.

Fitness for purpose
The approved Bradley products are subjected to stringent tests and meet the highest of quality standards. They are therefore perfectly suitable for each intended application area.

Bradley towing hitches with type approval


UNIVERSAL HITCHES


STABILISERS


COUPLING MOUTHS


HEIGHT-ADJUSTABLE HOLDERS


PINTLES


SHOCKLINK


AUTOJAW

DIRECTIVE ECE-R55-01

Directive for products with type approval

Type approval 94/20/EC for towing hitches was replaced by Directive ECE-R55-01 on 1st November 2014. Since November 2014, all towing hitches and coupling systems must therefore meet the additional requirements of this directive.
Bradley was the first supplier in Great Britain whose products were tested according to is new directive and meet the statutory specifications. All products from Bradley are therefore fully approved and comply with the latest standards.
The directives for various coupling systems are complex and not easy to understand, which is why we recommend only using fully approved products from Bradley when seeking approval for your coupling system.

Service life tested over 2 million cycles
All products from Bradley are subjected to stringent tests so that they meet and surpass the type approval requirements.
These tests also include a service life test consisting of 2 million cycles. You can rely on the fact that all Bradley coupling systems meet the highest standards of quality and safety.

2-year warranty
All Bradley products come with a 2-year warranty for defects as of the date of purchase.

Delivery time 14 working days

7

CHOOSING THE RIGHT TOWING HITCH

Trailer load
The Bradley towing hitches are designed for various train weights, which are indicated using symbols in this brochure. To ensure a safe and approved product, a product with the correct train weight must be selected for your coupling system.

Mounting with two or four bolts
All hitch components from Bradley are pre-drilled for mounting on drawbars using two or four bolts.
The number of bolts is indicated with these symbols. Both mounting types comply with the British standards and Directive ECE-R55-01.

Check list for type approval
Check the following to select the right towing hitch with type approval:

- ✓ Check whether the products comply with Directive ECE-R55-01 (from 1st November 2014).
- ✓ Make sure that the train weight and fastenings are suitable for your coupling system.
- ✓ Check whether each towing hitch component has type approval. (Do not, for example, combine a coupling bolt without type approval and an approved coupling mouth).

QUALITY AND SAFETY STANDARDS

Throughout the entire production process, Bradley is committed to meeting the highest standards of quality and safety.
Thanks to cutting-edge 3D CAD workstations, ultra-precise production and our long-term experience and expertise in development and manufacturing, Bradley is the leading supplier of towing hitches in Great Britain.
All towing hitches from Bradley comply with (and actually surpass) the specified statutory requirements in Great Britain. The products' service life is additionally tested over 2 million cycles. The products come with a 2-year warranty.



Experienced design engineers use the latest 3D CAD programs to plan, develop and test new prototypes.



Investments in modern production systems, CNC machines and laser cutting systems ensure that Bradley products are always manufactured according to the latest technology.

EXPLANATION OF THE S VALUES

The technically correct term for the nose load is the "S value" or "static vertical mass".

The S value is the load, weight or mass that is transferred via the trailer's or caravan's coupling head onto the towball/drawbar fastened to the towing vehicle.

Before buying a towing hitch, you must know or calculate the S value to ensure that your vehicle combination (i.e. towing vehicle and trailer) complies with the safety regulations of the specified statutory requirements.

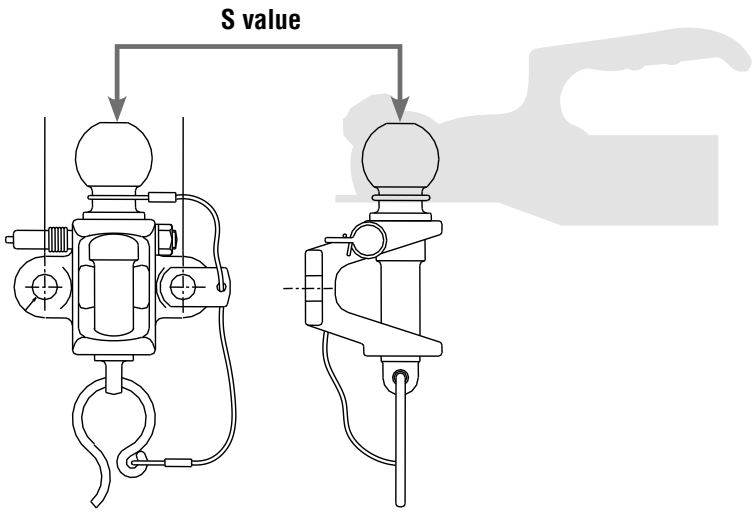

How high is the maximum S value?

The maximum S value or the nose load can be found in the vehicle owner's manual.

The vehicle owner's manual may possibly use a different technical term such as "maximum static vertical load on the towball" or a different description for the S value.

If you do not know the S value for your vehicle, contact your vehicle manufacturer to find out the maximum S value for your vehicle.

AL-KO Premium jockey wheel (part no. 1221695)

Note: devices containing a measuring device for determining the nose load are available; this can e.g. be integrated in the jockey wheel.

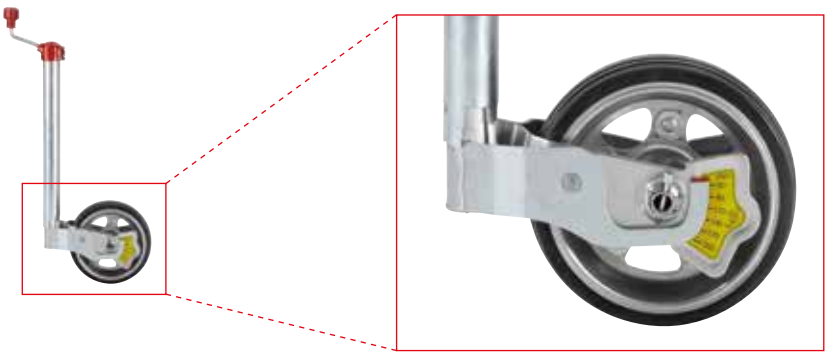

EXPLANATION OF THE D VALUES

The D value is specified in kilonewtons (kN), and indicates the dynamic load limits between the towing vehicle and a trailer, i.e. the horizontal force between the towing vehicle and trailer.
Before buying a towing hitch, you must know or calculate the D value so that your overall coupling system retains its approval.

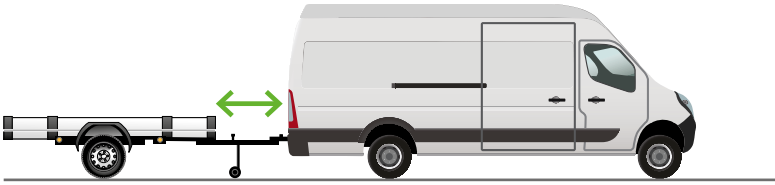

D VALUE
30.95 kN

All of our products' D values are clearly indicated in this catalogue.

Calculating the D value

To calculate the D value, you require the following information from your vehicle manufacturer:

- The permissible gross weight of the towing vehicle (GVW), which may also be called the "officially permissible gross weight"
- The permissible gross weight of the trailer (GTW)

Permissible gross weight of the towing vehicle (GVW)

Permissible gross weight of the trailer (GTW)

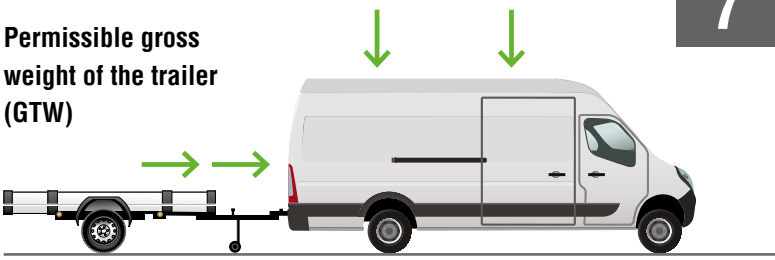

The D value is calculated as follows:

$$\frac{GVW \times GTW}{GVW + GTW} \times \frac{9.81\ kg/ms^2}{1{,}000} = D$$

Example: Ford Transit (GVW = 2,500 kg, GTW = 3,500 kg):

$$\frac{2{,}500\ kg \times 3{,}500\ kg}{2{,}500\ kg + 3{,}500\ kg} \times \frac{9.81\ kg/ms^2}{1{,}000} = \mathbf{14.3\ kN}$$

Criteria for an optimal and safe towing hitch

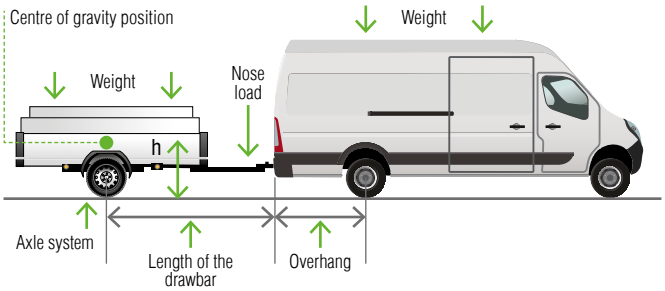

Vehicle

1. High weight
2. Long wheelbase
3. Small overhang
4. Correct tyre pressure
5. Correctly functioning shock absorbers

Trailer

1. Low weight
2. Long drawbar
3. Low centre of gravity
4. Use of the max. permissible nose load
5. Large tyres
6. Optimum loading (heavy items close to the axle)

UNIVERSAL HITCHES

from Bradley

Tested: 2 million cycles

2-year warranty

The universal hitches from Bradley are perfect for mixed trailer fleets, and meet the highest safety requirements.

The universal Bradley hitches consist of a forged towball of robust design and a bolt. The stainless steel lanyard with nylon sheath offers improved cable securing and fixing, and prevents it from catching. The variants for fastening with 2 and 4 bolts are both equipped with a unique primary locking lever and a secondary locking pin to guarantee safe trailer operation.

FEATURES AND ADVANTAGES

- Jam protection and minimal overhang
- Compatible with standard British drawbar eyes 30/40/50 mm
- Doublelock mechanism
- Durable cast iron design with high corrosion resistance
- All hitches meet the requirements of Directive ECE-R55-01

Universal 3.5 t hitch E40TC

3.5 t | 2 | D VALUE 17 kN



- Bolt diameter: 25 mm
- Ball diameter: 50 mm
- Trailer load: 3.5 t
- D value: 17 kN
- Vertical load/S value: 200 kg
- Drawbar eye: min. internal diam. 30 mm
- 2-bolt mounting as per Directive ECE-R55-01

Bolts not included in scope of delivery – M16 bolts required.
Strength class 8.8 or higher required.

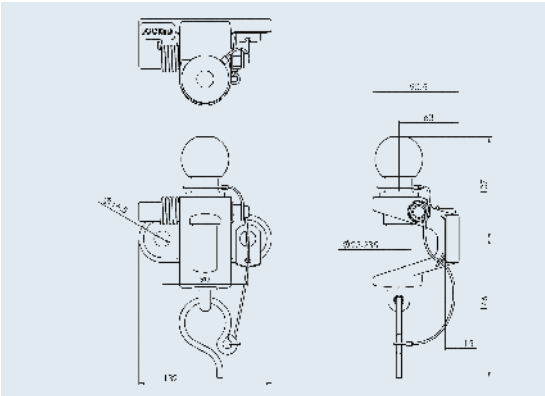

Part no.	Product
185007815 *(Bradley V352L)* **SAP:** ABSCHLEPPKUPPLUNG E40T 3500 KG	Universal 3.5 t hitch E40TC
Replacement part no.	
185012615 *(Bradley Kit173)* **SAP:** VERRIEGELUNGSGRIFF E40TC & E100TC	Locking handle
185005515 *(Bradley Kit172)* **SAP:** 25MM KUGELKOPF + SEIL + SPLINT E100TC	Ball pin & wire
185007915 *(Bradley V35B)* **SAP:** SCHRAUBEN SATZ E40T/TC	Bolt set (unit: inches)
185008015 *(Bradley V35B-M16)* **SAP:** SCHRAUBEN SATZ E40T/TC - M16	Bolt set (metric)

Universal 3.5 t hitch E100TC

3.5 t | 4 | D VALUE 30.95 kN



- Bolt diameter: 32 mm
- Ball diameter: 50 mm
- Trailer load: 3.5 t
- D value: 30.95 kN
- Vertical load/S value: 350 kg
- Drawbar eye: min. internal diam. 30 mm
- 4-bolt mounting as per Directive ECE-R55-01

Bolts not included in scope of delivery – M16 bolts required.
Strength class 8.8 or higher required.

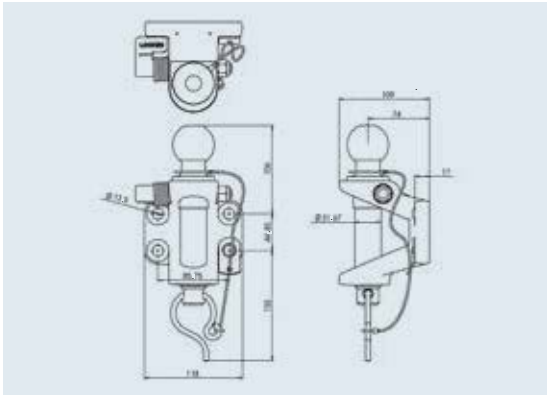

Part no.	Product
185008115 *(Bradley V502L)* **SAP:** ABSCHLEPPKUPPLUNG E100T 5000 KG	Universal 3.5 t hitch E100TC
Replacement part no.	
185012615 *(Bradley Kit173)* **SAP:** VERRIEGELUNGSGRIFF E40TC & E100TC	Locking handle
185012715 *(Bradley Kit170)* **SAP:** 32MM KUGELKOPF + SEIL + SPLINT E100TC	Ball pin & wire
185008215 *(Bradley V50B)* **SAP:** SCHRAUBEN SATZ E100T/TC	Bolt set (unit: inches)
185008315 *(Bradley V50B-M12)* **SAP:** SCHRAUBEN SATZ E100T/TC METRISCH	Bolt set (metric)





System with type approval

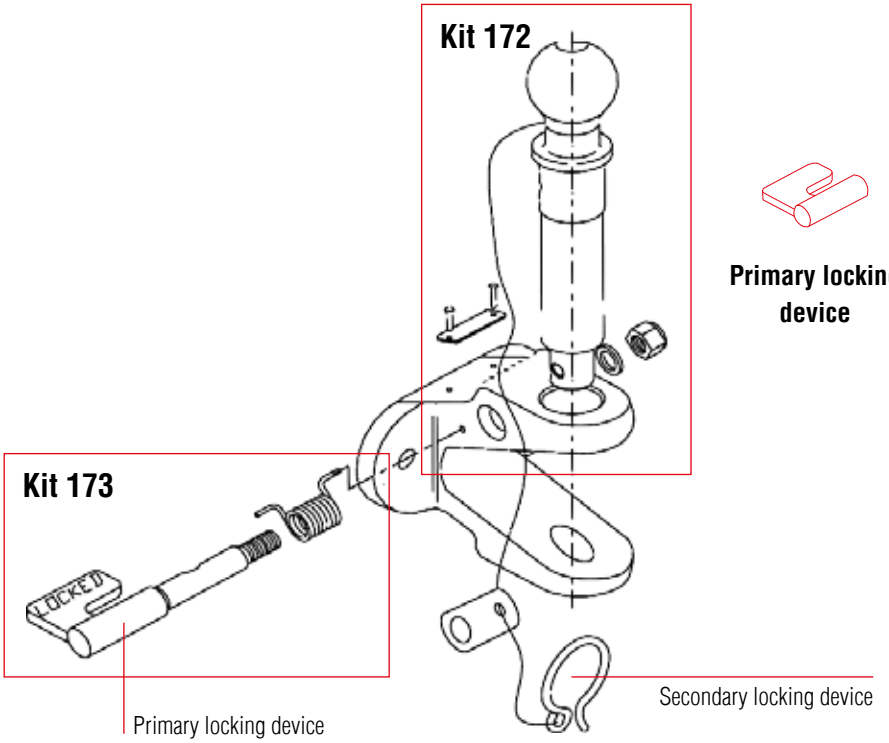





Adapter plate
Part no. 185013915 *(Bradley 17898)*

With this adapter plate, you can attach a European towball with 4 holes to a standard British fastening with 2 bolts (see illustration).

The adapter plate is approved as per Directive ECE-R55-01 for use with Bradley/Dixon-Bate components. The adapter plate is exclusively included in the scope of delivery of components for 2-bolt mounting. (In black only.)

NOTE: use only genuine parts and accessories from Bradley so that your system meets all legally specified requirements and can be approved.

UNIVERSAL HITCHES

from Dixon-Bate

Tested: 2 million cycles

2-year warranty

All universal hitches from Dixon-Bate meet the highest requirements in terms of quality and longevity. They are therefore outstandingly suitable for commercial purposes. End customers can also fasten these hitches to their towing vehicles quickly.

The universal hitches consist of a separate 50 mm towball and a coupling bolt with a diameter of 25 mm. Manufactured from durable forged steel, the towball/bolt assembly has been one of the most popular products amongst commercial users for the past 20 years. The universal hitches from Dixon-Bate are available with or without a hardened coupling bolt.

FEATURES AND ADVANTAGES

- Unique hitch with towball and coupling bolt
- All hitches meet the requirements of Directive ECE-R55-01
- Galvanised as well as transparent passivated surface
- Class: A50-X/S

Universal 3.5 t hitch with 25mm bolt

3.5 t | 2 | D VALUE 17.2 kN



- Bolt diameter: 25 mm
- Ball diameter: 50 mm
- Trailer load: 3.5 t
- D value: 17.2 kN
- Vertical load/S value: 250 kg
- Drawbar eye: min. internal diam. 28,6 mm
  Maximum cross-section: 28.6 mm
- 2-bolt mounting as per Directive ECE-R55-01

Bolts not included in scope of delivery.
Strength class 8.8 or higher required.

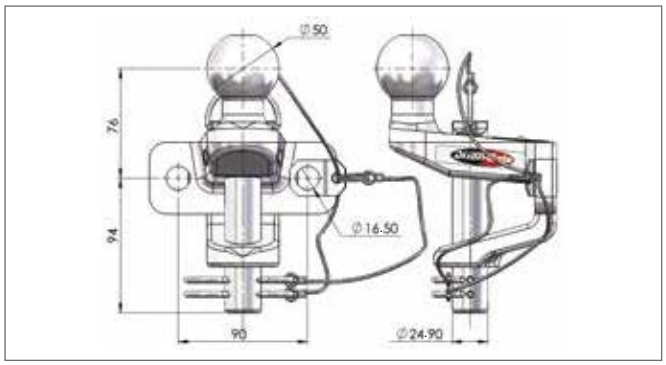

Part no.	Product
185002015 *(Bradley DB202014)* **SAP:** BALL & PIN 3500KG DIXON BATE	Universal 3.5 t hitch with 25 mm bolt
185009815 *(Bradley DB201740)* **SAP:** COUPLING 3.5T UNIV HARDPIN DB	Universal 3.5 t hitch with hardened 25 mm bolt (designed for 3,500 kg)

Universal 3.5 t hitch with hardened 25 mm bolt

3.5 t | 2 | D VALUE 17.2 kN



- Bolt diameter: 25 mm
- Ball diameter: 50 mm
- Trailer load: 3.5 t
- D value: 17.2 kN
- Vertical load/S value: 250 kg
- Drawbar eye: min. internal diam. 28,6 mm
  Maximum cross-section: 28.6 mm
- 2-bolt mounting as per Directive ECE-R55-01

Bolts not included in scope of delivery.
Strength class 8.8 or higher required.

Replacement part no.	Product
185012815 *(Bradley DB68121)* **SAP:** 25 MM BOLZEN 3500KG + SICHERUNGSSET	25 mm standard bolt/ lanyard/strap/split pin
185012915 *(Bradley DB68129)* **SAP:** KETTE/LASCHE/SPLINT 3500KG	Lanyard/strap/split pin for 25 mm bolt (standard head and hardened bolt)
185013015 *(Bradley DB67229)* **SAP:** 25MM BOLZEN GEHÄRTET + SICHERUNGSSET	Hardened 25 mm bolt/ lanyard/strap/split pin





Universal 3.5 t hitch with 32 mm bolt

3.5 t | 4 | D VALUE 30.95 kN

- Bolt diameter: 32 mm
- Ball diameter: 50 mm
- Trailer load: 3.5 t
- D value: 30.95 kN
- Vertical load/S value: 250 kg
- Drawbar eye: min. internal diam. 50 mm
  Maximum cross-section: 28.6 mm
- 4-bolt mounting as per Directive ECE-R55-01

Bolts not included in scope of delivery.
Strength class 8.8 or higher required.



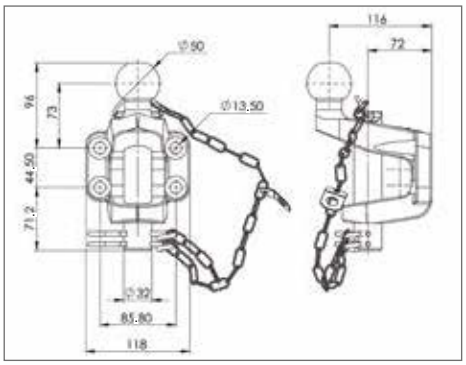

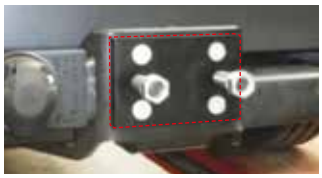

Adapter plate
Part no. 185013915 *(Bradley 17898)*
SAP: ADAPTER PLATE - 4 BOLT EURO TO 2 BOLT UK

With this adapter plate, you can attach a European towball with 4 holes to a standard British fastening with 2 bolts (see illustration).
The adapter plate is approved as per Directive ECE-R55-01 for use with Bradley/Dixon-Bate components. The adapter plate is exclusively included in the scope of delivery of components for 2-bolt mounting (on this page). (In black only.)

Part no.	Product
185008715 *(Bradley DB201691)* **SAP:** TOWING JAW / BALL 3.5T - DIXON BATE	Universal 3.5 t hitch with 32 mm bolt

Replacement part no.	Product
185013115 *(Bradley DB67187)* **SAP:** 32MM BOLZEN 5000KG + SICHERUNGSSET	32 mm bolt/chain/strap/split pin
185013215 *(Bradley DB67221)* **SAP:** KETTE/LASCHE/SPLINT 5000KG	Chain/strap/split pin set for 32 mm bolt

NOTE: use only genuine parts and accessories from Bradley so that your system meets all legally specified requirements and can be approved.

UNIVERSAL STABILISERS

from Dixon-Bate

Tested: 2 million cycles

2-year warranty

The universal stabiliser is compatible with many stabilisation devices. With its forged steel components, it is designed for high load capacity and maximum longevity.
The hitch consists of a 50 mm towball and a hardened coupling bolt with a diameter of 25 mm in order to offer increased flexibility for various stabilisation devices and coupling devices. The components are manufactured from durable, forged steel.
The coupling bolt can be stored in the integrated bolt holder. The stainless steel lanyard with nylon sheath offers improved cable securing and fixing, and prevents it from catching.

FEATURES AND ADVANTAGES

- Unique product designed specifically for stabilisation devices
- All hitches meet the requirements of the EU standard and Directive ECE-R55-01
- Galvanised as well as transparent passivated surface
- Class: A50-X/S

Universal 3.5 t stabiliser with hardened bolt

3.5 t | 2 | D VALUE 17.2 kN



- Bolt diameter: 25 mm
- Ball diameter: 50 mm
- Trailer load: 3.5 t
- D value: 17.2 kN
- Vertical load/S value: 250 kg
- Drawbar eye: min. internal diam. 28,6 mm
  Maximum cross-section: 28.6 mm
- 2-bolt mounting as per Directive ECE-R55-01

Bolts not included in scope of delivery.
Strength class 8.8 or higher required.

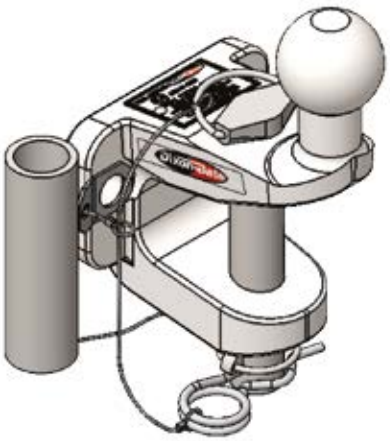

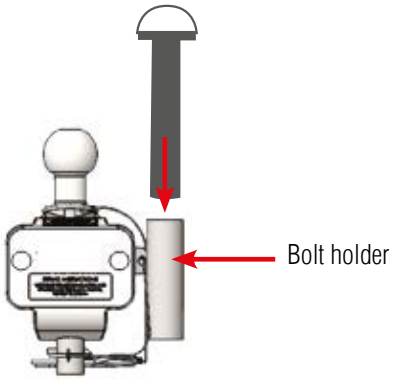

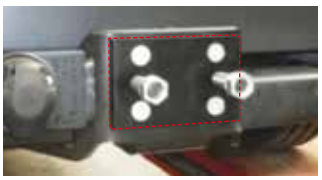

Adapter plate
Part no. 185013915 *(Bradley 17898)*
SAP: ADAPTER PLATE - 4 BOLT EURO TO 2 BOLT UK

With this adapter plate, you can attach a European towball with 4 holes to a standard British fastening with 2 bolts (see illustration).
The adapter plate is approved as per Directive ECE-R55-01 for use with Bradley/Dixon-Bate components. The adapter plate is exclusively included in the scope of delivery of components for 2-bolt mounting (on this page). (In black only.)

Part no.	Product
185010015 *(Bradley DB202116)* **SAP:** KUPPLUNG 3,5T UNIVERSAL	Universal 3.5 t stabiliser with hardened 25 mm bolt (designed for 3.500 kg)

Replacement part no.	Product
185013315 *(Bradley DB68240)* **SAP:** 25MM BOLZEN GEHÄRTET + HALTER	Hardened 25 mm bolt and holder for universal 3.5 t stabiliser

NOTE: use only genuine parts and accessories from Bradley so that your system meets all legally specified requirements and can be approved.





Developed specifically for use with stabilisation devices

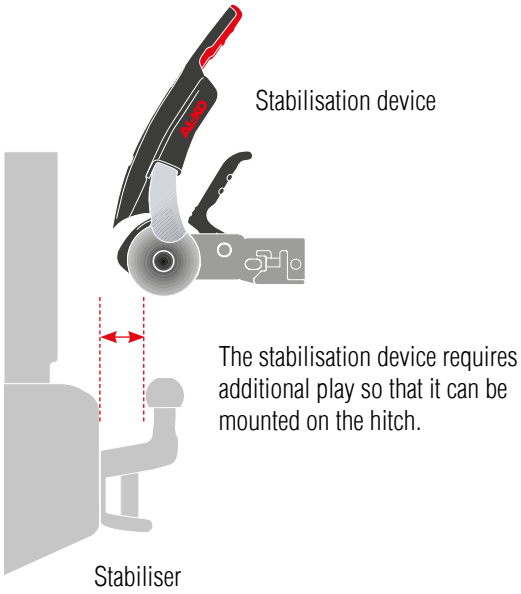

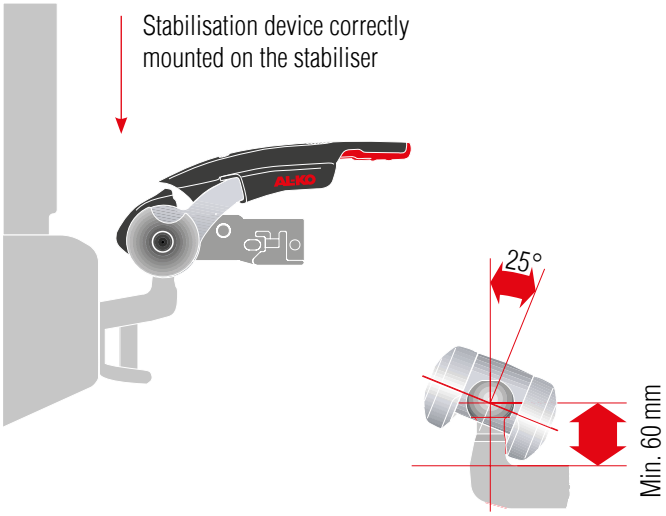

The illustration shows the AL-KO AKS™ 3004 stabiliser.





COUPLING MOUTHS

from Bradley

Tested: 2 million cycles

2-year warranty

The coupling mouths from Bradley have been designed with a jam protection system to prevent blocking. They only have a minimum overhang. They are manufactured from durable, corrosion resistant cast iron, and are approved as per Directive ECE-R55-01.

All coupling mouths have a 2-year warranty and a service life tested over 2 million cycles.

FEATURES AND ADVANTAGES

- Jam protection and minimal overhang
- Compatible with standard British drawbar eyes 30/40/50 mm
- Doublelock mechanism
- Durable cast iron design with high corrosion resistance
- Approved as per Directive ECE-R55-01

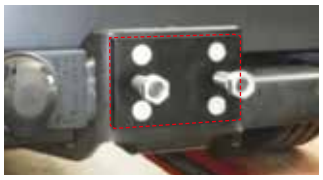

Adapter plate

See accessories for information

Part no. 185013915 *(Bradley 17898)*

SAP: ADAPTER PLATE - 4 BOLT EURO TO 2 BOLT UK

3.5 t coupling mouth E40T

3.5 t | 2 | D VALUE 17 kN



- Bolt diameter: 25 mm
- Trailer load: 3.5 t
- D value: 17 kN
- Vertical load/S value: 200 kg
- Drawbar eye: min. internal diam. 30 mm
  Maximum cross-section: 28.6 mm
- 2-bolt mounting as per Directive ECE-R55-01

Bolts not included in scope of delivery.
M16 bolts required.

3.5 t coupling mouth E100T

3.5 t | 4 | D VALUE 30.95 kN



- Bolt diameter: 32 mm
- Trailer load: 3.5 t
- D value: 30.95 kN
- Vertical load/S value: 350 kg
- Drawbar eye: min. internal diam. 40 mm
  Maximum cross-section: 28.6 mm
- 4-bolt mounting as per Directive ECE-R55-01

Bolts not included in scope of delivery.
M12 bolts required.

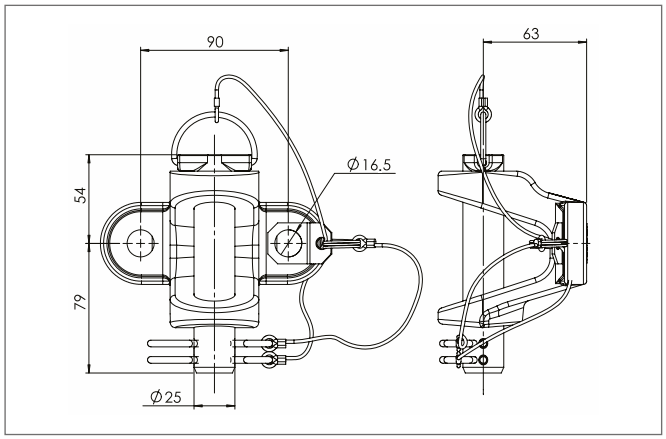

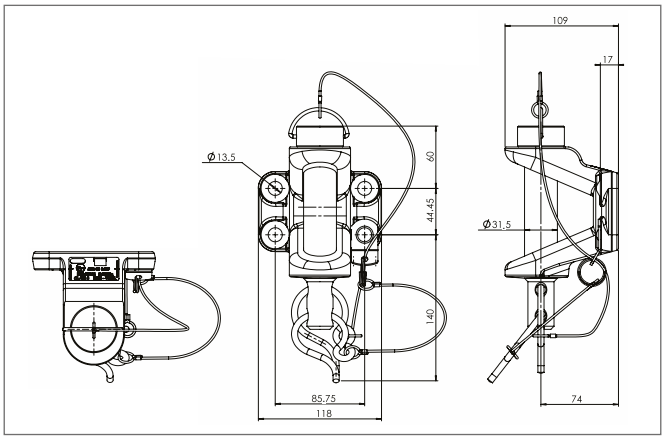

Part no.	SAP	Product
185010115 *(Bradley V351L)*	JAW E40T 3500KG LESS BOLTS	Bradley 3.5 t coupling mouth E40T
185010215 *(Bradley V501L)*	JAW E100T 3500KG LESS BOLTS	Bradley 3.5 t coupling mouth E100T
185010315 *(Bradley V354L)*	JAW E40TC 3500KG LESS BALL	Bradley 3.5 t coupling mouth with locking pin
185010415 *(Bradley V504L)*	JAW E100TC 3500 KG LESS BALL	Bradley 3.5 t coupling mouth with locking pin

NOTE:

use only genuine parts and accessories from Bradley so that your system meets all legally specified requirements and can be approved.

COUPLING MOUTHS

from Dixon-Bate

Tested: 2 million cycles

2-year warranty

BRADLEY AN AL-KO COMPANY

The coupling mouths from Dixon-Bate offer the same high quality and trailer load (3.5 t) as those from Bradley. However, they are more suitable for coupling systems with S values of 250 kg.

The product is also available with a hardened coupling bolt. Both products are supplied with a 2-year warranty.

FEATURES AND ADVANTAGES

- Durable, forged steel bolt. The stainless steel lanyard with nylon sheath offers improved split pin securing and fixing, and prevents it from catching.
- Approved as per Directive ECE-R55-01
- Galvanised as well as transparent passivated surface.
- Class: A-S

3.5 t coupling mouth

3.5 t | 2 | D VALUE 17.5 kN



- Bolt diameter: 25 mm
- Trailer load: 3.5 t
- D value: 17.5 kN
- Vertical load/S value: 250 kg
- Drawbar eye: min. internal diam. 30 mm
  Maximum cross-section: 30 mm
- 2-bolt mounting as per Directive ECE-R55-01

3.5 t coupling mouth with hardened bolt

3.5 t | 2 | D VALUE 17.5 kN



- With hardened bolt with Ø 25 mm, designed for 3,500 kg
- Type approval as per Directive ECE-R55-01

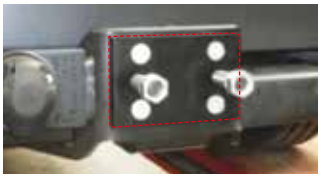

Adapter plate

See accessories for information

Part no. 185013915 *(Bradley 17898)*

SAP: ADAPTER PLATE - 4 BOLT EURO TO 2 BOLT UK

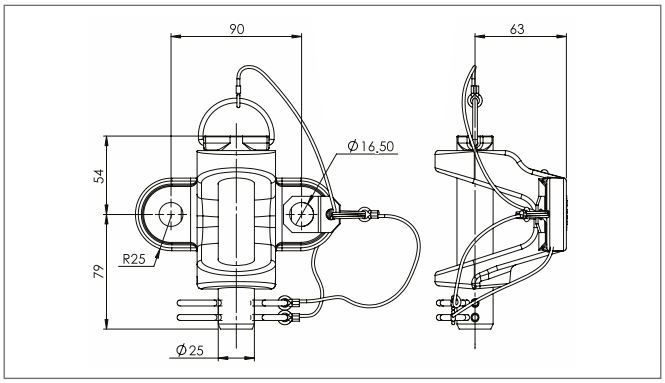



Part no.	Product	Replacement part no.	Product
185001715 *(Bradley DB201661)* **SAP:** JAW 3500KG DIXON BATE	3.5 t (17.5 kN) coupling mouth	185002615 *(Bradley DB68169)* **SAP:** BOLZEN 3500KG + SICHERUNGSSET	25 mm standard bolt/lanyard/split pin set
		185012915 *(Bradley DB68129)* **SAP:** KETTE/LASCHE/SPLINT 3500KG	Lanyard/split pin set for 25 mm bolts
185010515 *(Bradley DB201756)* **SAP:** JAW 3.5T HARDPIN DB	3.5 t (17.5 kN) coupling mouth with hardened bolt	185013415 *(Bradley DB67228)* **SAP:** 25MM BOLZEN GEHÄRTET + SEIL + SPLINT	Hardened 25 mm bolt/lanyard/strap/split pin
		185012915 *(Bradley DB68129)* **SAP:** KETTE/LASCHE/SPLINT 3500KG	Lanyard/split pin set for 25 mm bolts

BRADLEY AUTOJAW

Bradley AutoJaw is a semi-automatic, self-engaging hitch with which the trailer can be hitched with just one hand and that guarantees maximum safety for the driver.

The AutoJaw hitch combines all required hitch components. Coupling bolts cannot therefore be lost or mounted incorrectly. Nor do you run the risk of unintentionally using a coupling bolt without type approval for trailer operation.

The AutoJaw hitch automatically engages in the trailer's drawbar eye when the towing vehicle backs up to the trailer. The hitch is designed so that it is automatically engaged and locked when hitching. Towing the trailer without completely locking the AutoJaw hitch from Bradley beforehand is not possible. As the Bradley AutoJaw hitch can only be engaged and locked completely, reliability and safety are always guaranteed during trailer operation.

The Bradley AutoJaw hitch is also equipped with a locking device that can be used together with the standard round cylinder lock from Bradley.

FEATURES AND ADVANTAGES

- Ideal solution for coupling systems with 2-bolt mounting AND a high D value
- Self-engaging AutoJaw hitch with jam protection and minimal overhang
- No chains or wires
- High corrosion resistance, manufactured from durable cast iron
- Compatible with standard British drawbar eyes 30/40/50 mm

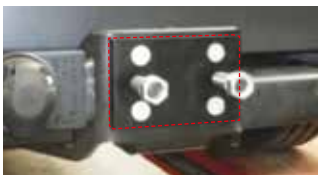

Adapter plate

See accessories for information

Part no. 185013915 *(Bradley 17898)*

SAP: ADAPTER PLATE - 4 BOLT EURO TO 2 BOLT UK

AutoJaw hitch with ball

3.5 t | 2 | D VALUE 23.41 kN



- Ball diameter: 50 mm
- Trailer load: 3.5 t
- D value: 23.41 kN
- Vertical load/S value: 350 kg
- Corrosion-resistant, black phosphated surface with black powder coating
- 2-bolt mounting as per Directive ECE-R55-01

Bolts not included in scope of delivery.
M16 bolts, strength class 8.8 or higher required

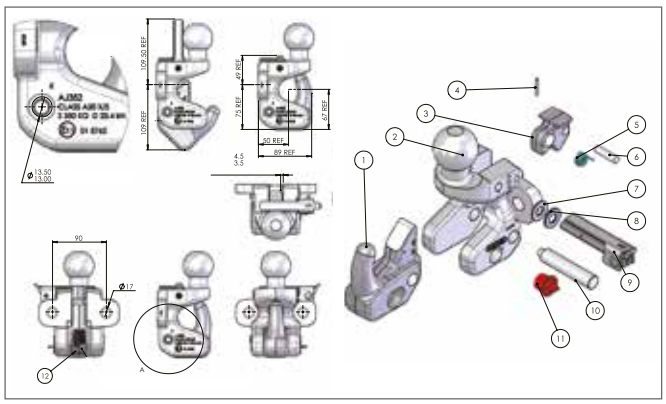

Part no.	Product
185001115 *(Bradley AJ352L2)* **SAP:** JAW AUTO CPL 3500KG 50MM BALL	Bradley AutoJaw with ball

AutoJaw hitch without ball

3.5 t | 4 | D VALUE 23.41 kN



- Trailer load: 3.5 t
- D value: 23.41 kN
- Vertical load/S value: 350 kg
- Corrosion-resistant, black phosphated surface with black powder coating
- 2-bolt mounting as per Directive ECE-R55-01

Bolts not included in scope of delivery.
M16 bolts, strength class 8.8 or higher required

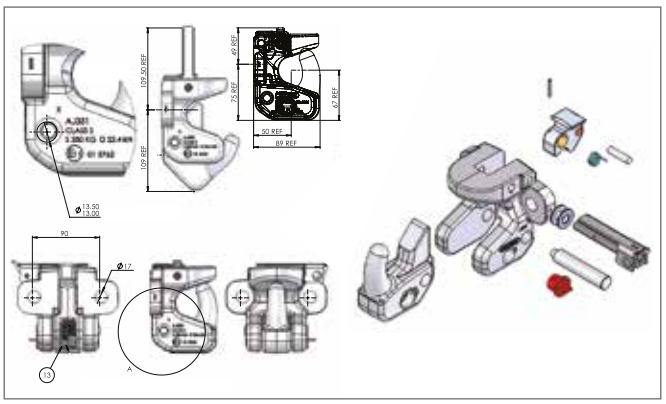

Part no.	Product
185008615 *(Bradley AJ351L2)* **SAP:** TOWING JAW AUTO LESS BALL	Bradley AutoJaw without ball





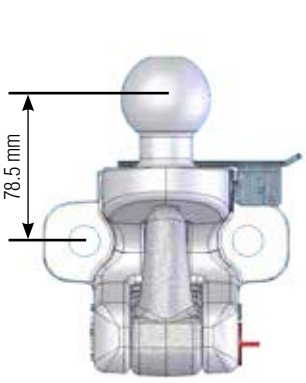

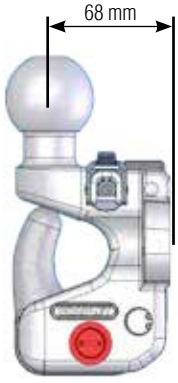

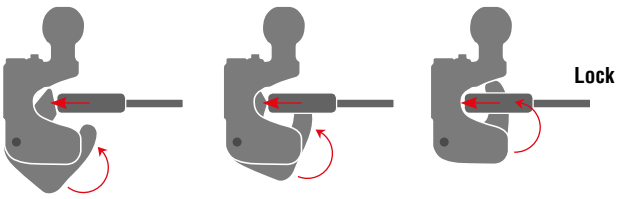

Keeps the driver away from the danger zone

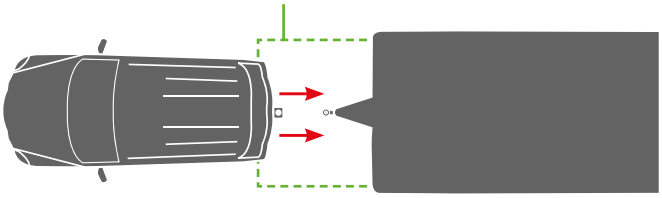

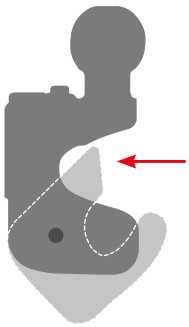

Automatic engagement of AutoJaw

Complete engagement and locking when hitching.



Towing the trailer without completely locking the AutoJaw hitch from Bradley beforehand is not possible. As the Bradley AutoJaw can only be engaged and locked completely, reliability and safety are always guaranteed during trailer operation.

High trailer load

The high D value indicates a maximum trailer weight of 3,500 kg, even when the trailer is hitched to a towing vehicle with a weight of 7.5 tonnes. This is unique for a coupling mouth with 2-bolt mounting.



> GVW 3,500 kg





HEIGHT-ADJUSTABLE HOLDERS

from Dixon-Bate

Tested: 2 million cycles

2-year warranty

The height-adjustable holders from Dixon-Bate enable trailers to be hitched at different heights. Each product has been designed for various hitch heights: from 100 mm to 260 mm in 50 mm steps.

The holder is positioned by hand, and is secured with one or two 19 mm stainless steel bolts with split pins. No tools are required to adjust the height. Any towball, any coupling mouth or any hook can be attached, as the product is pre-drilled for fastening using 2 or 4 bolts.

FEATURES AND ADVANTAGES

- Height-adjustable without using tools
- 3 to 5 positions can be set in 50 mm steps (all products)
- Simple and safe locking mechanism
- Designed completely in steel
- 4-bolt mounting on towing vehicle
- Hitches are fastened to the height-adjustable holder with 2 or 4 bolts
- Stainless steel bolts with Ø19 mm for securely fastening the sliding plate with split pins
- Corrosion-resistant, black phosphated surface with black powder coating
- Bolts and split pins with black, glossy zinc coating
- Additional towballs available *(see accessories)*

4 D VALUE 23.41 kN

- Height-adjustable holder 100 mm
- Height-adjustable: 3/2 positions in 50 mm steps
- 1 or 2-bolt variant available
- Bolts with Ø 19 mm for secure fastening with split pins
- Pre-drilled sliding plate with 4 holes for fastening with 2 or 4 bolts as per Directive ECE-R55-01

Height-adjustable holder 100 mm

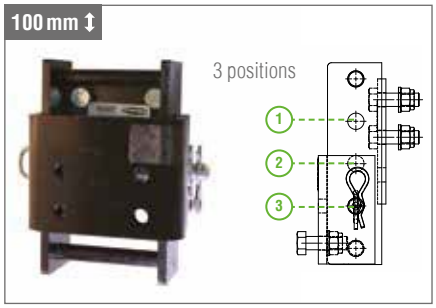

100 mm 2-bolt variant

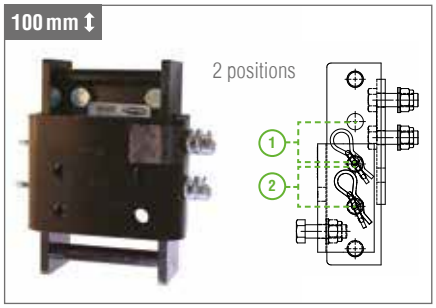

4 D VALUE 23.41 kN

- Height-adjustable holder 150 mm
- Height-adjustable: 4/3 positions in 50 mm steps
- 1 or 2-bolt variant available
- Bolts with Ø 19 mm for secure fastening with split pins
- Pre-drilled sliding plate with 4 holes for fastening with 2 or 4 bolts as per Directive ECE-R55-01

Height-adjustable holder 150 mm

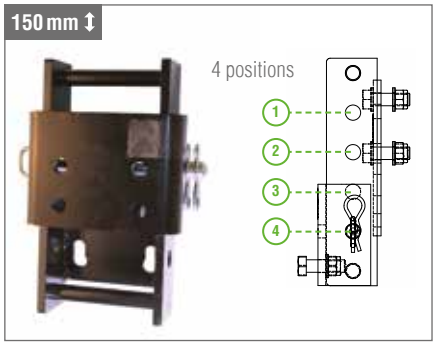

150 mm 2-bolt variant

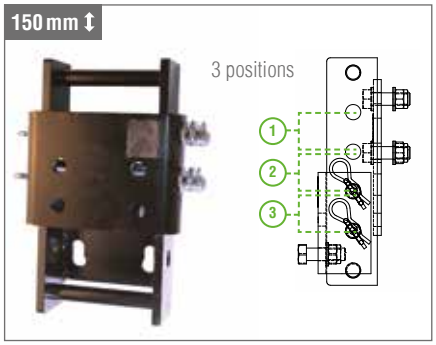

Part no.	SAP	Product
185010815 *(Bradley DB202092)*	ADJ COUPLING MOUNTING 100MM DB	Dixon-Bate height-adjustable holder 100 mm
185010915 *(Bradley DB202092/2PIN)*	ADJ COUPLING MOUNTING 100MM 2 PIN DB	100 mm 2-bolt variant
185002215 *(Bradley DB202091)*	COUPLING ADJ. MOUNTING 150MM	Dixon-Bate height-adjustable holder 150 mm
185011015 *(Bradley DB202091/2PIN)*	ADJ COUPLING MOUNTING 150MM 2 PIN DB	150 mm 2-bolt variant





4 **D VALUE** 23.41 kN

- Height-adjustable holder 200 mm
- Height-adjustable: 5/4 positions in 50 mm steps
- 1 or 2-bolt variant available
- Bolts with Ø 19 mm for secure fastening with split pins
- Pre-drilled sliding plate with 4 holes for fastening with 2 or 4 bolts as per Directive ECE-R55-01

Height-adjustable holder 200 mm

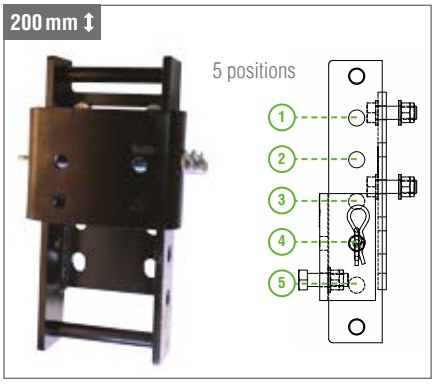

200 mm 2-bolt variant

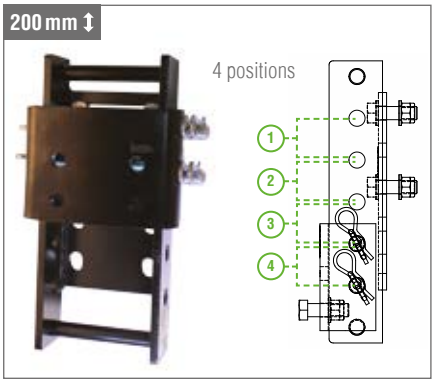

4 **D VALUE** 23.41 kN

- Height-adjustable holder 260 mm with 2 bolts
- Height-adjustable: 3 positions in 50 mm steps
- 2 x bolts with Ø 19 mm for secure fastening with split pins
- Pre-drilled sliding plate with 4 holes for fastening with 2 or 4 bolts as per Directive ECE-R55-01

Height-adjustable holder 260 mm

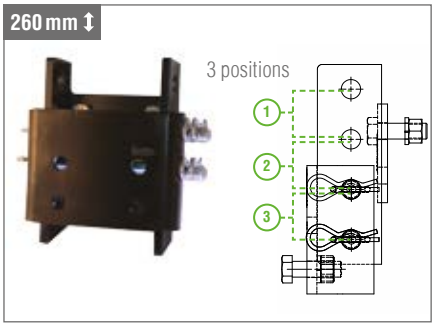

Suitable products



Additional towballs available, see accessories

Part no.	SAP	Product
185011115 *(Bradley DB202090)*	ADJ COUPLING MOUNTING 200MM DB	Dixon-Bate height-adjustable holder 200 mm
185011215 *(Bradley DB202090/2PIN)*	ADJ COUPLING MOUNTING 200MM 2 PIN DB	200 mm 2-bolt variant
185002415 *(Bradley DB202117)*	COUPLING ADJUSTABLE 2 PIN	Height-adjustable holder 260 mm with 2 bolts

PINTLES

from Dixon-Bate

Tested: 2 million cycles

2-year warranty

Pintles are hooks that can be rotated 360°, and with which the trailer can turn independently of the towing vehicle on uneven terrain. This is particularly important for military vehicles that are driven at high speed. The pintles from Dixon-Bate are also suitable for normal road traffic, as they can be locked in a fixed position when necessary.

The military has been placing its trust in Dixon-Bate pintles for over 50 years. With their robust design, the rotatable pintles can be put to diverse uses and are extremely durable. Thanks to their off-road suitability, they are the first choice for public companies and commercial users.

FEATURES AND ADVANTAGES

- Lower lock for securing the coupling mouth in one position or for 360° rotation
- Global export success: very popular with manufacturers of military vehicles
- Lock secured with stainless steel bolt and split pin
- The only products designed for operating trailers with a NATO drawbar eye (3 inches/76 mm) in the military sector
- With black electrophoretic powder coating

Light 3.5 t pintle

3.5 t | 4 | D VALUE 30.95 kN



- Trailer load: 3.5 t
- D value: 30.95 kN
- Drawbar eye: min. internal diam. 75 mm
- Cross-section thickness: 38 – 41 mm
- Lock secured with stainless steel bolt and split pin
- 4-bolt mounting as per Directive ECE-R55-01
- Bolts included in the scope of delivery

NATO part no.: 2540-99-825-6119

Land Rover part no. NRC 2051

Medium 7.5 t pintle

7.5 t | 4 | D VALUE 59.61 kN



- Trailer load: 7.5 t
- D value: 59.61 kN
- Drawbar eye: min. internal diam. 75 mm
- Cross-section thickness: 38 – 41 mm
- Lock secured with stainless steel bolt and split pin
- 4-bolt mounting as per Directive ECE-R55-01
- Bolts included in the scope of delivery

NATO part no.: 2540-99-825-6118

Part no.	SAP	Product
185003815 *(Bradley FV987958)*	HAKENKUPPLUNG - FÜR ZUGÖSE 76MM	Light 3.5 t pintle
185011315 *(Bradley FV987957)*	PINTLE MEDIUM - SUIT 76MM NATO EYE	Medium 7.5 t pintle



Global export success: very popular for military applications and with manufacturers of military vehicles

360° rotation of the pintle

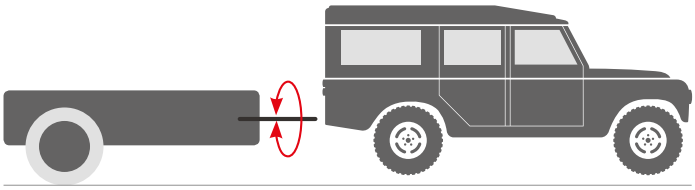

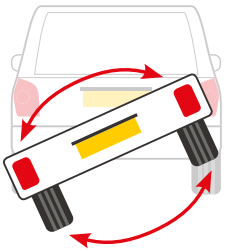

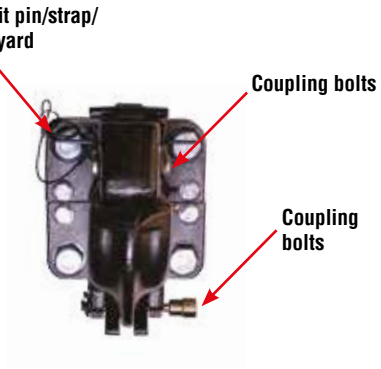

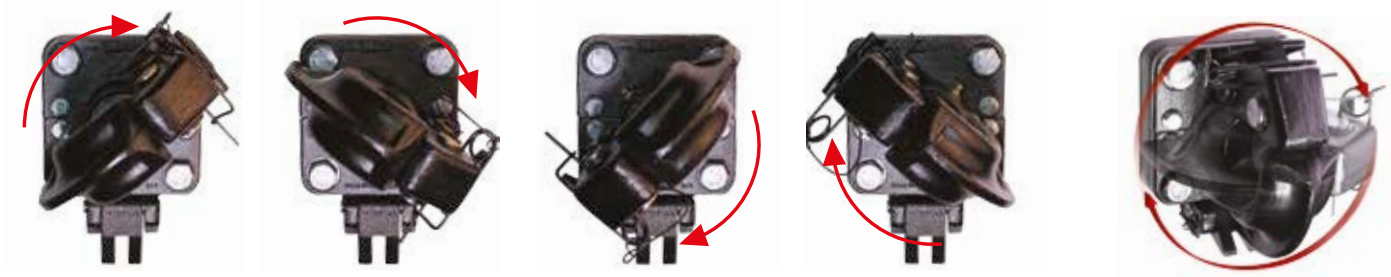

Can be rotated 360°; integrated device for securely fixing the pintle in position

Generally for military applications and off-road use

These pintles are perfectly suitable for coupling systems for various applications on uneven terrain: from light towing vehicles and light loads up to and including commercial, industrial and military applications involving heavy loads.





DIXON-BATE SHOCKLINK

Bigger engines, raised and hardened suspensions, the lever effect of the drawbar and driving on uneven terrain are typical of all-wheel drive and commercial towing vehicles, and can lead to fatigue symptoms in the driver and co-driver as well as damage to the trailer.

The Shocklink product range from Dixon-Bate has been developed to absorb up to 70% of the load. The two main products in the Shocklink series are "Shocklink mark II" for all-wheel drive and commercial towing vehicles and "Commercial Shocklink" for more heavy-duty towing vehicles. Commercial Shocklink is available as both a height-adjustable version and a version for mounting with 4 bolts or for fixed mounting.

FEATURES AND ADVANTAGES

- Versatile design: Shocklink products can be attached to the majority of towing vehicles
- Innovative design, including springs and rubber snubbers of high quality for increased shock absorbing
- Up to 70% of the load are absorbed
- Shocklink products are completely height-adjustable in multiple positions
- 4-bolt mounting on towing vehicle
- With useful installation, operating and maintenance instructions

3.5 t | 4 | D VALUE 15.26 kN

- Trailer load: 3.5 t
- D value: 15.26 kN
- Vertical load/S value: 80 kg or 100 kg
- For all-wheel drive and light commercial towing vehicles:
  – Permissible gross weight of the towing vehicle (GVW) 2,800 kg
  – Permissible gross weight of the trailer (GTW) 3,500 kg
- Pre-drilled, holes for 2 bolts for standard towball of 50 mm, universal hitch or coupling mouth
- Type approval as per Directive ECE-R55-01
- 1-year warranty; two bolts and installation instructions included in the scope of delivery



Shocklink mark II 80 kg



Shocklink mark II 100 kg



Shocklink adapter plate

3.5 t | 4 | D VALUE 28.17 kN

- Trailer load: 3.5 t
- D value: 28.17 kN
- Vertical load/S value: 100 kg
- For commercial towing vehicles:
  – Permissible gross weight of the towing vehicle (GVW) 16,000 kg
  – Permissible gross weight of the trailer (GTW) 3,500 kg
- Type approval as per Directive ECE-R55-01
- 4-bolt mounting



Commercial Shocklink, height-adjustable



Shocklink commercial adapter plate

Part no.	SAP	Product
185001815 *(Bradley DB202004)*	SHOCKLINK MK2 DIXON BATE	Shocklink mark II (80 kg)
185002315 *(Bradley DB202097)*	SHOCKLINK MK2 100KG	Shocklink mark II (100 kg)
185001915 *(Bradley DB202005)*	SHOCKLINK ADAPTOR PLATE DIXON BATE	Shocklink adapter plate
185011415 *(Bradley DB201928)*	SHOCKLINK ADJ 100KG COMMERCIAL DB	Commercial Shocklink, height-adjustable
185002115 *(Bradley DB202021)*	SHOCKLINK ADAPTOR PLATE C DIXON BATE	Shocklink commercial adapter plate





Shocklink adapter plates for all vehicles in your fleet

FUNCTION

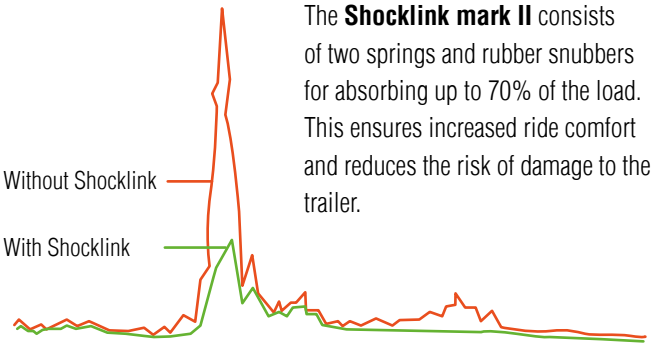

The **Shocklink mark II** consists of two springs and rubber snubbers for absorbing up to 70% of the load. This ensures increased ride comfort and reduces the risk of damage to the trailer.

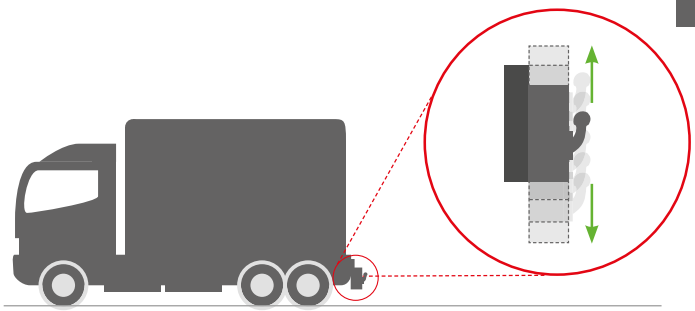

Shocklink mark II is installed between the towing vehicle's drawbar and the trailer.

During trailer operation, Shocklink mark II reacts to uneven roads by means of a vertically floating mounting, and absorbs shocks.

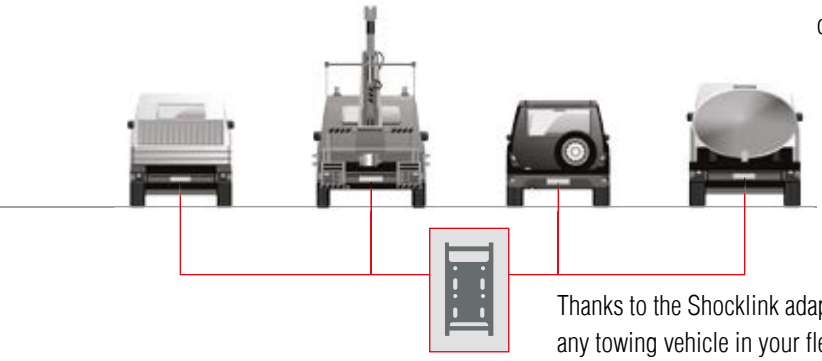

Thanks to the Shocklink adapter plate, you can attach the Shocklink to any towing vehicle in your fleet.

EASY FASTENING

The Shocklink mark II's scope of delivery includes two coupling bolts that are required to fasten the adapter plate or the height-adjustable coupling bracket.

Standard coupling bracket

Use the Shocklink adapter plate, which is attached directly on the coupling bracket, to fasten a coupling bracket with at least 4 hitch holes. If your coupling bracket has type approval, contact the coupling bracket manufacturer to make sure that using the Shocklink does not cause the approval to become void.

Height-adjustable holders

The Shocklink mark II includes mountings that are attached directly on the Dixon-Bate height-adjustable holders instead of the sliding plate.

ACCESSORIES

Replacement parts



25 mm bolt, lanyard, strap,
split pin for 3.5 t coupling mouth E40T
Part no.: 185013515 *(Bradley Kit171)*
SAP: 25MM BOLZEN + SEIL + SPLINT E40T



32mm bolt, lanyard, strap,
split pin for 3.5 t coupling mouth E100T
Part no.: 185013615 *(Bradley Kit169)*
SAP: 32MM BOLZEN + SEIL + SPLINT E100



25 mm ball head, lanyard, strap,
split pin for universal 3.5 t hitch E100TC
Part no.: 185005515 *(Bradley Kit172)*
SAP: 25MM KUGELKOPF + SEIL + SPLINT E100TC



32mm ball head, lanyard, strap,
split pin for universal 3.5 t hitch E100TC
Part no.: 185012715 *(Bradley Kit170)*
SAP: 32MM KUGELKOPF + SEIL + SPLINT E100TC



25 mm ball head, lanyard, strap,
split pin (without ball)
for universal 3.5 t hitch V354L
Part no.: 185013815 *(Bradley Kit178)*
SAP: 25MM BOLZEN + SEIL + SPLINT V354L



E40TC & E100TC
Locking handle
Part no.: 185012615 *(Bradley Kit173)*
SAP: VERRIEGELUNGSGRIFF E40TC & E100TC



32 mm bolt, chain, strap,
split pin for universal 5.0 t hitch
Part no.: 185013115 *(Bradley DB67187)*
SAP: 32MM BOLZEN 5000KG + SICHERUNGSSET



25 mm bolt, lanyard, strap,
split pin for 3.5 t coupling mouth
Part no.: 185012815 *(Bradley DB68121)*
SAP: 25 MM BOLZEN 3500KG + SICHERUNGSSET



Hardened 25 mm bolt, lanyard,
split pin for 3.5 t coupling mouth with hardened head
Part no.: 185013415 *(Bradley DB67228)*
SAP: 25MM BOLZEN GEHÄRTET + SEIL + SPLINT



Lanyard, strap,
split pin for 25 mm bolt
Part no.: 185012915 *(Bradley DB68129)*
SAP: KETTE/LASCHE/SPLINT 3500KG



Hardened 25 mm bolt and holder
for the 3.5 t stabiliser
Part no.: 185013315 *(Bradley DB68240)*
SAP: 25MM BOLZEN GEHÄRTET + HALTER

Towballs



Towball, compatible with European stabilisation device, 50 mm, with long wings
(17.0 kN trailer load)
Part no.: 185003715 *(Bradley DB67969)*
SAP: TOWBALL - LONG REACH NECK



50 mm towball
(17.0 kN trailer load)
Part no.: 185014115 *(Bradley DB67845)*
SAP: TOWBALL 50MM 2 BOLT DB



Bradley fin cover
for towballs
Part no.: 185014215 *(Bradley FC1)*
SAP: TOWBALL COVER SPRING LOADED CHROME

Adapter plate

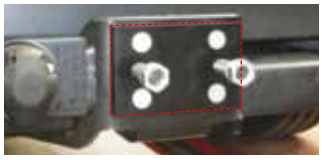

With this adapter plate (in black only), you can attach a European towball with 4 holes to a standard British fastening with 2 bolts.
Only included in the scope of delivery of the products described in this catalogue.
Part no.: 185013915 *(Bradley 17898)*
SAP: ADAPTER PLATE - 4 BOLT EURO TO 2 BOLT UK

8. ANTI-THEFT DEVICES



ANTI-THEFT DEVICES

Product range 416

Anti-theft devices for coupling heads

AL-KO 417 – 419

Winterhoff 420 – 421

Accessories 422 – 423

ANTI-THEFT DEVICES

Product range

Anti theft devices provide security protection for trailers

The extensive range of anti theft devices are designed for a diverse selection of applications. To make the choice easier, the following symbols specify the product group, additional uses and product features.



Secures when trailer is coupled



Secures when trailer is uncoupled



Protects against hitch removal

BASIC PRODUCT LINE

Simple protection against quick access / unauthorised trailer hitching or unhitching



PLUS PRODUCT LINE

Medium protection against quick access / unauthorised trailer hitching or unhitching



PREMIUM PROFI PRODUCT LINE

High-grade protection against quick access / unauthorised trailer hitching or unhitching



ANTI-THEFT DEVICES

Compact barrel lock and shackle lock





Barrel lock with Safety-Ball	
SAP: STECKSCHLOSS AK7/SAFETYBALL VERP EAN	
Part no.	1 225 494
Suitable for coupling head	Type AK 7 / AK 7V / AK 750
	0.09 kg
	1 unit -



Simultaneous locking anti-theft devices for dealers / hire companies on request!



Lock barrel Plus with Safety-Ball	
SAP: KIT STECKSCHLOSS AK301 / AK351	
Part no. (units)	1 222 692
Part no. (PU)	1 223 429
Suitable for coupling head	Type AK 301 / AK 351
(PU)	3.8 kg
	20 units -



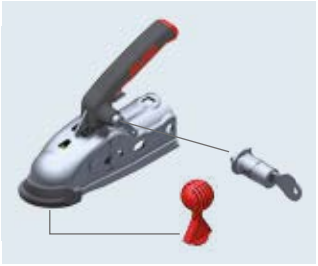

Lock barrel Plus with Safety-Ball	
SAP: KIT STECKSCHLOSS AK161/AK270	
Part no. (units)	1 730 411
Suitable for coupling head	AK 161 / AK 270
(PU)	0.15 kg
	– –



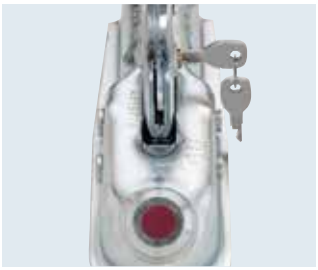

Compact barrel lock		
SAP: STECKSCHLOSS AK		
Part no.	203 216	203 141
Suitable for coupling head	Type AK 7 / AK 7V / AK 750 AK 10/2 / AK 251 / AK 252	Type AKS 2000 AK 30 / AK 35
	0.017 kg	0.025 kg
	20 units (bag) -	100 units (cardboard box) -





Compact barrel lock	
SAP: STECKSCHLOSS AKS1300	
Part no.	245 737
Suitable for coupling head	AKS 1300
	0.046 kg
	25 units (cardboard box) -





Compact shackle lock	
SAP: BÜGELSCHLOSS	
Part no. (units)	247 589
Part no. (PU)	247 925
Suitable for coupling head	AKS 160, AK 300, AK 350
(Units)	0.103 kg
	20 units (cardboard box) -

8

ANTI-THEFT DEVICES

Coupling Head Security Devices







Safety Security Device Premium	
SAP: SAFETY PREMIUM UK AK	
Part no. **suitable for coupling head**	1 730 538 AK 160 – Ø 35 mm
Part no. **suitable for coupling head**	1 730 539 AK 160 – Ø 50 mm
Part no. **suitable for coupling head**	1 730 540 AK 300 / AKS 1300 – Ø 50 mm
Part no. **suitable for coupling head**	1 730 541 AKS 3004 – Ø 50 mm
Test	Sold Secure
	4.9 kg
	– 120 units







Safety Plus Security Device	
SAP: AL-KO SAFETY AK	
Part no. **suitable for coupling head**	1 225 258 AKS™ 1300
Part no. **suitable for coupling head**	247 632 AKS™ 2000
Part no. **suitable for coupling head**	1 225 260 AKS™ 3004
Part no. **suitable for coupling head**	1 225 261 AK 160 – Ø 35
Part no. **suitable for coupling head**	1 225 259 AK 160 / 300
	1.5 kg
	– 100 units / 70 units (247 632)







Compact Safety Security Device	
SAP: AL-KO SAFETY AK	
Part no. **suitable for coupling head**	1 310 944 AKS™ 1300
Part no. **suitable for coupling head**	1 310 892 AKS™ 3004
Part no. **suitable for coupling head**	1 310 943 AK 160 – Ø 35
Part no. **suitable for coupling head**	1 310 890 AK 160 / 300
	1.4 kg
	– 150 units

Simultaneous locking anti-theft devices for dealers / hire companies on request!

ANTI-THEFT DEVICES

Universal Compact Lock







Universal Compact Lock	
SAP: DIEBSTAHLSICH KUGKUP UNI VERP	
Part no. (units)	1 224 081
Suitable for coupling head	Universal; Not suitable for stabiliser style coupling heads.
Material	Cast aluminium
	0.956 kg
	20 units -

Simultaneous locking anti-theft devices for dealers / hire companies on request!

Operation



Open hitch



Insert bottom part into the coupling head



Push the securing bar down. Done!

8

SAFETY-BALL

YOUR ADVANTAGE

Supplementary device to be used with anti theft devices when the trailer is uncoupled from towing vehicle.– **especially for stationary use.**

ANTI-THEFT PROTECTION

When the trailer is uncoupled the AL-KO Safety Ball is used to fill the space inside the coupling head.

SURFACE TREATMENT

Hard plastic

SAFETY

An anti theft device prevents the coupling handle from being lifted and the safety ball cannot be removed. This prevents the unlawful hitching of the trailer with a hook or smaller tow ball.

AL-KO TIP

To store it while driving, the **AL-KO Safety-Ball** can be inserted in the **AL-KO Soft-Ball**, and both can be stored together in the vehicle's luggage compartment.

SCOPE OF SUPPLY

Loose without packaging material.
1 cardboard box with 24 AL-KO Safety-Balls packed in a cardboard box. The cardboard box is transport packaging and can be used as a sales display after being opened.

MOUNTING

In unhitched condition, open the coupling head, insert the Safety-Ball and then secure with an anti-theft device.





Safety-Ball	
SAP: AL-KO SAFETY-BALL	
Part no. (units)	605 305
	0.07 kg
Part no. (PU)	247 104
	2.00 kg
	24 units -

ANTI-THEFT DEVICES

for coupling heads



SAFETY-BOX-K







SAFETY-BOX XL-K





	Part no.	suitable for				
ANTI-THEFT SAFETY-BOX-K	1860174 *(W5012)*	Universal Usage	2.16 kg	–	150	12
ANTI-THEFT SAFETY-BOX XL-K	1860176 *(W5014)*	Universal Usage	2.10 kg	–	150	12



ROBSTOP WW 30-K PLUS

Reinforced, hardened design with special lock cylinders and certificates.







ROBSTOP WW 13-150 PLUS

Reinforced, hardened design with special lock cylinders and certificates.





	Part no.	suitable for	Certificates				
ANTI-THEFT ROBSTOP WW 30-K PLUS	1860168 *(W1542)*	WW 30-K+Z, WW 30-KD50, WW 30-KD51	SCM (NL)	1.82 kg	–	500	12
ANTI-THEFT ROBSTOP WW 30-K PLUS-S	1860166 *(W1529)*	WW 30-K+Z, WW 30-KD50, WW 30-KD51	SBSC (S)	1.95 kg	–	500	12
ANTI-THEFT ROBSTOP WW 13-150 PLUS	1860167 *(W1532)*	WW 13-N, WW 150-RB, EM 150-RA, EM 150-RB	SCM (NL)	1.82 kg	–	500	12
ANTI-THEFT ROBSTOP WW 13-150 PLUS-S	1860165 *(W1527)*	WW 13-N, WW 150-RB, EM 150-RA, EM 150-RB	SBCS (S)	1.95 kg	–	500	12

ANTI-THEFT DEVICES

for coupling heads WS 3000 / WS 3500



ROBSTOP WS 3000

















SAFETY PACK WS

	Part no.	suitable for				
ANTI-THEFT ROBSTOP WS 3000	1860170 *(W1551)*	WS 3000 from production date 08-2002	1.48 kg	–	500	12
COUPLING LOCK SAFETY PACK WS 3000	1860847 *(W1448)*	WS 3000 from production date 08-2002	7.19 kg	–	60	12

8









ROBSTOP WS 3000 PLUS

Reinforced, hardened design with special lock cylinders and certificates.

















SAFETY PACK WS PLUS

	Part no.	suitable for	Certificates				
ANTI-THEFT ROBSTOP WS 3000 PLUS	1860171 *(W1553)*	WS 3000 from production date 08-2002	Sold Secure Gold (GB), SCM (NL)	1.92 kg	–	500	12
ANTI-THEFT ROBSTOP WS 3000 SSF	1860164 *(W1525)*	WS 3000 from production date 08-2002	SBSC (S)	2.03 kg	–	500	12
COUPLING LOCK SAFETY PACK WS 3000 PLUS	1861416 *(W1449)*	WS 3000 from production date 08-2002	Sold Secure Gold (GB), SCM (NL)	7.63 kg	–	60	12
ANTI-THEFT ROBSTOP WS 3500 *(not shown)*	1860169 *(W1545)*	WS 3500	Sold Secure Gold (GB), SCM (NL)	2.37 kg	–	400	12

ANTI-THEFT DEVICES

Accessories



DBS 8







DISKUS SAFETY





SAFETY BALL



	Part no.	suitable for				
ANTI-THEFT DBS 8	1860154 *(W1500)*	AK 7, EM 80, EM 150, EM 220, EM 300, EM 350, WW 8, WW 13, WW 150, WW 220, WW 30	0.02 kg	5	50	12
DISKUS LOCK 70 MM	1862126 *(W1556)*	Universal Usage	0.23 kg	–	72	12
SAFETY-BALL WW BLACK	1860486 *(W6208)*	Universal Usage	0.04 kg	–	500	12

AL-KO ANTI-THEFT DEVICE FOR CORNER STEADIES

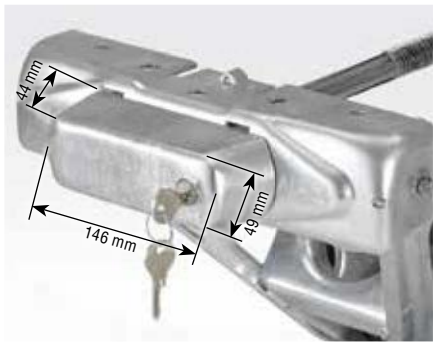

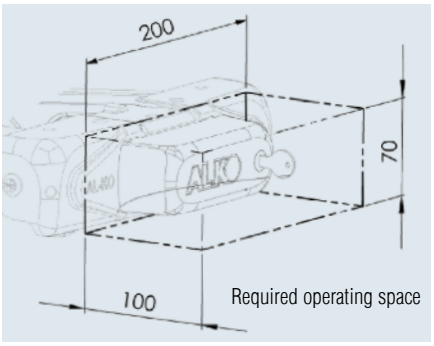

Corner Steady Anti Theft Device	
SAP: AL-KO SAFETY VERP FÜR PREMIUMSTÜTZE	
Part no. (units)	1 222 515
Suitable for	Corner steadies Premium 1,250 kg, from year of production 2006
Contents	2 units
	0.8 kg
	– –

OPERATION



Attach anti-rotation device



Insert the security device into the slot and push to the right



Push the lock in



SAFE

The safe solution for all valuables

YOUR ADVANTAGE

- On request as standard equipment or can be retrofitted.

INSTALLATION

Individual installation is possible, e.g. on the floor, cabinet wall, storage box, bed frame wall, etc.

SAFETY

Valuables are better protected against easy access in the permanently installed AL-KO safe for caravans, mobile homes and boats. The door of the sturdy safe is locked by two strong round bolts.

SURFACE TREATMENT

primed and painted

SCOPE OF SUPPLY

- 1 Safe with intermediate floor
- 2 Double sided keys
- 4 Fastening screws, nuts and cover caps with sealing lip
- 1 Mounting plate (also for use as drilling template)
- 1 Operating and mounting instructions











Safe	
SAP: TRESOR CARAVAN-VERPACKT	
Part no. (units)	245 091
External dimensions LxWxH	300 x 240 x 200mm
Internal dimensions LxWxH	285 x 230 x 180 mm
Volume	14 litres
	2.0 kg
	– 33 units

9. JOCKEY WHEELS



JOCKEY WHEELS

Product differentiation 426

AL-KO jockey wheels

Ø 48 mm 427 – 432

Ø 60 mm 433 – 434

Ø 73 mm 435

Ø 70 mm 436

Accessories for jockey wheels 437 – 439

Winterhoff jockey wheels

Ø 35 mm 440

Ø 48 mm 440 – 445

Ø 60 mm 445 – 451

Ø 70 mm 452 – 453

Accessories for jockey wheels 454 – 459

JOCKEY WHEELS

Product differentiation

Jockey wheels are used in diverse areas

You're spoiled for choice with our extensive range of products and features. To make the choice easier, the following symbols specify product group, additional uses and product characteristics.



Long design
More adjustment range (adjustable stroke)



Electrogalvanised
Standard corrosion protection



Hot-dip galvanised
High-quality corrosion protection



Crank with thrust block
Easier to use the crank



Removable crank
Removable crank prevents unintentional operation



Folding crank
Space-saving



Rotation lock
Prevents loss while driving



Anti-slip device
Prevents slipping in the clamp



Nose load scale
Displays nose load on the coupling point



Grease nipple
Ensures smooth operation



Manual operation
Pivoting the wheel up by hand



Foot operation
Pivoting the wheel up by foot



Fully automatic
Wheel is pivoted up fully automatically



Wheel is removable



Swing arm suspension
Cushions ground irregularities



Wheel load scale
Displays wheel load on the wheel



Wheel stop
Blocks the wheel



BASIC PRODUCT LINE

The **BASIC** products are entirely solid and robust. They are characterised by very good processing properties for the respective area of use, and are essential in day-to-day trailer use, as they fulfil the basic needs of the trailer users.

We ensure that these Basic variants also meet our high quality standards and exceed the legal minimum requirements.



PLUS PRODUCT LINE

The products from the **PLUS** category boast high quality of finishing, reliability, high-quality materials and longevity. Their high level of stability and smart technical details fulfil the high requirements in the day-to-day use of trailers.

All products have extended functions and are nevertheless user-friendly and have an attractive design.



PREMIUM PROFI PRODUCT LINE

PREMIUM PROFI products are characterised by trail-blazing design, sophisticated functions and top quality. They are innovative and traditional products for the highest demands and challenging areas of application. They are the gold standard in terms of processing, material and design. Their longevity ensures that you will have many years of joy with these products.

COMPACT JOCKEY WHEELS

Ø 48 mm, max. 150 kg

YOUR ADVANTAGE

- **Normal corrosion protection**
  Galvanised, coat thickness 8 µm.
- **Short version**



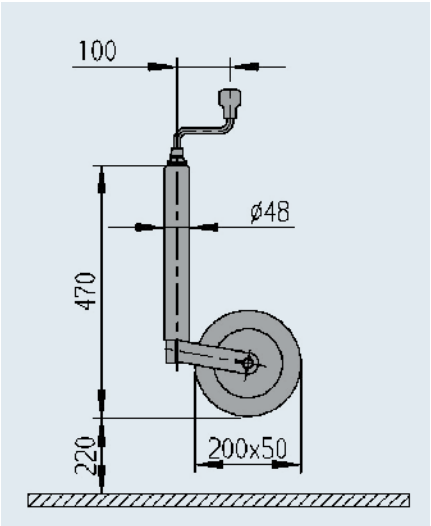

SAP: STÜTZRAD48COM 150KG 200X50KS-FELGE	
Jockey wheel Compact	
Part no.	1 222 433
Stationary nose load	Max. 150 kg
Nose load when manoeuvring	Max. 90 kg
Rim	Plastic
Wheel	200 x 50 solid rubber
Extended length	220 mm
	4.8 kg
	– 125 units



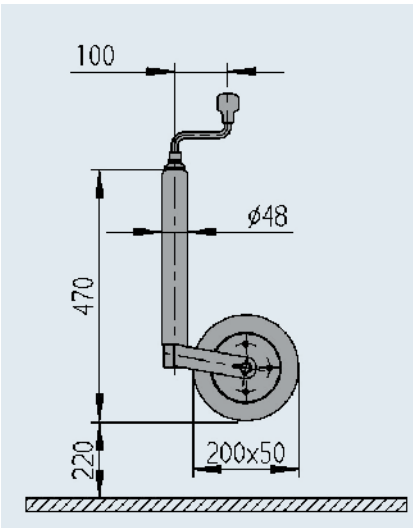

SAP: STÜTZRAD48COM 150KG 200X50ST-FELGE	
Jockey wheel Compact	
Part no.	1 222 434
Stationary nose load	Max. 150 kg
Nose load when manoeuvring	Max. 90 kg
Rim	steel
Wheel	200 x 50 solid rubber
Extended length	220 mm
	4.8 kg
	– 125 units

JOCKEY WHEEL WITH PINSTOP

Ø 48 mm, max. 150 kg

YOUR ADVANTAGE

- The AL-KO PINSTOP is a parking assistance system for small unbraked and braked trailers on relatively even ground. The legislator only specifies 2 wheel chocks as of a gross weight of 750 kg.
- The effect depends on the nose load, ground composition and gross trailer weight. Therefore, we recommend always conducting a function check after you have activated the PINSTOP on your trailer.

IMPORTANT!

The PINSTOP does not replace a handbrake or the obligation to secure trailers weighing over 750 kg with wheel chocks.



OPERATION

Move the PINSTOP by hand or with your foot to the corresponding position. When doing this, the locking pin is moved into the indentation in the rim by spring force, thereby stopping the wheel from turning and preventing the trailer from rolling away.



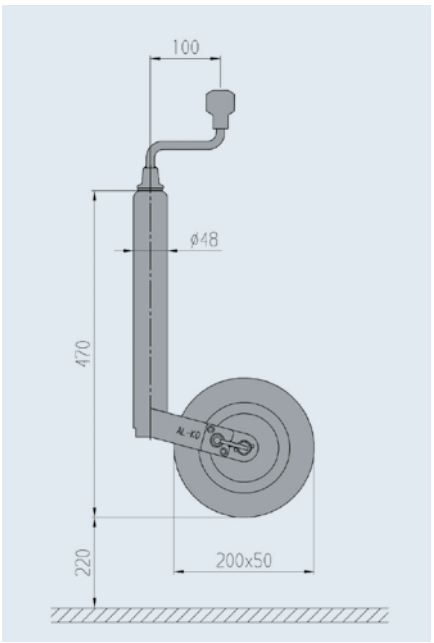

SAP: STÜTZRAD48COM AR150KG 200X50KS-FELG

Jockey wheel with PINSTOP

Part no.	1 224 351
Stationary nose load	Max. 150 kg
Nose load when manoeuvring	Max. 90 kg
Rim	Plastic
Wheel	200 x 50 solid rubber
Extended length	220 mm
	4.8 kg
	– 50 units

PLUS JOCKEY WHEELS

Ø 48 mm, max. 150 kg

YOUR ADVANTAGE

High-quality corrosion protection
Hot-dip galvanisation with high coat thickness up to 70 µm. Abrasion of the zinc coat during height adjustment with the clamp is therefore not critical. The structure of the zinc coating is flowery.

Extended version

Crank moves smoothly
The built-in thrust bearing under the crank facilitates operation.

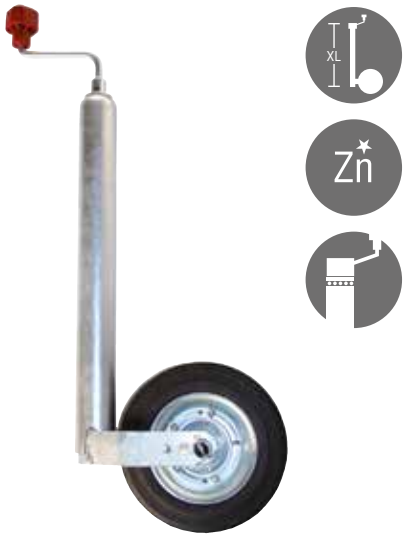

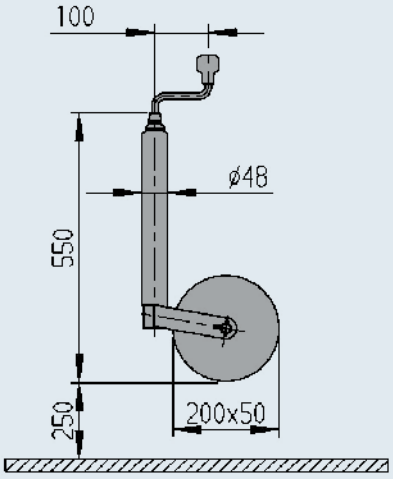

SAP: STÜTZRAD48PLUS 150KG 200X50ST-FELGE	
PLUS jockey wheel	
Part no.	1 222 436
Stationary nose load	Max. 150 kg
Nose load when manoeuvring	Max. 90 kg
Rim	steel
Wheel	200 x 50 solid rubber
Extended length	250 mm
	5.0 kg
	– 125 units



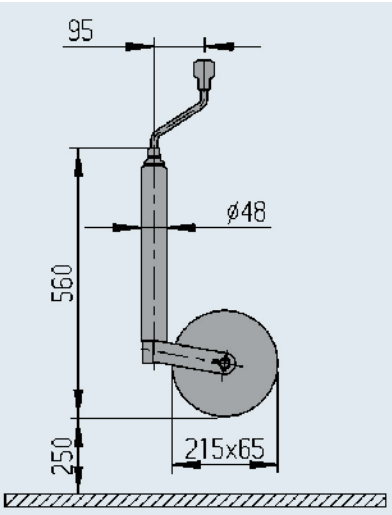

SAP: STÜTZRAD48PLUS 150KG 215X65SOFT-RAD	
PLUS jockey wheel	
Part no.	1 222 435
Stationary nose load	Max. 150 kg
Nose load when manoeuvring	Max. 90 kg
Rim	Plastic
Wheel	215 x 65 soft rubber
Extended length	250 mm
	5.0 kg
	– 75 units

PLUS JOCKEY WHEELS

Ø 48 mm, max. 200 to 300 kg

YOUR ADVANTAGE

High-quality corrosion protection
Hot-dip galvanisation with high coat thickness up to 70 µm. Abrasion of the zinc coat during height adjustment with the clamp is therefore not critical. The structure of the zinc coating is flowery.

Extended version

Crank moves smoothly
The built-in thrust bearing under the crank facilitates operation.



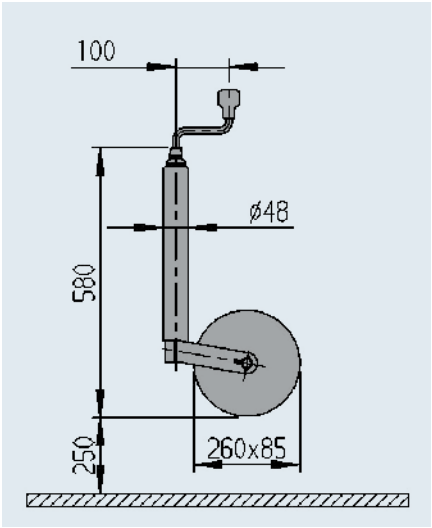

SAP: STÜTZRAD48PLUS 200KG 260X85LUFT-RAD	
PLUS jockey wheel	
Part no.	1 222 438
Stationary nose load	Max. 200 kg
Nose load when manoeuvring	Max. 120 kg
Rim	steel
Wheel	260 x 85, air
Extended length	250 mm
	5.0 kg
	– 70 units



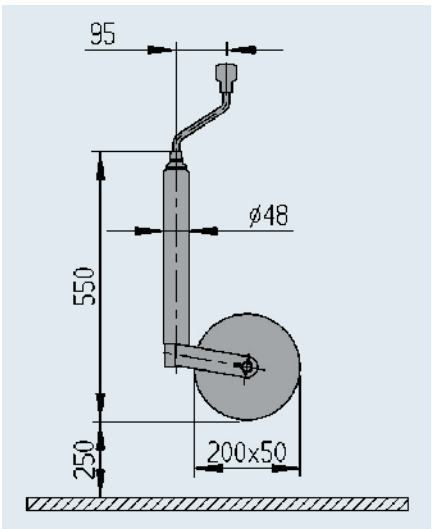

SAP: STÜTZRAD48PLUS 300KG 200X50ST-FELGE	
PLUS jockey wheel	
Part no.	1 222 437
Stationary nose load	Max. 300 kg
Nose load when manoeuvring	Max. 180 kg
Rim	steel
Wheel	200 x 50 solid rubber
Extended length	250 mm
	7.0 kg
	– 70 units

JOCKEY WHEEL WITH ANTI-SLIP DEVICE

Ø 48 mm, max. 300 kg

YOUR ADVANTAGE

Prevents the crank from shaking loose

During towing, vibrations can move the crank. Consequently, it is possible that the inside tube with wheel could move downwards out of the outside tube. A wire bracket welded onto the outside tube can be hooked onto the crank in this jockey wheel, thereby preventing this **extreme case**.

Prevents slipping

The outside tube of the jockey wheel has fluted indentations. The top part of the clamp of the new AE cast-iron Profi or the corresponding cast clamp have corresponding grooves. If the T-bar of the clamp is only tightened slightly, the jockey wheel cannot slip through; we refer to this as an **anti-slip device**. If the T-bar is not tightened at all, this anti-slip device will not function either.





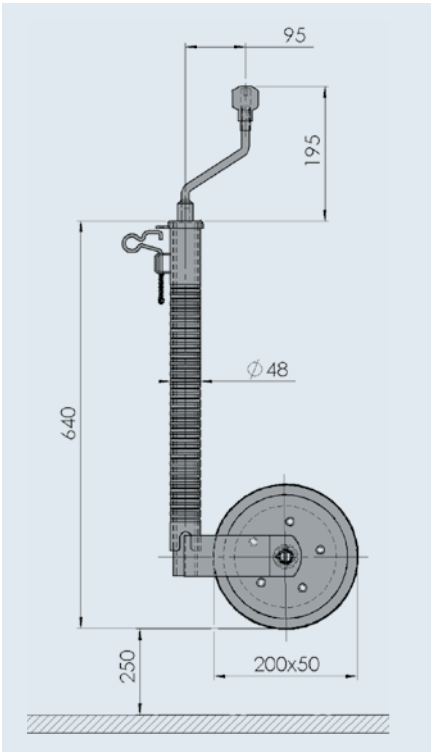

SAP: STÜTZRAD48RILLE300KG 200X50ST-FELGE

Jockey wheel Ø 48, 300 kg with anti-slip device

Part no.	1 223 614
Stationary nose load	Max. 300 kg
Nose load when manoeuvring	Max. 180 kg
Rim	steel
Wheel	200 x 50 solid rubber
Extended length	250 mm
	8.0 kg
	– 70 units

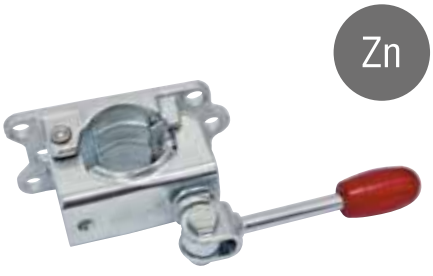

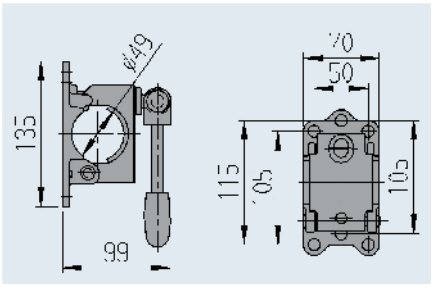

SAP: KLEMMSCHELLE M RILLE KPL GUSS 48 VZ

Clamp Ø 48 folding T-bar

Part no.	249 804
Stationary nose load	Max. 300 kg
	1.0 kg
	– 155 units

Can also be used for jockey wheel with anti-slip device (part no. 1 223 614)

PREMIUM JOCKEY WHEEL

Ø 48 mm, max. 300 kg

YOUR ADVANTAGE

1 Extremely stable design
(Stationary nose load max. 300 kg)

2 With integrated swing arm suspension
Unevenness in the ground (e.g. kerb stones) is cushioned by the suspension

3 With integrated wheel load indicator
- No separate balance necessary

4 Wide, crowned wheel 230x80 mm with a modern design, easy to manoeuvre
- Small contact area on hard ground
- Large contact area on soft ground

5 Crank easy to turn
The built-in thrust bearing under the crank facilitates operation.

6 Crank with ergonomic shape, removable

7 Wheel is removable

8 High-quality corrosion protection
Hot-dip galvanisation with large coat thickness up to 70 µm. Abrasion of the zinc coat during height adjustment with the clamp is thus not critical. The structure of the zinc coat is uneven (flowery)

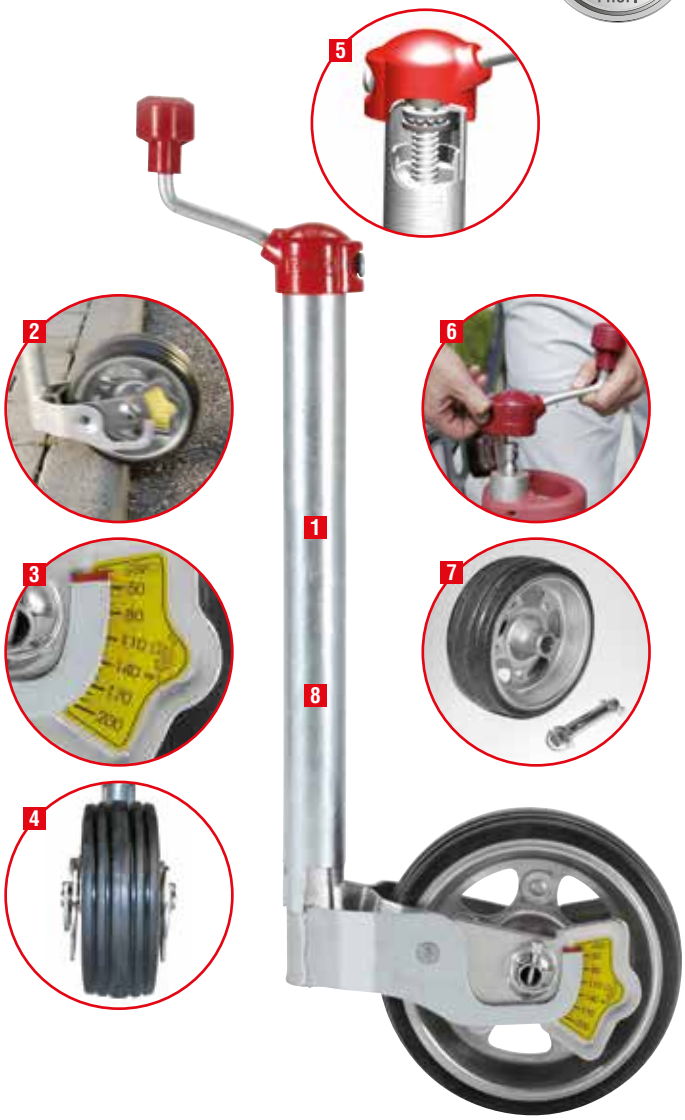





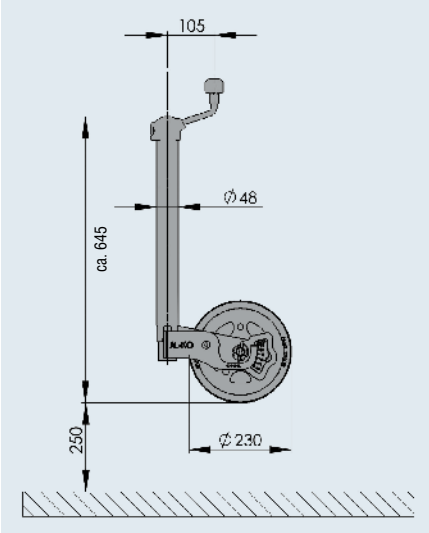

SAP: STÜTZRAD48PREM 300KG 230X80 LASTANZ	
Premium jockey wheel	
Part no.	1 221 695
Stationary nose load	Max. 300 kg
Nose load when manoeuvring	Max. 180 kg
Rim	steel
Wheel	230 x 80 solid rubber
Extended length	250 mm
	9.8 kg
	– 40 units

JOCKEY WHEEL

Ø 60 mm, max. 500 kg





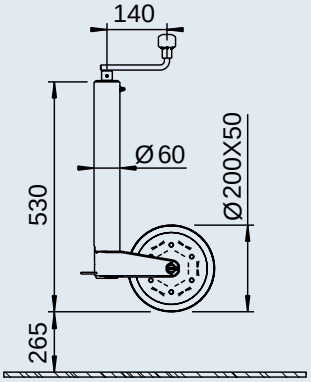

SAP: STUETZRAD SPNDL 500	
Jockey wheel, support shoe rigid	
Part no.	243 888
Stationary nose load	Max. 500 kg
Nose load when manoeuvring	Max. 300 kg
Rim	steel
Wheel	200 x 50 solid rubber
Extended length	265 mm
	8.0 kg
	– 75 units

JOCKEY WHEELS

Ø 60 mm, max. 500 kg





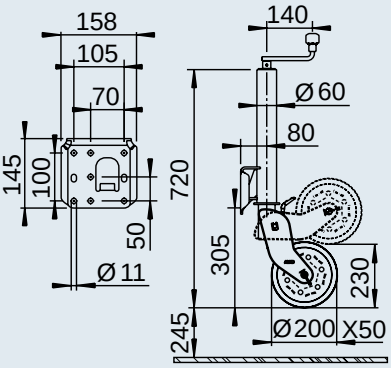

SAP: STUETZRAD SPNDL AUTOM 500 VERZINKT	
Jockey wheel, support shoe semi-automatic	
Part no.	242 061
Stationary nose load	Max. 500 kg
Nose load when manoeuvring	Max. 300 kg
Rim	steel
Wheel	200 x 50 solid rubber
Extended length	245 mm
	10.0 kg
	– 60 units





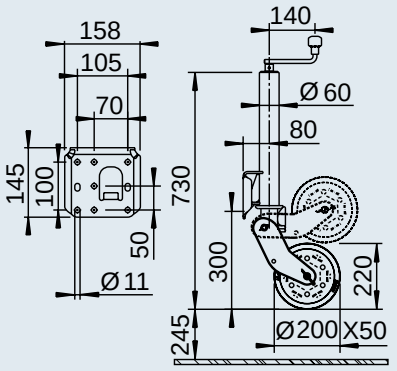

SAP: STÜTZRAD SPNDL AUTOM 500KG FEUVZ830	
Jockey wheel, support shoe fully automatic	
Part no.	1 212 382
Stationary nose load	Max. 500 kg
Nose load when manoeuvring	Max. 300 kg
Rim	steel
Wheel	200 x 50 solid rubber
Extended length	245 mm
	9.8 kg
	– 50 units

JOCKEY WHEELS

Ø 60 mm, max. 500 kg





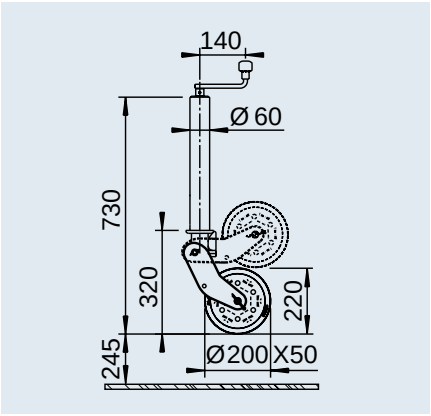

SAP: STÜTZRAD SPNDL AUTOM 500KG FEUVZ830	
Jockey wheel, support shoe fully automatic, without flange	
Part no.	1 654 777
Stationary nose load	Max. 500 kg
Nose load when manoeuvring	Max. 300 kg
Rim	steel
Wheel	200 x 50 solid rubber
Extended length	245 mm
	9.3 kg
	– 50 units

YOUR ADVANTAGE

- Long version for greater adjustment stroke
- Jockey wheel flange welded on low so there is greater swivel room for the support shoe when moving up
- Wide and crowned wheel 230 x 80 mm with very good manoeuvring properties and a modern design, small contact surface on hard ground, large contact surface on soft ground
- With grease nipple



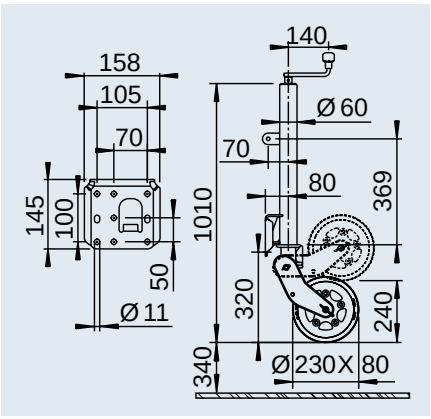

SAP: STÜTZRAD SPNDL AUTOM 500KG FEUVZ	
Jockey wheel, fully automatic with flange, extended	
Part no.	1 223 638
Stationary nose load	Max. 500 kg
Nose load when manoeuvring	Max. 300 kg
Rim	steel
Wheel	230 x 80 solid rubber
Extended length	340 mm
	12.0 kg
	– 30 units



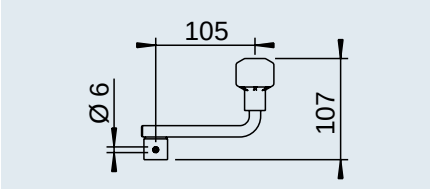

SAP: KURBEL KPL 105 LANG	
Loose crank	
Part no.	693 555
Length	105 mm
	0.3 kg

JOCKEY WHEELS

Ø 73 mm, max. 800 kg
for truck and agricultural trailers

YOUR ADVANTAGE

- **Stable design** thanks to thick-walled steel tubes, rolled spindles, ball thrust bearings, wheels on plastic bearings.

MOUNTING

- **Semi-automatic jockey wheel function** (semi-automatic jockey wheels are not subject to accident prevention regulations). When raising by turning, the inside tube with support shoe and wheel are guided into the outside tube by a spindle according to the adjustment stroke. The wheel with support shoe must now be hooked in by the operator.

PRACTICAL TIP

Only the static load capacities are usually quoted on the market.
Please remember that the load capacity will be reduced by up to 40% during manoeuvring (dynamic load).

Use spacer for jockey wheel carrier!

- More space between jockey wheel and drawbar section
- The jockey wheel can be attached 50 mm higher (increased ground clearance)





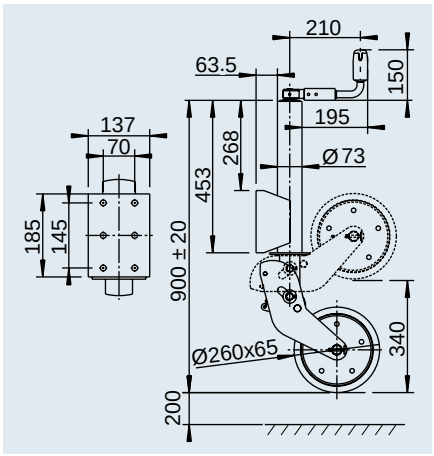





SAP: STÜTZRAD SPNDL AUTOM 800	
Jockey wheel, support shoe fully automatic	
Part no.	1 366 155
Stationary nose load	Max. 800 kg
Nose load when manoeuvring	Max. 480 kg
Rim	steel
Wheel	260 x 65 solid rubber
Extended length	200 mm
	21.2 kg
	– 30 units

9

JOCKEY WHEELS

Ø 70 mm, max. 1,200 to 1,500 kg for truck and agricultural trailers



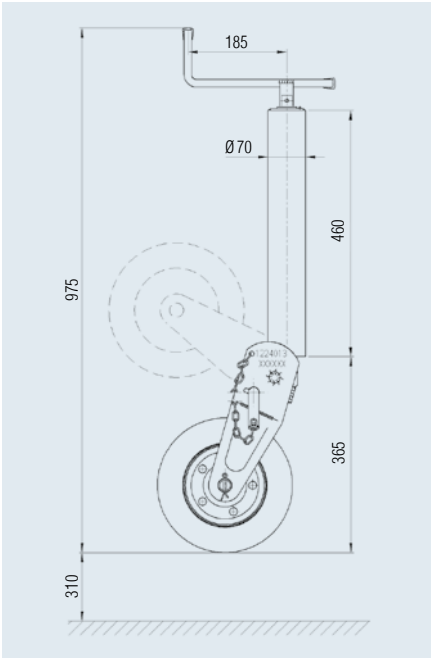

SAP: STUETZRAD SPNDL AUTOM 1200	
Jockey wheel, support shoe semi-automatic	
Part no.	1 224 013
Stationary nose load	Max. 1,200 kg
Nose load when manoeuvring	Max. 720 kg
Surface treatment	primed
Rim	steel
Wheel	250 x 80 solid rubber
Extended length	310 mm
	17.7 kg
	– 25 units



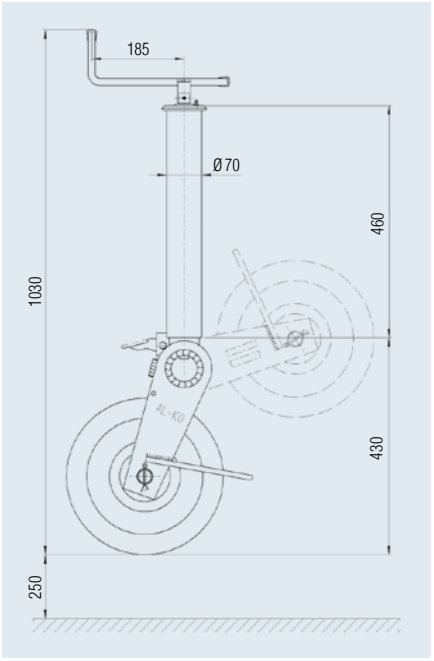

SAP: STUETZRAD SPNDL AUTOM 1500	
Jockey wheel, support shoe semi-automatic	
Part no.	1 224 012
Stationary nose load	Max. 1,500 kg
Nose load when manoeuvring	Max. 900 kg
Surface treatment	primed
Rim	steel
Wheel	310 x 90, steel
Extended length	250 mm
	25.0 kg
	– 20 units

ACCESSORIES FOR JOCKEY WHEELS

Clamps, Ø 48 to 60 mm

Zn



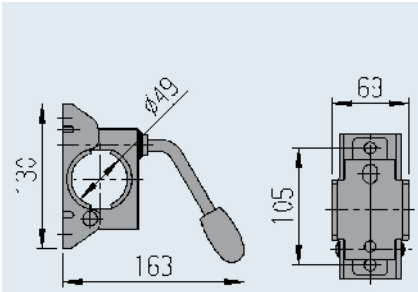

SAP: KLEMMSCHELLE F ROHR 48 VZ MONT WH

Clamp Ø 48, rigid T-bar

Part no. (mounted)	205 318 10
Part no. (loose)	205 318
Stationary nose load	Max. 200 kg
	0.8 kg
	– 300 units

Zn



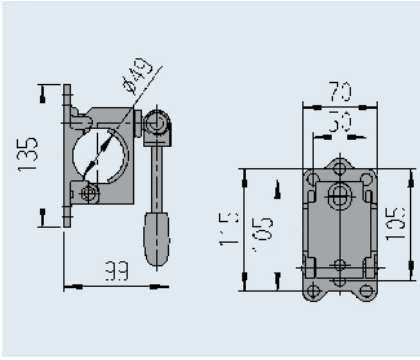

SAP: KLEMMSCHELLE M RILLE KPL GUSS 48 VZ

Clamp Ø 48, folding T-bar

Part no.	249 804
Stationary nose load	Max. 300 kg
	1.0 kg
	– 125 units

Zn



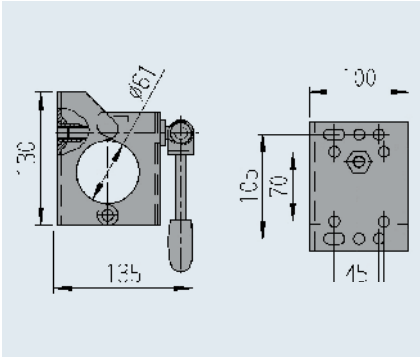

SAP: KLEMMSCHELLE KPL 60

Clamp Ø 60, folding T-bar

Part no.	249 859
Stationary nose load	Max. 500 kg
	2.0 kg
	– 125 units



Zn



Jockey wheel can be swivelled 90° parallel to the drawbar

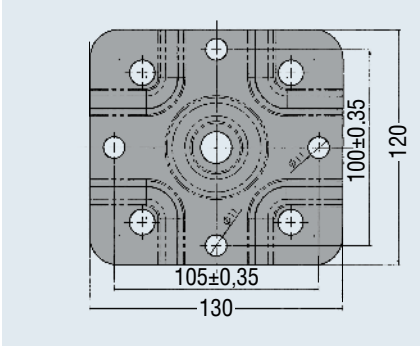

SAP: SCHWENKKOPF KPL MONT

Clamp Ø 48, pivoting

Part no.	1 335 092
Stationary nose load	Max. 300 kg
	2.42 kg
	– 50 units

ACCESSORIES FOR JOCKEY WHEELS

Manoeuvring handle, Ø 48 mm

YOUR ADVANTAGE

Manoeuvring aid

The sturdy handle provides ideal assistance when manoeuvring caravans and truck trailers of all kinds. Can be retrofitted on jockey wheels with Ø 48 mm outside tube.

Protection

The manoeuvring handle also prevents loss of the jockey wheel when towing if a locking bar has not been tightened properly.

SCOPE OF SUPPLY

Manoeuvring handle including fastening material and mounting instructions, packaged



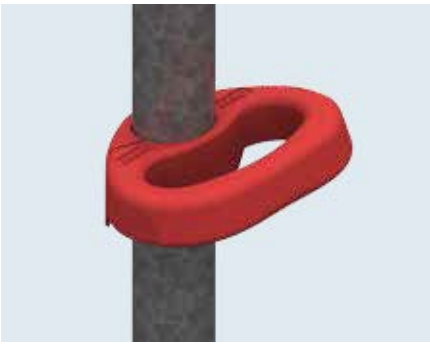

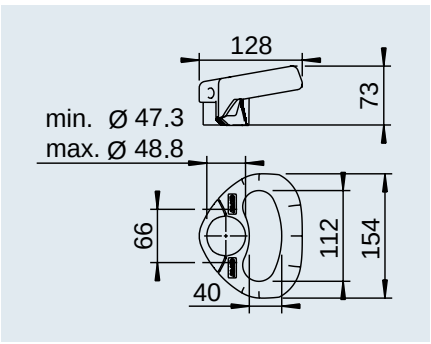

SAP: RANGIERGRIFF STÜTZRAD48 VE-1 STÜCK	
Manoeuvring handle for jockey wheels Ø 48	
Part no. (individual)	1 210 182
Part no. (PU)	1 210 867
Surface treatment	Plastic, red RAL 3000
	0.2 kg
	– 20 units

ACCESSORIES FOR JOCKEY WHEELS

Spacer / jockey wheel flange



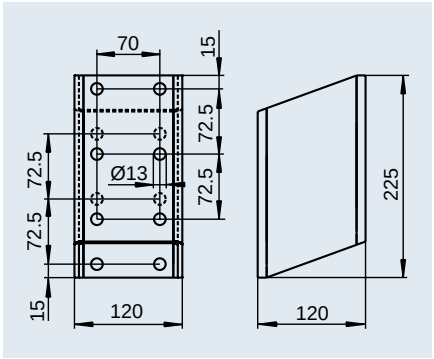

SAP: DISTANZ STÜTZRADHALTER

Spacer for jockey wheel carrier

Part no.	1 362 106
	3.0 kg
	1 unit –



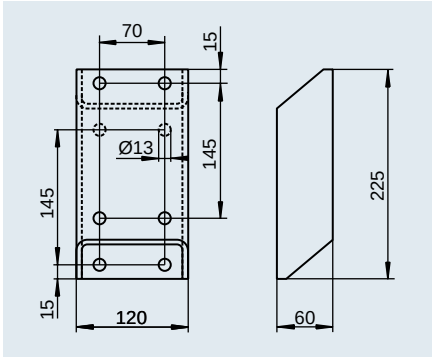

SAP: DISTANZ STÜTZRADHALTER FEUVZ

Spacer for jockey wheel carrier

Part no.	1 336 503
	2.0 kg
	1 unit –



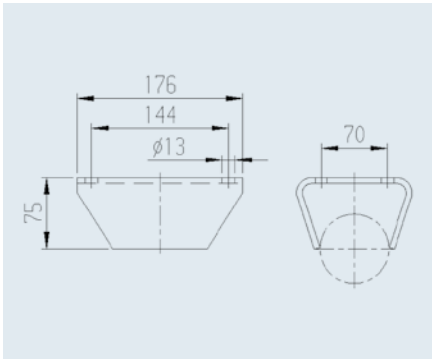

SAP: FLANSCH STUETZRAD 70 D

Jockey wheel flange Ø 70

Part no.	1 224 014
Stationary nose load	Max. 1,500 kg
Nose load when manoeuvring	Max. 900 kg
	1.7 kg
	– 100 units

9

JOCKEY WHEEL ST 35 / ST 48

Ø 35 – 48 mm, max. 75 – 150 kg

BASIC



Zn

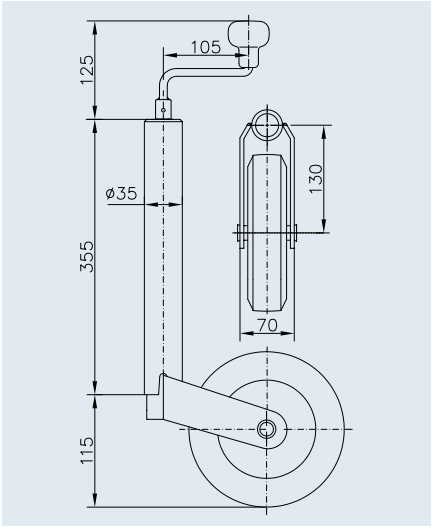

SAP: STÜTZRAD ST 35-160 V

Jockey wheel ST 35-160 V

Part no.	275620 *(W 6010)*
Stationary nose load	Max. 75 kg
Nose load when manoeuvring	Max. 45 kg
Rim	Plastic
Wheel	160 x 40 solid rubber
Extended length	220 mm
	2.56 kg
	EWP 150 / GiBo 170
	12



Zn

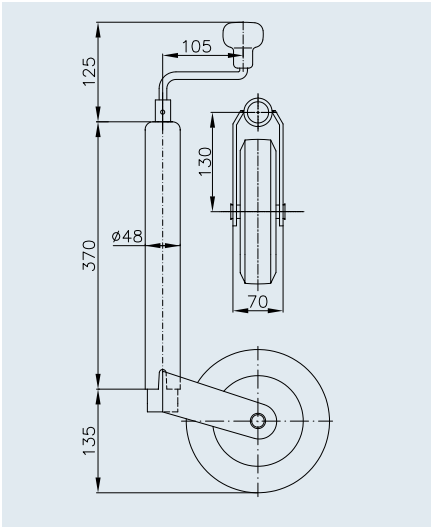

SAP: STÜTZRAD ST 48-200 V

Jockey wheel ST 48-200 V

Part no.	1860904 *(W 6030)*
Stationary nose load	Max. 150 kg
Nose load when manoeuvring	Max. 90 kg
Rim	Plastic
Wheel	200 x 50 solid rubber
Extended length	220 mm
	4.43 kg
	EWP 125 / GiBo 125
	12



Zn

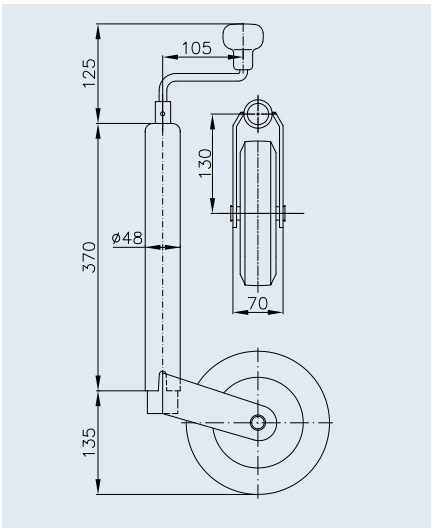

SAP: STÜTZRAD ST 48-200 VB

Jockey wheel ST 48-200 VB

Part no.	1860905 *(W 6032)*
Stationary nose load	Max. 150 kg
Nose load when manoeuvring	Max. 90 kg
Rim	steel
Wheel	200 x 50 solid rubber
Extended length	220 mm
	4.65 kg
	EWP 125 / GiBo 125
	12

JOCKEY WHEEL ST 48

Ø 48 mm, max. 150 kg



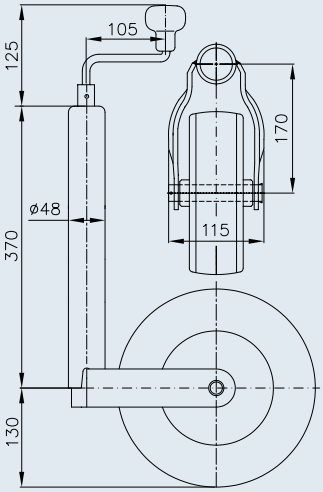

SAP: STÜTZRAD ST 48-260 L	
Jockey wheel ST 48-260 L	
Part no.	1860908 *(W 6050)*
Stationary nose load	Max. 150 kg
Nose load when manoeuvring	Max. 90 kg
Rim	Plastic
Wheel	260 x 85, air
Extended length	210 mm
	4.80 kg
	EWP 60 / GiBo 60
	12



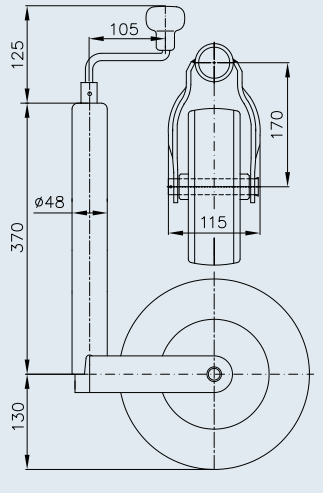

SAP: STÜTZRAD ST 48-260 LB	
Jockey wheel ST 48-260 LB	
Part no.	1860909 *(W 6052)*
Stationary nose load	Max. 150 kg
Nose load when manoeuvring	Max. 90 kg
Rim	steel
Wheel	260 x 85, air
Extended length	210 mm
	5.10 kg
	EWP 60 / GiBo 60
	12



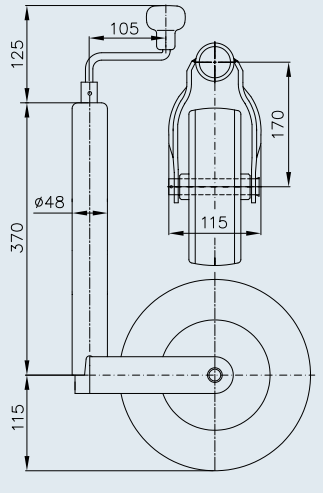

SAP: STÜTZRAD ST 48-255 S	
Jockey wheel ST 48-255 S	
Part no.	1860917 *(W 6070)*
Stationary nose load	Max. 150 kg
Nose load when manoeuvring	Max. 90 kg
Rim	Plastic
Wheel	225 x 70 solid rubber
Extended length	210 mm
	5.54 kg
	EWP 75 / GiBo 75
	12

JOCKEY WHEEL ST 48

Ø 48 mm, max. 150 kg



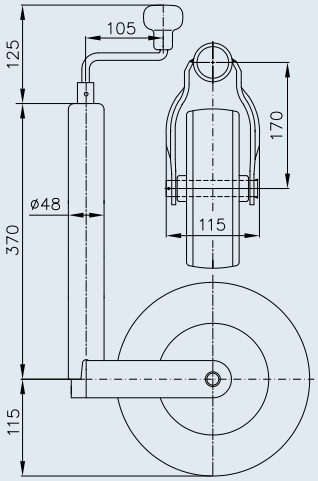

SAP: STÜTZRAD ST 48-255 SB

Jockey wheel ST 48-255 SB

Part no.	1860919 *(W 6072)*
Stationary nose load	Max. 150 kg
Nose load when manoeuvring	Max. 90 kg
Rim	steel
Wheel	225 x 70 solid rubber
Extended length	210 mm
	5.83 kg
	EWP 75 / GiBo 75
	12



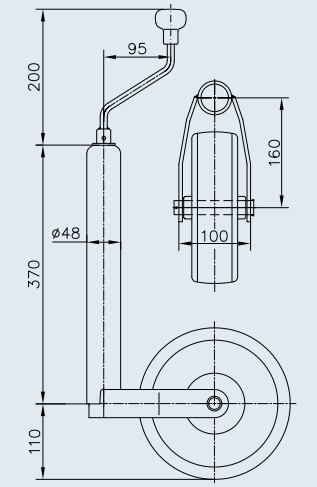

SAP: STÜTZRAD ST 48-C-240 S

Jockey wheel ST 48-C-240 S

Part no.	1860912 *(W 6065)*
Stationary nose load	Max. 150 kg
Nose load when manoeuvring	Max. 90 kg
Rim	Plastic
Wheel	215 x 70, rubber
Extended length	220 mm
	4.51 kg
	EWP 75 / GiBo 75
	12



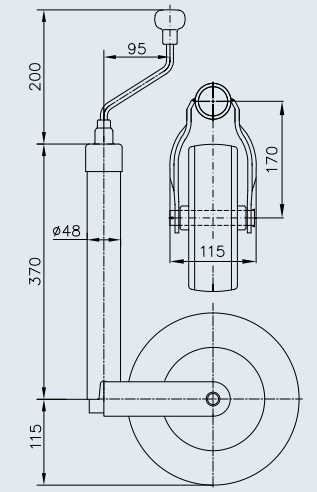

SAP: STÜTZRAD ST 48-CE-240 S

Jockey wheel ST 48-CE-255 SB

Part no.	1860911 *(W 6063)*
Stationary nose load	Max. 150 kg
Nose load when manoeuvring	Max. 90 kg
Rim	steel
Wheel	225 x 70 solid rubber
Extended length	220 mm
	5.91 kg
	EWP 70 / GiBo 75
	12

JOCKEY WHEEL ST 48

reinforced version, Ø 48 mm, max. 200 – 250 kg





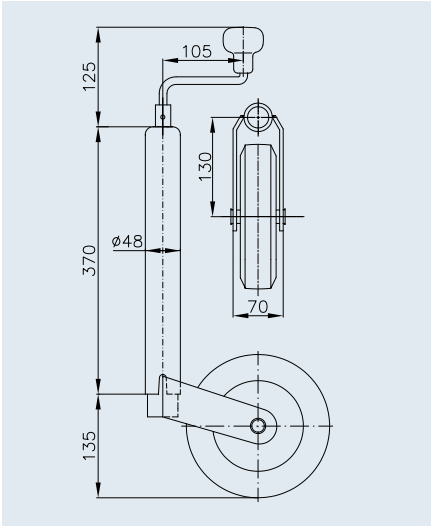

SAP: STÜTZRAD ST 48-V-200 VB

Jockey wheel ST 48-V-200 VB

Part no.	1860926 *(W 6122)*
Stationary nose load	Max. 200 kg
Nose load when manoeuvring	Max. 120 kg
Rim	steel
Wheel	200 x 50 solid rubber
Extended length	230 mm
	5.06 kg
	EWP 125 / GiBo 125
	12





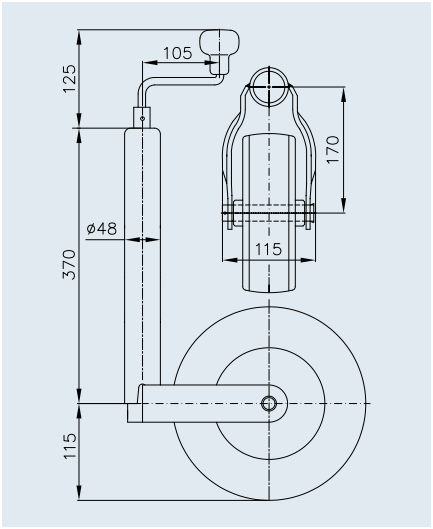

SAP: STÜTZRAD ST 48-V-255 SB

Jockey wheel ST 48-V-255 SB

Part no.	1860927 *(W 6124)*
Stationary nose load	Max. 200 kg
Nose load when manoeuvring	Max. 120 kg
Rim	steel
Wheel	225 x 70 solid rubber
Extended length	230 mm
	6.28 kg
	EWP 75 / GiBo 75
	12





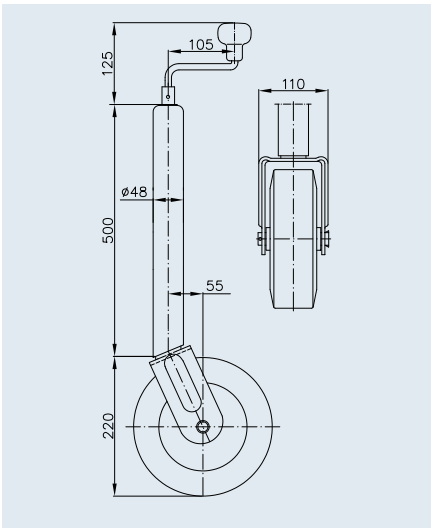

SAP: STÜTZRAD ST 48-VLS-255 SB

Jockey wheel ST 48-VLS-255 SB

Part no.	1860871 *(W 3432)*
Stationary nose load	Max. 250 kg
Nose load when manoeuvring	Max. 150 kg
Rim	steel
Wheel	225 x 70 solid rubber
Extended length	230 mm
	7.60 kg
	EWP 70 / GiBo 70
	12

JOCKEY WHEEL ST 48

with integrated nose load indicator, Ø 48 mm, max. 150 kg



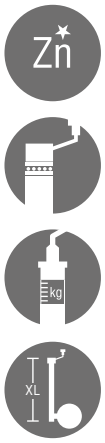

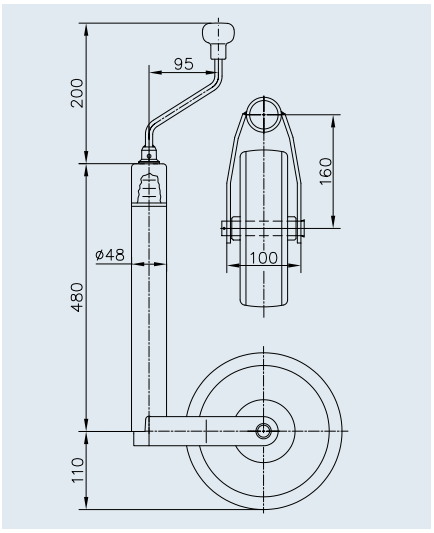

SAP: STÜTZRAD ST 48-CW-240 S+BA	
Jockey wheel ST 48-CW-240 S	
Part no.	1860923 *(W 6085)*
Stationary nose load	Max. 150 kg
Nose load when manoeuvring	Max. 90 kg
Rim	Plastic
Wheel	215 x 70, rubber
Extended length	220 mm
	5.30 kg
	EWP 75 / GiBo 75
	12



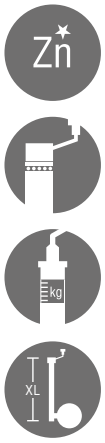

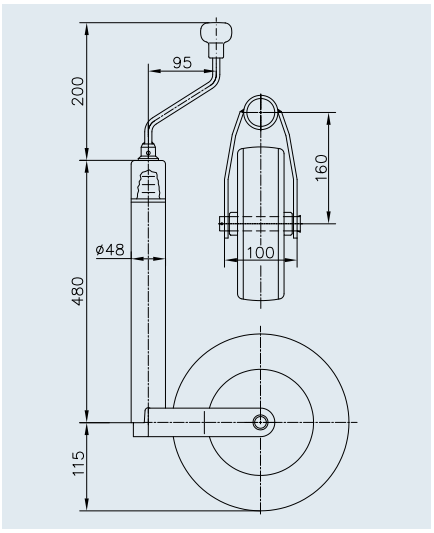

SAP: STÜTZRAD ST 48-CW-255 SB+BA	
Jockey wheel ST 48-CW-255 SB	
Part no.	1860924 *(W 6095)*
Stationary nose load	Max. 150 kg
Nose load when manoeuvring	Max. 90 kg
Rim	steel
Wheel	225 x 70 solid rubber
Extended length	220 mm
	6.62 kg
	EWP 75 / GiBo 75
	12



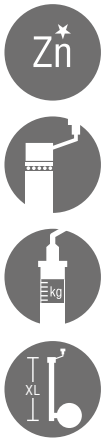

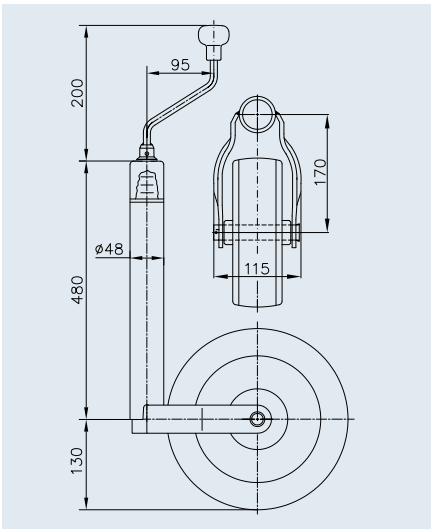

SAP: STÜTZRAD ST 48-CW-260 LB+BA	
Jockey wheel ST 48-CW-260 LB	
Part no.	1860925 *(W 6097)*
Stationary nose load	Max. 150 kg
Nose load when manoeuvring	Max. 90 kg
Rim	steel
Wheel	260 x 85, air
Extended length	220 mm
	5.57 kg
	EWP 60 / GiBo 60
	12

JOCKEY WHEEL ST 48

with integrated brake function, Ø 48 mm, max. 150 kg



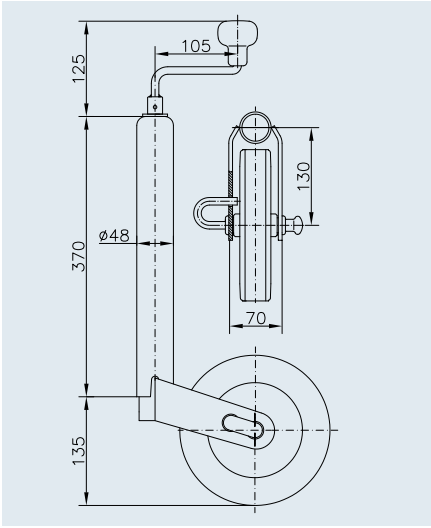

SAP: STÜTZRAD ST 48-RB-200 V	
Jockey wheel ST 48-RB-200 V	
Part no.	1860910 *(W 6059)*
Stationary nose load	Max. 150 kg
Nose load when manoeuvring	Max. 90 kg
Rim	Plastic
Wheel	200 x 50 solid rubber
Extended length	220 mm
	4.60 kg
	EWP 100 / GiBo 100
	12

JOCKEY WHEEL ST 60

Ø 60 mm, max. 250 kg



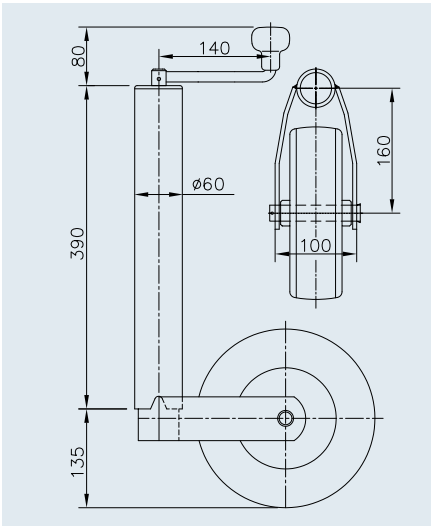

SAP: STÜTZRAD ST 60-255 SB	
Jockey wheel ST 60-255 SB	
Part no.	1860678 *(W 4062)*
Stationary nose load	Max. 250 kg
Nose load when manoeuvring	Max. 150 kg
Rim	steel
Wheel	225 x 70 solid rubber
Extended length	230 mm
	7.75 kg
	EWP 75 / GiBo 75
	12

JOCKEY WHEEL ST 60

reinforced version, Ø 60 mm, max. 400 – 500 kg



Zn

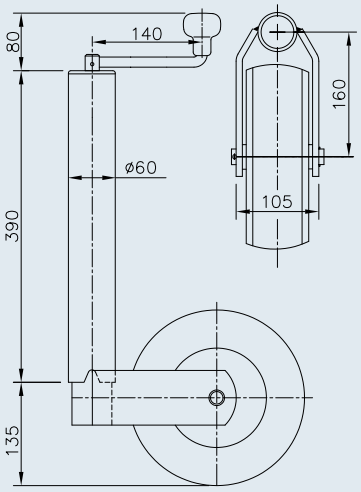

SAP: STÜTZRAD ST 60-V-255 SB

Jockey wheel ST 60-V-255 SB

Part no.	1860889 *(W 4066)*
Stationary nose load	Max. 400 kg
Nose load when manoeuvring	Max. 240 kg
Rim	steel
Wheel	225 x 70 solid rubber
Extended length	230 mm
	9.23 kg
	EWP 70 / GiBo 70
	12



Zn

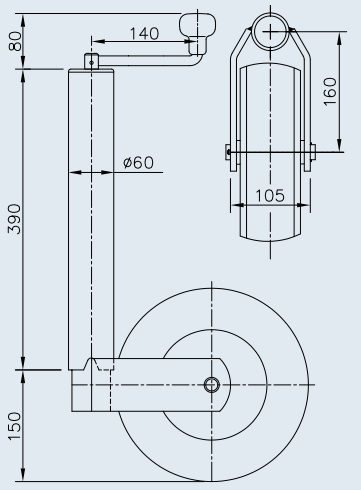

SAP: STÜTZRAD ST 60-V-255 VB

Jockey wheel ST 60-V-255 VB

Part no.	1860891 *(W 4068)*
Stationary nose load	Max. 500 kg
Nose load when manoeuvring	Max. 300 kg
Rim	steel
Wheel	225 x 80 solid rubber
Extended length	230 mm
	10.65 kg
	EWP 60 / GiBo 60
	12

JOCKEY WHEEL K 60

with semi-automatic support shoe, Ø 60 mm, max. 250 kg





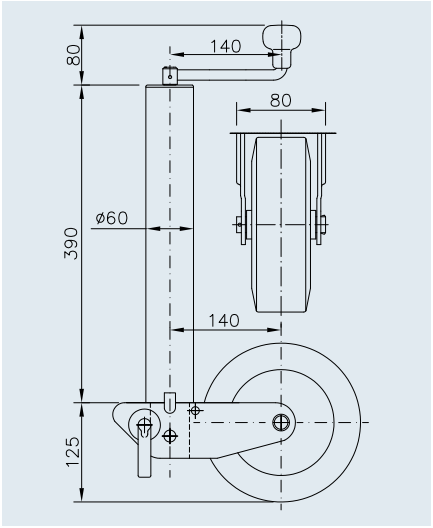

SAP: STÜTZRAD K 60-200 VB	
Jockey wheel K 60-200 VB	
Part no.	1860879 *(W 4020)*
Stationary nose load	Max. 250 kg
Nose load when manoeuvring	Max. 150 kg
Rim	steel
Wheel	200 x 50 solid rubber
Extended length	180 + 230 mm
	7.99 kg
	EWP 70 / GiBo 70
	12





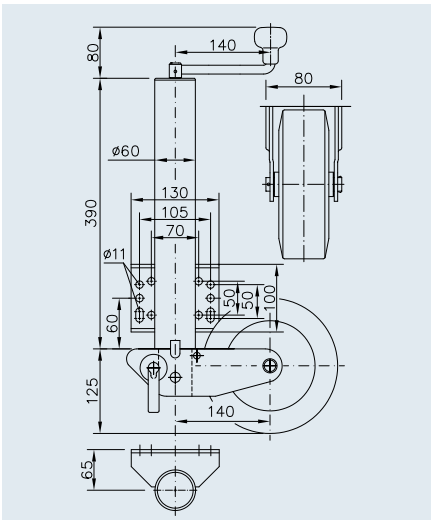

SAP: STÜTZRAD K 60-B-200 VB	
Jockey wheel K 60-B-200 VB	
Part no.	1860880 *(W 4040)*
Stationary nose load	Max. 250 kg
Nose load when manoeuvring	Max. 150 kg
Rim	steel
Wheel	200 x 50 solid rubber
Extended length	180 + 230 mm
	8.80 kg
	EWP 70 / GiBo 70
	12

JOCKEY WHEEL VK 60 SQUARE

with fully automatic support shoe, Ø 60 mm, max. 250 kg





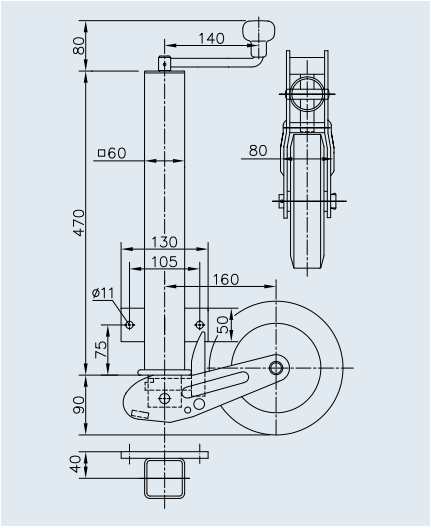

SAP: STÜTZRAD VK 60-P2H-200 VBB	
Jockey wheel VK 60-P2H-200 VBB	
Part no.	1860667 *(W 6404)*
Stationary nose load	Max. 250 kg
Nose load when manoeuvring	Max. 150 kg
Rim	steel
Wheel	200 x 60 solid rubber
Extended length	235 + 235 mm
	10.43 kg
	EWP 70 / GiBo 70
	12





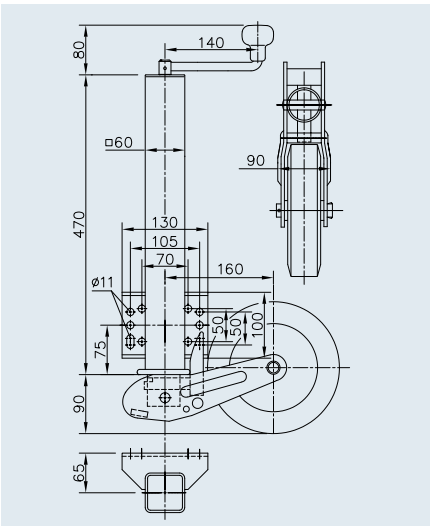

SAP: STÜTZRAD VK 60-PB1-200 VBB	
Jockey wheel VK 60-PB1-200 VBB	
Part no.	1860877 *(W 3861)*
Stationary nose load	Max. 250 kg
Nose load when manoeuvring	Max. 150 kg
Rim	steel
Wheel	200 x 60 solid rubber
Extended length	235 + 235 mm
	10.52 kg
	EWP 70 / GiBo 70
	12

JOCKEY WHEEL VK 60

with fully automatic support shoe, Ø 60 mm, max. 250 kg





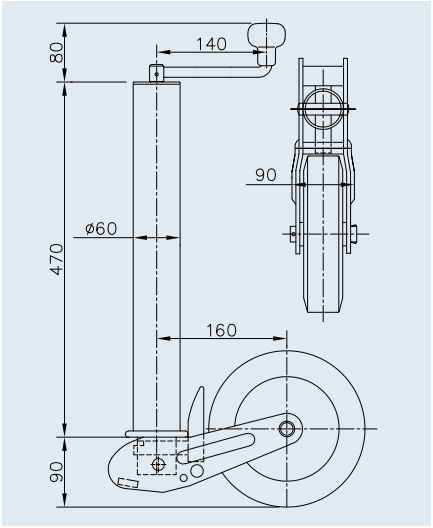

SAP: STÜTZRAD VK 60-200 VBB

Jockey wheel VK 60-200 VBB

Part no.	1860872 *(W 3820)*
Stationary nose load	Max. 250 kg
Nose load when manoeuvring	Max. 150 kg
Rim	steel
Wheel	200 x 60 solid rubber
Extended length	235 + 235 mm
	9.44 kg
	EWP 70 / GiBo 70
	12





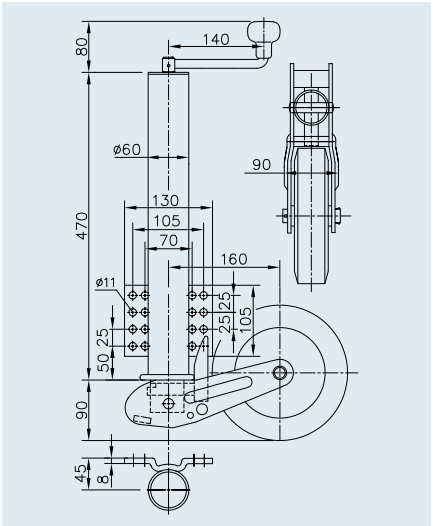

SAP: STÜTZRAD VK 60-KH-200 VBB

Jockey wheel VK 60-KH-200 VBB

Part no.	1860664 *(W 6400)*
Stationary nose load	Max. 250 kg
Nose load when manoeuvring	Max. 150 kg
Rim	steel
Wheel	200 x 60 solid rubber
Extended length	235 + 235 mm
	10.09 kg
	EWP 70 / GiBo 70
	12





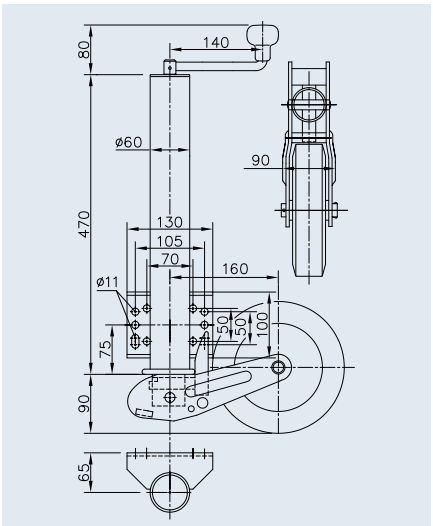

SAP: STÜTZRAD VK 60-BH-200 VBB

Jockey wheel VK 60-BH-200 VBB

Part no.	1860670 *(W 6410)*
Stationary nose load	Max. 250 kg
Nose load when manoeuvring	Max. 150 kg
Rim	steel
Wheel	200 x 60 solid rubber
Extended length	235 + 235 mm
	10.24 kg
	EWP 70 / GiBo 70
	12

JOCKEY WHEEL VK 60

with fully automatic support shoe, Ø 60 mm, max. 350 kg





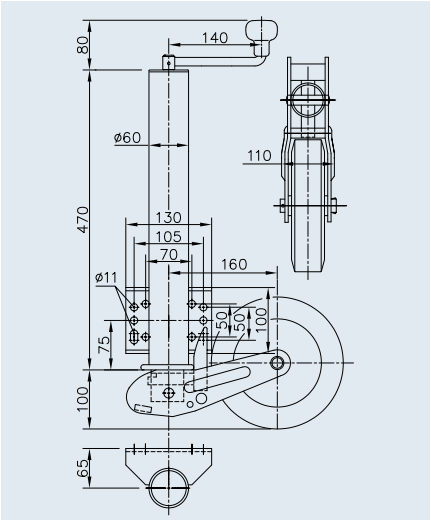

SAP: STÜTZRAD VK 60-BH-255 SB	
Jockey wheel VK 60-BH-255 SB	
Part no.	1860671 *(W 6412)*
Stationary nose load	Max. 350 kg
Nose load when manoeuvring	Max. 210 kg
Rim	steel
Wheel	225 x 70 solid rubber
Extended length	235 + 235 mm
	10.81 kg
	EWP 60 / GiBo 60
	12

JOCKEY WHEEL VK 60 – LONG VERSION

with fully automatic support shoe, Ø 60 mm, max. 400 – 500 kg





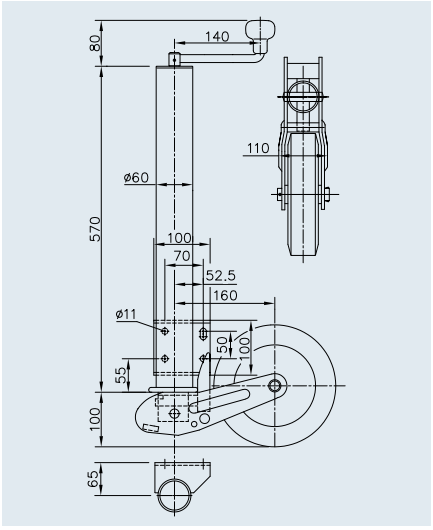

SAP: STÜTZRAD VK 60-ABLFH-255 SB

Jockey wheel VK 60-ABLFH-255 SB

Part no.	1860675 *(W 6420)*
Stationary nose load	Max. 400 kg
Nose load when manoeuvring	Max. 240 kg
Rim	steel
Wheel	225 x 70 solid rubber
Extended length	235 + 335 mm
	11.97 kg
	EWP 60 / GiBo 60
	12





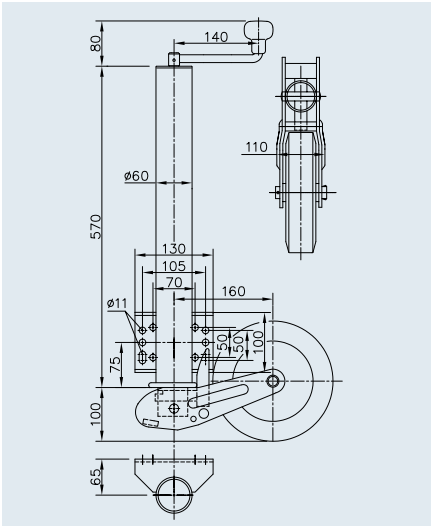

SAP: STÜTZRAD VK 60-BLH-255 SB

Jockey wheel VK 60-BLH-255 SB

Part no.	1860674 *(W 6415)*
Stationary nose load	Max. 500 kg
Nose load when manoeuvring	Max. 300 kg
Rim	steel
Wheel	225 x 70 solid rubber
Extended length	235 + 335 mm
	11.99 kg
	EWP 55 / GiBo 60
	12

JOCKEY WHEEL K 70

with semi-automatic support shoe, Ø 70 mm, max. 500 – 600 kg



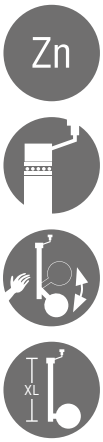

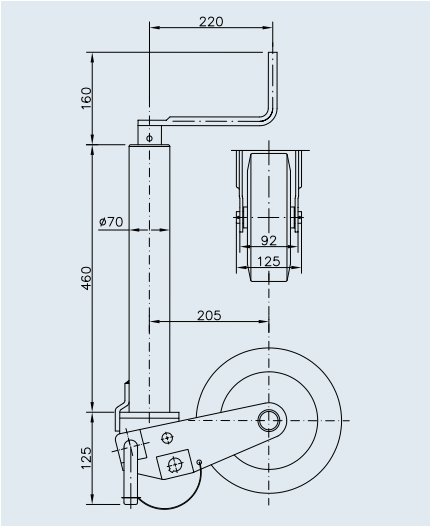

SAP: STÜTZRAD K 70-250 VBR	
Jockey wheel K 70-250 VBR	
Part no.	1860882 *(W 4050)*
Stationary nose load	Max. 500 kg
Nose load when manoeuvring	Max. 300 kg
Rim	steel
Wheel	250 x 60 solid rubber
Extended length	245 + 220 mm
	16.06 kg
	EWP 25 / GiBo 25
	12



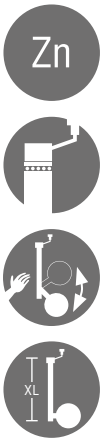

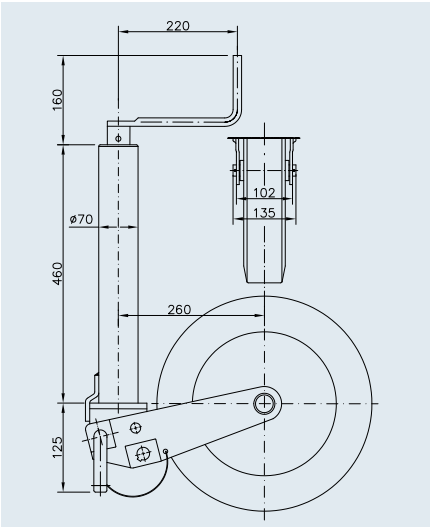

SAP: STÜTZRAD K 70-400 VBR	
Jockey wheel K 70-400 VBR	
Part no.	1860886 *(W 4058)*
Stationary nose load	Max. 600 kg
Nose load when manoeuvring	Max. 360 kg
Rim	steel
Wheel	400 x 75 solid rubber
Extended length	330 + 220 mm
	19.00 kg
	EWP 20 / GiBo 20
	12

JOCKEY WHEEL ST 70

Ø 70 mm, max. 900 kg





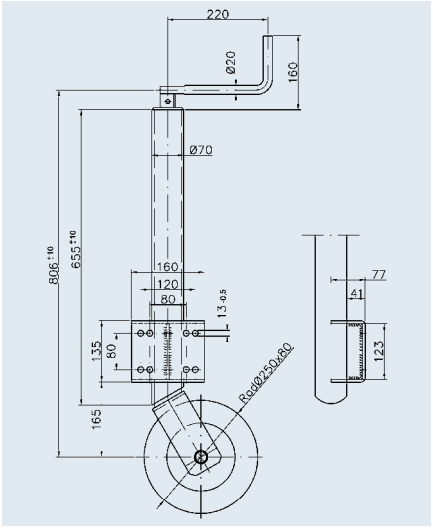

SAP: STÜTZRAD ST 70-L-250 VAR	
Jockey wheel ST 70-L-250 VAR	
Part no.	1860893 *(W 4072)*
Stationary nose load	Max. 900 kg
Nose load when manoeuvring	Max. 540 kg
Rim	steel
Wheel	250 x 80 solid rubber
Extended length	370 mm
	18.50 kg
	EWP 25 / GiBo 25
	12

ACCESSORIES FOR JOCKEY WHEELS

Clamp bracket, Ø 35 mm, max. 75 kg

Zn



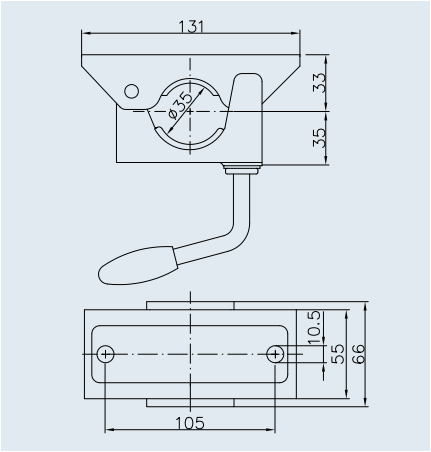

SAP: KLEMMSCHELLE KLE 35	
Bracket KLE 35	
Part no.	1860640 *(W 1810)*
Stationary nose load	Max. 75 kg
Base plate	steel
Connection	2-hole
	0.76 kg
	EWP 1,000 / GiBo 1,000
	12

Clamp bracket, Ø 48 mm, max. 250 kg

Zn



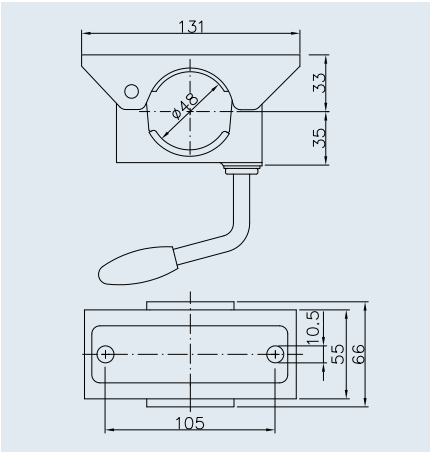

SAP: KLEMMSCHELLE KLE 48	
Bracket KLE 48	
Part no.	1860644 *(W 1819)*
Stationary nose load	Max. 250 kg
Base plate	steel
Connection	2-hole
	0.76 kg
	EWP 1,000 / GiBo 1,000
	12

Zn



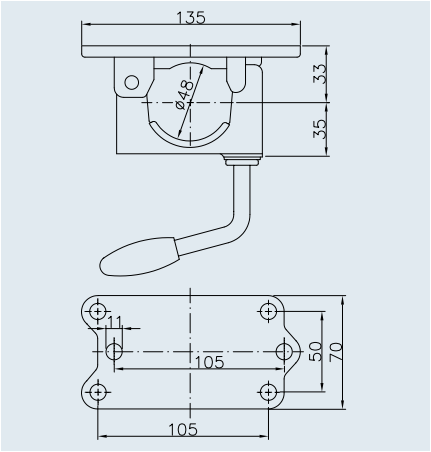

SAP: KLEMMSCHELLE KLE 48-G	
Bracket KLE 48-G	
Part no.	1860656 *(W 1844)*
Stationary nose load	Max. 250 kg
Base plate	cast-iron
Connection	6-hole
	0.82 kg
	EWP 1,000 / GiBo 1,000
	12

ACCESSORIES FOR JOCKEY WHEELS

Clamp bracket, Ø 48 mm, max. 250 kg



Zn

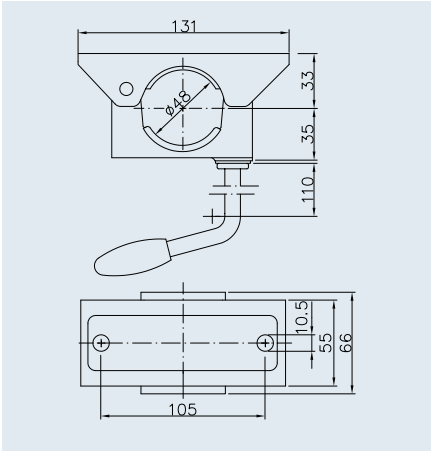

SAP: KLEMMSCHELLE KLE 48-LK	
Bracket KLE 48-LK	
Part no.	1860649 *(W 1833)*
Stationary nose load	Max. 250 kg
Base plate	steel
Connection	2-hole
	0.81 kg
	EWP 1,000 / GiBo 1,000
	12



Zn

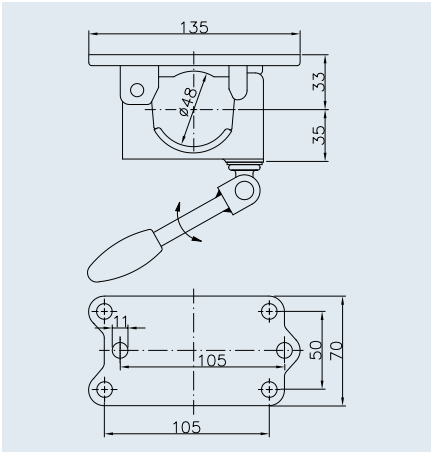

SAP: KLEMMSCHELLE KLE 48-GKK	
Bracket KLE 48-GKK	
Part no.	1860657 *(W 1845)*
Stationary nose load	Max. 250 kg
Base plate	cast-iron
Connection	6-hole
	0.90 kg
	EWP 750 / GiBo 750
	12



Zn

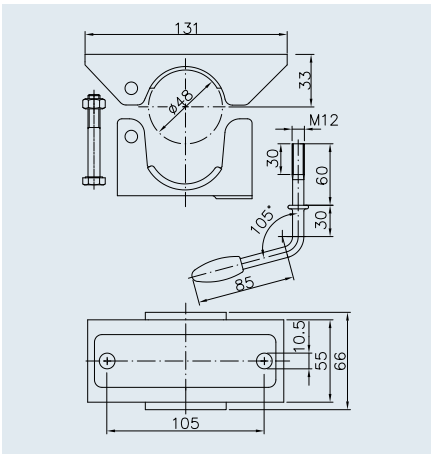

SAP: KLEMMSCHELLE KLE 48-R	
Bracket KLE 48-R	
Part no.	1860646 *(W 1822)*
Stationary nose load	Max. 250 kg
Base plate	Steel, crude
Connection	2-hole
	0.64 kg
	–
	12

ACCESSORIES FOR CLAMP BRACKETS

Ø 48 mm, max. 250 kg



Zn

KBF 60/70

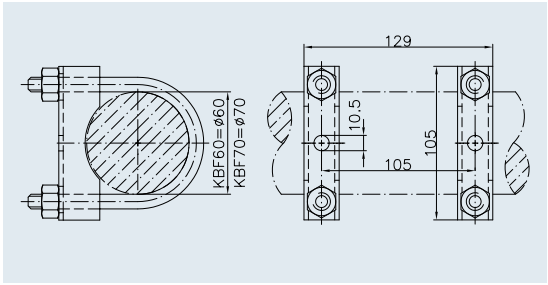



SAP: KLEMMHALTERBEFESTIGUNG KBF 60 RUND	
Binder support KBF 60 ROUND	
Part no.	1860688 *(W 1910)*
Stationary nose load	Max. 250 kg
	0.71 kg
	EWP 2,000 / GiBo 2,000
	12

SAP: KLEMMHALTERBEFESTIGUNG KBF 70 RUND	
Binder support KBF 70 ROUND	
Part no.	1860690 *(W 1912)*
Stationary nose load	Max. 250 kg
	0.71 kg
	EWP 2,000 / GiBo 2,000
	12



Zn

KBFV 60/70

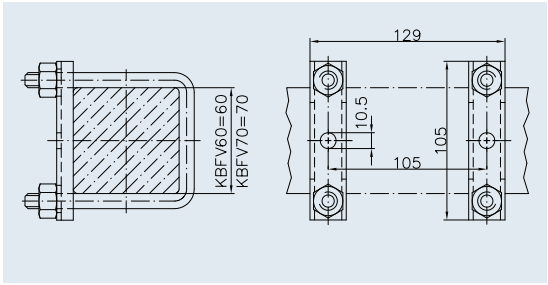



SAP: KLEMMHALTERBEFESTIGUNG KBFV 60 VIERK	
Binder support KBFV 60	
Part no.	1860689 *(W 1911)*
Stationary nose load	Max. 250 kg
	0.55 kg
	EWP 2,000 / GiBo 2,000
	12

SAP: KLEMMHALTERBEFESTIGUNG KBFV 70 VIERK	
Binder support KBFV 70	
Part no.	1860691 *(W 1914)*
Stationary nose load	Max. 250 kg
	0.55 kg
	EWP 2,000 / GiBo 2,000
	12

Securing system

Blocking system BS-KLE 48
secures jockey wheel ST 48 while driving.







SAP: VERLIERSICHERUNG STÜTZRAD 48MM	
Securing system BS-KLE 48	
Part no.	1860693 *(W 1950)*
	0.13 kg
	EWP 1,000 / GiBo 1,000
	12

ACCESSORIES FOR JOCKEY WHEELS

Clamp bracket, Ø 60 mm, max. 500 kg



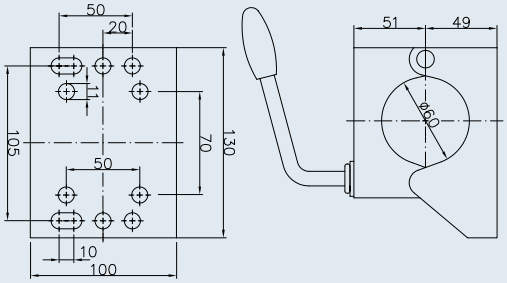

SAP: KLEMMSCHELLE KLE 60	
Bracket KLE 60	
Part no.	1861428 *(W 3640)*
Stationary nose load	Max. 500 kg
Base plate	steel
Connection	10-hole
	1.56 kg
	EWP 200 / GiBo 200
	12



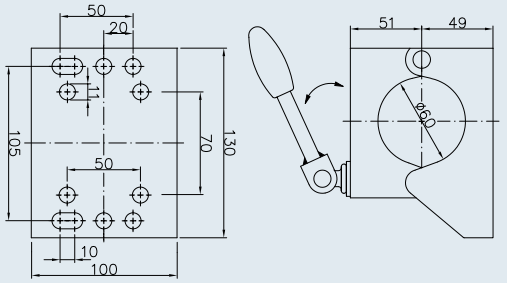

SAP: KLEMMSCHELLE KLE 60-KK	
Bracket KLE 60-KK	
Part no.	1861429 *(W 3643)*
Stationary nose load	Max. 500 kg
Base plate	steel
Connection	10-hole
	1.57 kg
	EWP 200 / GiBo 200
	12

Fastening for outside tube Ø 70 mm



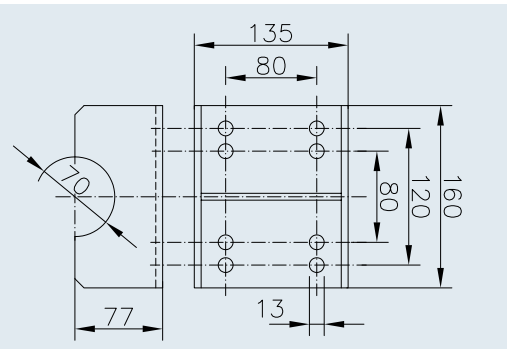

SAP: KLE 70 STEG GESCHW ROH	
Bracket KLE 70	
Part no.	1860694 *(W 3650)*
Base plate	steel
Connection	8-hole
	3.26 kg
	EWP 150 / GiBo 150
	12



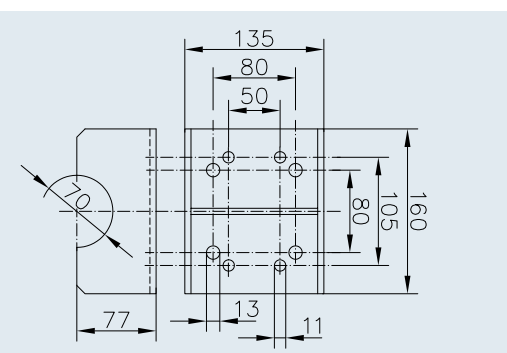

SAP: Klemmhalter KLE 70-105x50	
Bracket KLE 70-105x50	
Part no.	1861028 *(W 3655)*
Base plate	steel
Connection	8-hole
	3.26 kg
	EWP 150 / GiBo 150
	12

ACCESSORIES FOR JOCKEY WHEELS

Spare wheels



SAP: RAD 160 V	
Wheel 160 V	
Part no.	1860592 *(W 5410)*
Wheel	160 x 40 mm, rubber
Rim	Plastic
Hub	Diam. 20 x 58 mm
Load when parked	75 kg
	0.35 kg
	EWP 525 / GiBo 525
	12



SAP: RAD 200X 50 VOLLGM 200FK	
Wheel 200 V	
Part no.	294364 *(W 5420)*
Wheel	200 x 50 mm, solid rubber
Rim	Plastic
Hub	Diam. 20 x 58 mm
Load when parked	200 kg
	1.26 kg
	EWP 630 / GiBo 500
	12



SAP: RAD 200 VB 200X 50 VOLLGM	
Wheel 200 VB	
Part no.	294365 *(W 5422)*
Wheel	200 x 50 mm, solid rubber
Rim	steel
Hub	Diam. 20 x 58 mm
Load when parked	200 kg
	1.45 kg
	EWP 500 / GiBo 500
	12



SAP: RAD 200 VBB	
Wheel 200 VBB	
Part no.	1860506 *(W 5424)*
Wheel	200 x 60 mm, solid rubber
Rim	steel
Hub	Diam. 20 x 58 mm
Load when parked	250 kg
	1.77 kg
	EWP 500 / GiBo 400
	12



SAP: RAD 255 S 225X 70 VOLLGM	
Wheel 255 S	
Part no.	1223374 *(W 5450)*
Wheel	225 x 70 mm, solid rubber
Rim	Plastic
Hub	Diam. 20 x 88 mm
Load when parked	250 kg
	1.93 kg
	EWP 200 / GiBo 200
	12



SAP: RAD 255 SB 225X 70 VOLLGM ST-FELGE	
Wheel 255 SB	
Part no.	1223522 *(W 5452)*
Wheel	225 x 70 mm, solid rubber
Rim	steel
Hub	Diam. 20 x 88 mm
Load when parked	400 kg
	2.23 kg
	EWP 200 / GiBo 200
	12



SAP: RAD 215X 65 KUNSTSTOFF	
Wheel 240 S	
Part no.	1211567 *(W 5446)*
Wheel	215 x 70 mm, rubber
Rim	Plastic
Hub	Diam. 20 x 88 mm
Load when parked	150 kg
	0.91 kg
	EWP 200 / GiBo 200
	12



SAP: RAD 260 L	
Wheel 260 L	
Part no.	1860513 *(W 5430)*
Wheel	260 x 85 mm, air
Rim	Plastic
Hub	Diam. 20 x 88 mm
Load when parked	200 kg
	0.93 kg
	EWP 130 / GiBo 130
	12



SAP: RAD 260 LB	
Wheel 260 LB	
Part no.	1860594 *(W 5432)*
Wheel	260 x 85 mm, air
Rim	steel
Hub	Diam. 20 x 88 mm
Load when parked	200 kg
	1.18 kg
	EWP 110 / GiBo 130
	12



SAP: RAD 255 VB	
Wheel 255 VB	
Part no.	1860512 *(W 5473)*
Wheel	255 x 80 mm, solid rubber
Rim	steel
Hub	Diam. 20 x 88 mm
Load when parked	500 kg
	3.81 kg
	EWP 180 / GiBo 180
	12



SAP: RAD 250 VBR	
Wheel 250 VBR	
Part no.	1860509 *(W 5472)*
Wheel	250 x 60 mm, solid rubber
Rim	steel
Hub	Diam. 25 x 75 mm
Load when parked	400 kg
	3.51 kg
	EWP 150 / GiBo 150
	12



SAP: RAD 400 VBR	
Wheel 400 VBR	
Part no.	1860518 *(W 5480)*
Wheel	400 x 60 mm, solid rubber
Rim	steel
Hub	Diam. 25 x 88 mm
Load when parked	500 kg
	7.50 kg
	EWP 50 / GiBo 50
	12

9

Spare parts for jockey wheels ST, K and VK





SAP: PREMIUM-CAP WW SCHWARZ	
Crank cover PREMIUM CAP	
Part no.	1860473 *(W 6350)*
suitable for	ST 60, ST 60-V, K 60, VK 60
	0.04 kg
	–
	12

10. STEADY LEGS AND EXTENDABLE CORNER STEADIES



STEADY LEGS AND EXTENDABLE CORNER STEADIES

Product differentiation 462

AL-KO steady legs / extendable corner steadies

Steady legs, rigid 463

Steady legs, spindle 464

Steady legs, pivoting 465 – 467

Corner steadies, mechanical 468 – 471

Corner steadies, electric 472 – 473

Extendable corner steadies 474

Accessories 475 – 479

Winterhoff steady legs / extendable corner steadies

Steady legs, rigid 480

Steady legs, pivoting 481 – 483

Extending supports 484

Accessories 485

STEADY LEGS AND EXTENDABLE CORNER STEADIES

Product differentiation

Steadies are used in diverse areas

You're spoiled for choice with our extensive range of products and features. To make the choice easier, the following symbols specify product group, additional uses and product characteristics.



Long design
More adjustment range



Electrogalvanised
Standard corrosion protection



Hot-dip galvanised
High-quality corrosion protection



Push-on crank
Operation with hexagon



Top crank
Operation with top crank



Side crank
Operation with side crank



Pivoting
Pivoting to save space



Electrically pivoting
via radio remote control



Height adjustment
Additional height adjustment possible by hand

BASIC PRODUCT LINE

The **BASIC** products are entirely solid and robust. They are characterised by very good processing properties for the respective area of use, and are essential in day-to-day trailer use, as they fulfil the basic needs of the trailer users.

We ensure that these Basic variants also meet our high quality standards and exceed the legal minimum requirements.

PLUS PRODUCT LINE

The products from the **PLUS** category boast high quality of finishing, reliability, high-quality materials and longevity. Their high level of stability and smart technical details fulfil the high requirements in the day-to-day use of trailers.

All products have extended functions and are nevertheless user-friendly and have an attractive design.

PREMIUM PROFI PRODUCT LINE

PREMIUM PROFI products are characterised by trail-blazing design, sophisticated functions and top quality. They are innovative and traditional products for the highest demands and challenging areas of application. They are the gold standard in terms of processing, material and design. Their longevity ensures that you will have many years of joy with these products.

STEADY LEGS, RIGID

Max. 200 – 400 kg

YOUR ADVANTAGE

- Wherever anything needs to be lifted, secured or stabilised, AL-KO support legs have successfully delivered the solution for more than 50 years.
- AL-KO support legs have proven their effectiveness hundreds of thousands of times over. Thick-walled steel tubes mean we achieve an extremely sturdy and functionally reliable design.
- These steadies can also be used in a variety of applications to improve stability, e.g. on lifting platforms, forest cabins, compressors, standby generators, car trailers and horse boxes.

SCOPE OF SUPPLY

- Loose steady leg



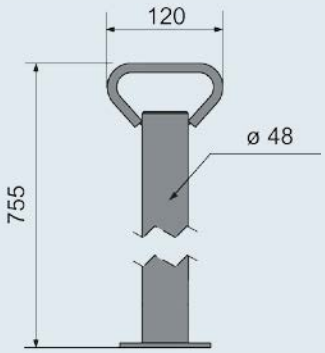

SAP: STUETZE GKLMT STARR 200 FEUVZ	
Rigid steady leg Ø 48	
Part no.	205 617
Stationary nose load	Max. 200 kg
	4.0 kg
	– 200 units



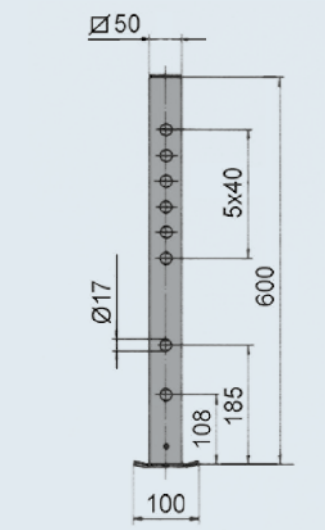

SAP: STUETZE ARRET STARR 400	
Rigid steady leg ⍁ 50	
Part no.	205 702
Stationary nose load	Max. 400 kg
	3.0 kg
	– 150 units

STEADY LEGS, SPINDLE

Max. 400 – 800 kg





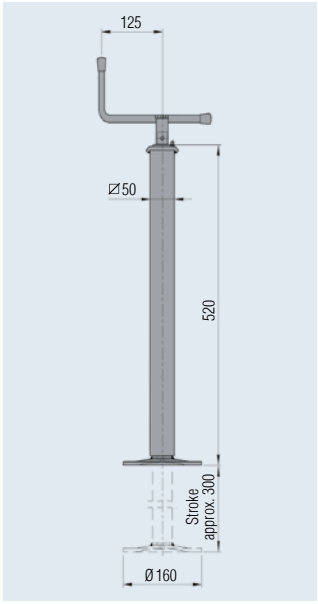

SAP: STUETZE SPNDL 500

Steady leg, spindle ⍁ 50

Part no.	1 224 015
Stationary nose load	Max. 500 kg
Surface treatment	primed
	6.5 kg
	– 100 units





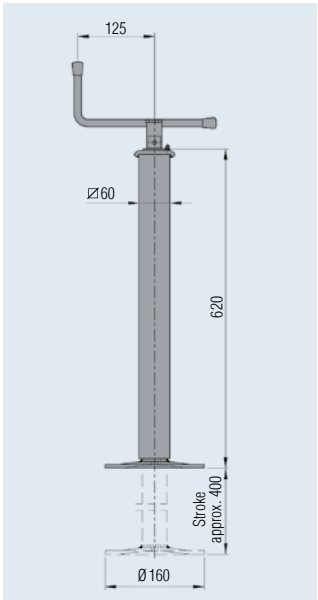

SAP: STUETZE SPNDL 800

Steady leg, spindle ⍁ 60

Part no.	1 224 016
Stationary nose load	Max. 800 kg
Surface treatment	primed
	9.1 kg
	– 80 units





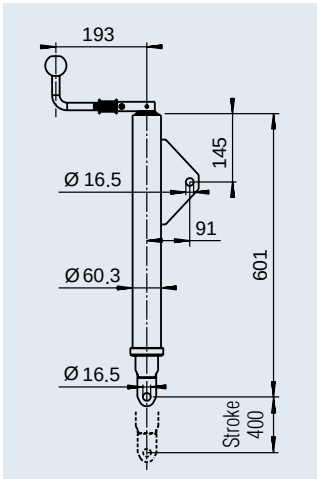

SAP: SCHURRENSTUETZE HANDGRIFF KLAPP

Chute support Ø 60.3

For supporting chutes on concrete mixer vehicles

Part no.	205 807
Stationary nose load	Max. 400 kg
Surface treatment	Black primed, powder-coated
	8.0 kg
	– 50 units

STEADY LEGS, PIVOTING

Max. 500 kg











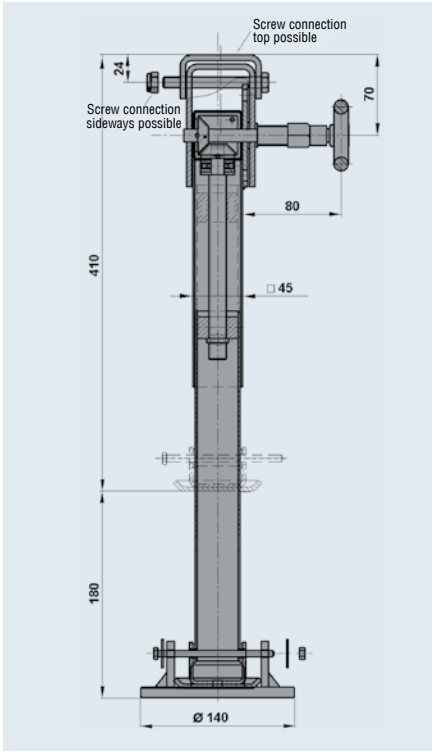

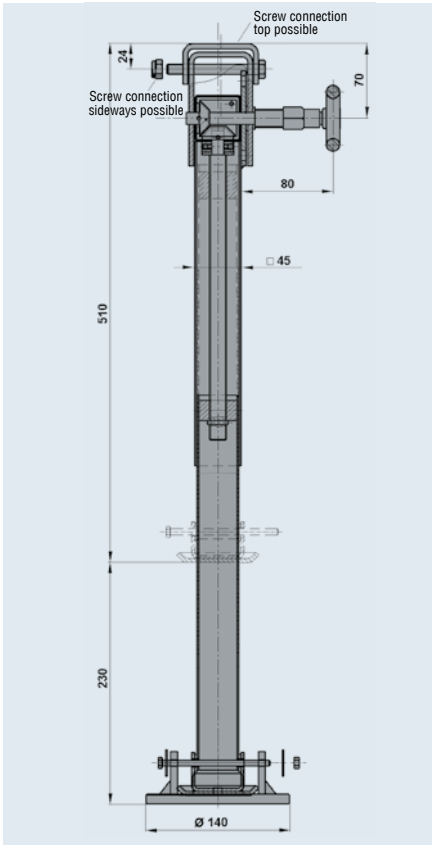

SAP: STÜTZFUSS SCHWENK 410/590 500KG

Steady leg, spindle ⍁ 45, pivoting sideways (steps of 6 x 30°)

Part no.	1 224 068
Stationary nose load	Max. 500 kg
	5.0 kg
	– –

APPLICATIONS

High-loader bottom installation:
Necessary ground clearance 450 – 500 mm

Low-loader outside on the side:
With two M10 bolts (hole distance 80 mm) screwed on at either the side or top

SAP: STÜTZFUSS SCHWENK 510/740 500KG

Steady leg, spindle ⍁ 45, pivoting sideways (steps of 6 x 30°)

Part no.	1 224 069
Stationary nose load	Max. 500 kg
	5.4 kg
	– –

APPLICATIONS

High-loader bottom installation:
Necessary ground clearance 550 – 650 mm

Low-loader outside on the side:
With two M10 bolts (hole distance 80 mm) screwed on at either the side or top

STEADY LEGS, PIVOTING

Max. 1,000 kg





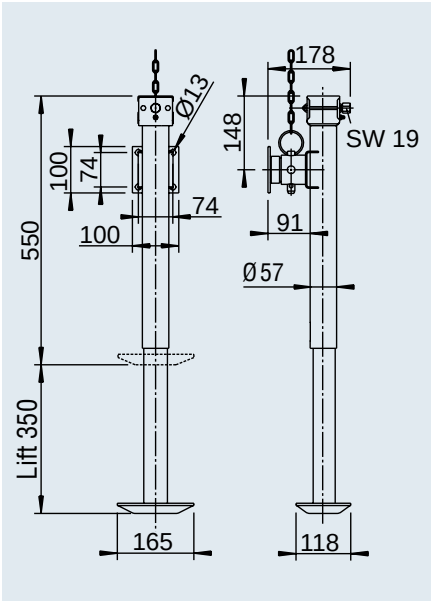

SAP: STÜTZFUSS SPNDL RD57 OHNE KURBEL

Steady leg, spindle Ø 57 with hexagon AF 19, pivoting 90° sideways

Part no.	1 368 312
Stationary nose load	Max. 1,000 kg
	7.6 kg
	– 45 units





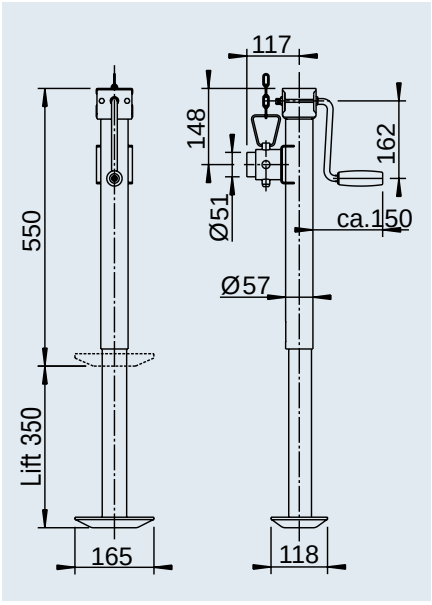

SAP: STÜTZFUSS SPNDL RD57

Steady leg, spindle Ø 57, pivoting 90° sideways

Part no.	1 223 190
Stationary nose load	Max. 1,000 kg
	7.6 kg
	– 40 units

STEADY LEGS, PIVOTING

Max. 1,000 kg

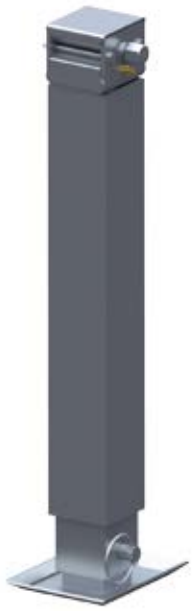



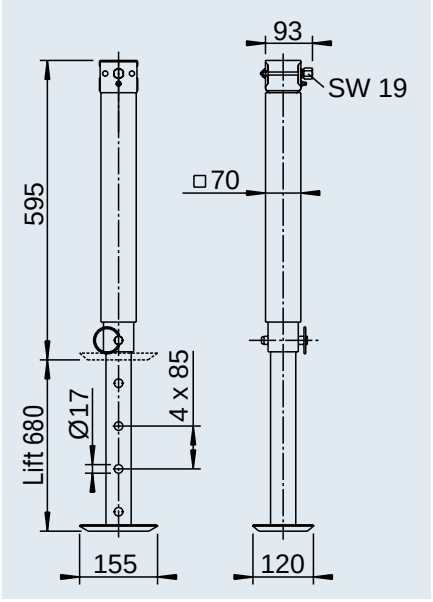

SAP: STÜTZFUSS SPNDL VKT70 OHNE KURBEL

Steady leg, spindle ⍁ 70, with hexagon AF 19

Part no.	1 368 313
Stationary nose load	Max. 1,000 kg
	12.0 kg
	– 50 units





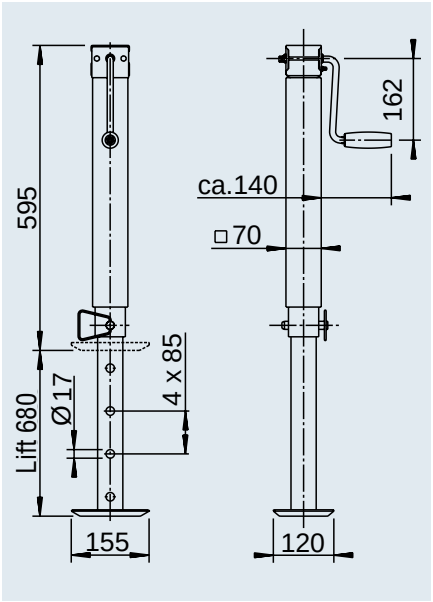

SAP: STÜTZFUSS SPNDL VKT70

Steady leg, spindle ⍁ 70

Part no.	1 223 191
Stationary nose load	Max. 1,000 kg
	12.0 kg
	– 50 units

CORNER STEADIES, MECHANICAL

Advantages / fitting / operation

YOUR ADVANTAGE

Easy to install
Mounting brackets provided on the chassis enable quick and easy mounting of the AL-KO corner steadies. One end is plugged in, the other end is attached to the caravan floor using two bolts.

Stable
AL-KO corner steadies are particularly stable because they are pressed sections with side bracings and strong, rolled trapezoidal threaded spindles.

High-quality corrosion protection
The hot-dip galvanisation with high coat thickness of up to 70 µm means that the corner steadies are virtually indestructible.

MOUNTING

Retrofitting on other chassis:
The AL-KO Stabilform steady can also be retrofitted to other chassis.
Please talk to your specialist workshop or call us so we can clarify your specific installation conditions and handle the mounting for you if necessary.
Depending on the installation situation, special mounting rails, part no. 294 370 per unit, or holding links, part no. 365 100 per unit, can be used for this application.



AL-KO Stabilform or Premium corner steadies can be retrofitted on all caravans with AL-KO chassis.

To make sure, however, the installation conditions stated below must be checked on your trailer.

1. Check mounting dimension A as shown in the diagram.
   If the dimension is 605 mm, the Stabilform steady will fit. With dimension A 505 mm, it **cannot** be retrofitted.
2. Check extension height dimension K as shown in the diagram. If the dimension is 23 mm, the Stabilform steady will fit. With dimension K 30, it **cannot** be retrofitted.

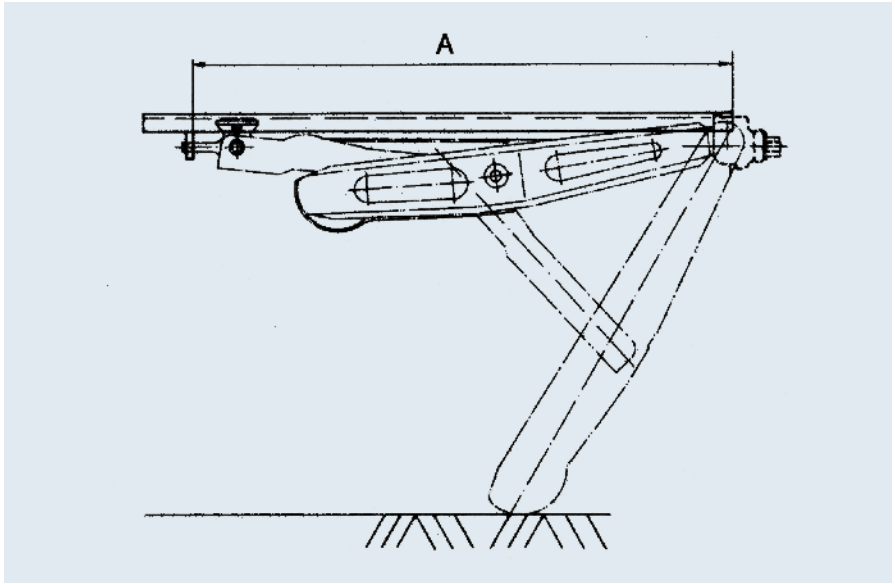

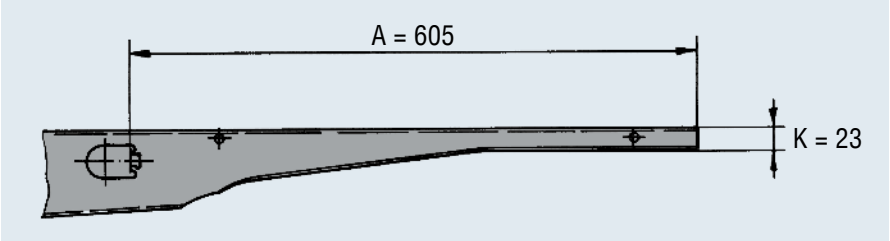

RETROFITTING

on the AL-KO system chassis:
To ensure a secure stance even in extreme situations, we recommend retrofitting the Premium steadies, thus increasing the load capacity by 25%.

Operation

The steady is wound up or down easily using a push-on crank (without additional locking or releasing).

Generally speaking, steadies are only provided for supporting the trailer. They must not be used as a jack for changing tyres, etc.

The threaded spindle must be cleaned and greased regularly.



AL-KO corner steadies achieve their maximum load capacity from a positioning angle of 45° onwards. If the corner steady is positioned at a very flat angle (e.g. 30°), the load capacity will be reduced *(see diagram)*.

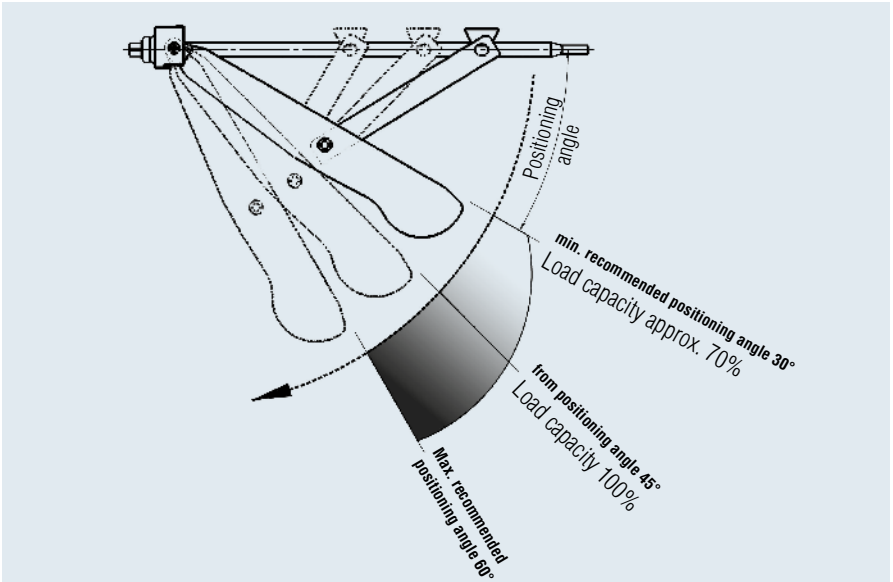

CORNER STEADIES

Max. 800 – 1,000 kg



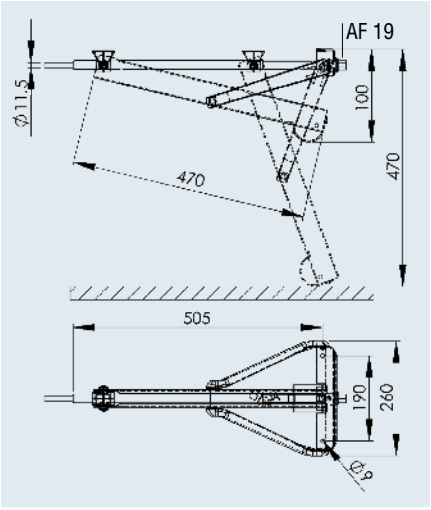

SAP: STÜTZE SPNDL KLAPP 800	
Corner steady 800 kg short	
Part no.	205 808
Stationary nose load	Max. 800 kg
Perm. gross weight* of the trailer (recommendation)	max. 1,600 kg
	3.4 kg
	– 100 units



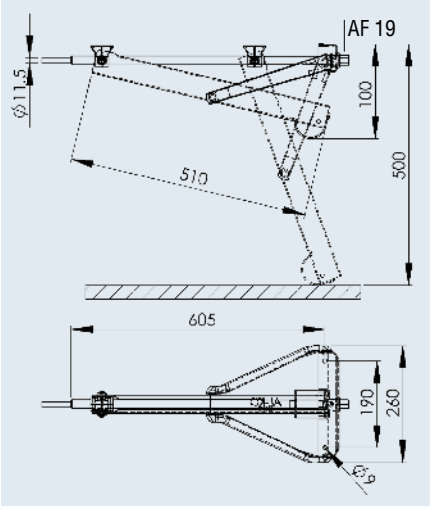

SAP: STÜTZE SPNDL KLAPP 800	
Corner steady 800 kg long	
Part no.	205 817
Stationary nose load	Max. 800 kg
Perm. gross weight* of the trailer (recommendation)	Max. 1,600 kg
	4.2 kg
	– 100 units

*The permitted gross weight assumes that 4 steadies are used

CORNER STEADIES

Max. 800 – 1,000 kg



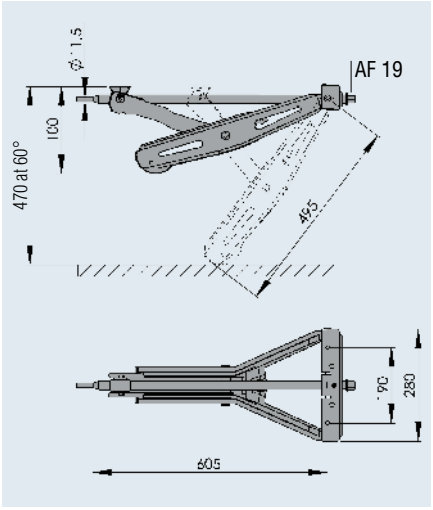

SAP: STUETZE SPNDL - LEICHTBAU STECKBAR	
Corner steady 1,000 kg short	
Part no.	267 265
Stationary nose load	Max. 1,000 kg
Perm. gross weight* of the trailer (recommendation)	Max. 2,000 kg
	4.2 kg
	– 70 units

CORNER STEADIES

Max. 1,250 kg



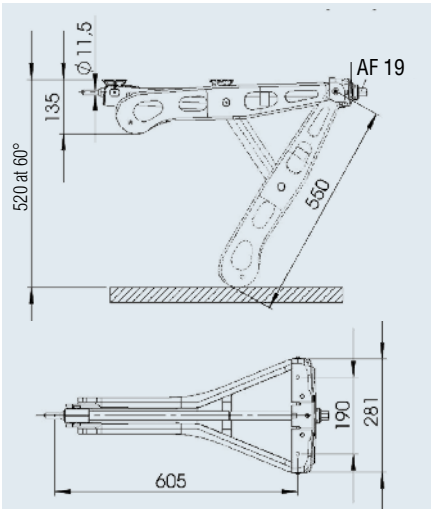

SAP: STUETZE SPNDL - LEICHTBAU PREMIUM	
Premium corner steadies 1,250 kg long	
Part no.	1 221 694
Stationary nose load	Max. 1,250 kg
Perm. gross weight* of the trailer (recommendation)	Max. 2,500 kg
	4.95 kg
	– 50 units

ELECTRONIC CORNER STEADY SYSTEM

UP4

DEVELOPED FOR CAMPING TODAY!

With UP4 from AL-KO, you raise the legs of your caravan and adjust them precisely by remote control. It was never so quick, easy and safe.
UP4 is more than just a further technical accessory.

It upgrades your holiday because you spare your back and nerves and can start to relax as soon as you arrive at the camp site. Your neighbours will envy you!

- **One step faster**
  No matter how fast you can crank: The UP4 electronic support system does it faster. And more conveniently.
- **One step more comfortable**
  Lower and adjust the steadies simply by remote control. Spares your back. And your nerves.
- **One step more stable**
  With UP4, you compensate unevenness electrically and the big foot™ is already included. For secure standing and greater stability whatever the ground.
- **One step more intelligent**
  Combine the UP4 with the RANGER: Elegant parking and manoeuvring in future with just one remote control.



AN EVOLUTIONARY STEP AHEAD

UP4, the new electronic support system for caravans up to 2.5 t is carefully designed right down to the last detail. And the best of all: UP4 can be retrofitted on your AL-KO CHASSIS at any time.



COMBINATION REMOTE CONTROL FOR UP4 AND RANGER



10

SAP: ELEKTRISCHES STÜTZENSYSTEM ESS1	
UP4	
Part no.	1 731 376
Power supply	12 Volt DC
Average current consumption	6 amps
Maximum current consumption	24 amps
Support power source (battery)	12 V, 20 Ah (min.)
Remote control power source (battery)	PP3 9V
Remote control transmitter frequency	868 MHz
Min. permissible gross weight of the caravan	800 kg
Max. permissible gross weight of the caravan	2,500 kg
Additional weight	Approx. 17.5 kg System weight approx. 40 kg (without battery)
	– –

One step safer!
Extended at just the push of a button and thus ideally protected against theft. A special adapter prevents unauthorised manual resetting.

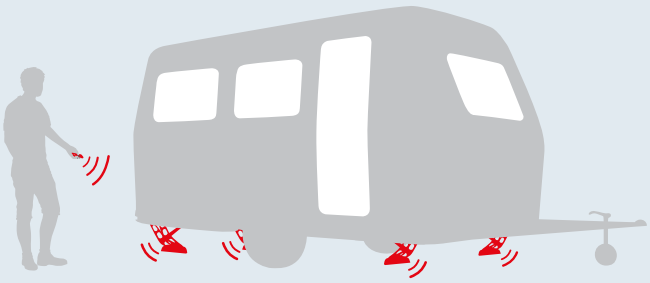

EXTENDABLE CORNER STEADIES WITH SWIVEL FOOT

for trailers without system chassis

YOUR ADVANTAGE

Mounting brackets provided on the chassis enable quick and easy mounting of the AL-KO corner steadies. One end is plugged in, the other end is attached to the caravan floor using two bolts.

SURFACE TREATMENT

Galvanised

MOUNTING

The extendable corner steadies should be mounted towards the rear and the outside as far as possible. This increases the stability of your trailer. We recommend bolting the extendable corner steadies onto the frame. If mounting on a sandwich floor (wooden floor) – without storage space – it is essential to make sure that the screw connection passes through solid wood. The bolt head must be provided with a large washer Ø 50 x 4mm (plate).
The best stability can be achieved if the 4 extendable corner steadies are fitted at an angle of about 30-45°.



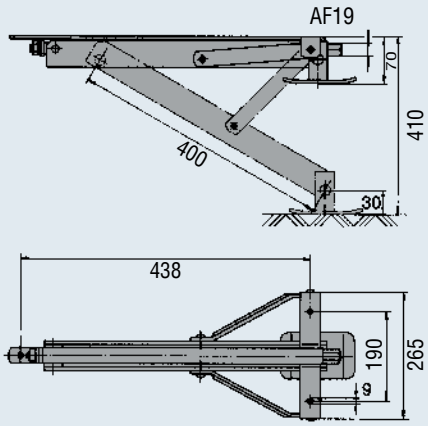

SAP: STÜTZE SPNDL KLAPP 500	
COMPACT corner steady load capacity 800 kg	
Part no.	205 712
Stationary nose load	Max. 500 kg
Perm. gross weight* of the trailer (recommendation)	max. 1,000 kg
	3.0 kg
	– 150 units

Zn

For front right and rear left



Part no. 205 713 + 205 714

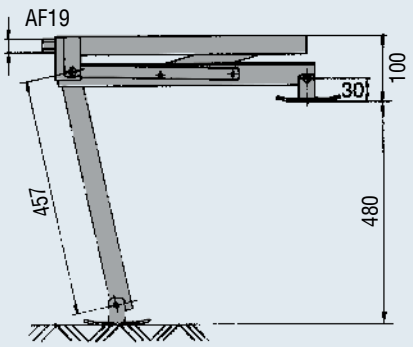

SAP: STÜTZE SPNDL KLAPP 600	
COMPACT corner steady load capacity 800 kg	
Part no.	205 713
Stationary nose load	Max. 600 kg
Perm. gross weight* of the trailer (recommendation)	Max. 1,200 kg
	4.5 kg
	– 80 units

For front left and rear right



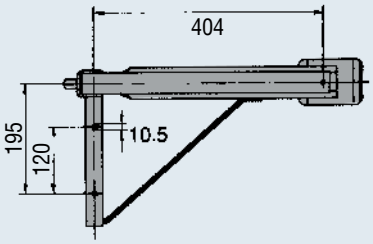

SAP: STÜTZE SPNDL KLAPP 600	
COMPACT corner steady load capacity 800 kg	
Part no.	205 714
Stationary nose load	Max. 600 kg
Perm. gross weight* of the trailer (recommendation)	Max. 1,200 kg
	4.5 kg
	– 80 units

Zn

*The permitted gross weight assumes that 4 steadies are used

COMFORT KIT

The clever trick for lowering steadies

YOUR ADVANTAGE

- On request as standard equipment or can be retrofitted to caravans with AL-KO chassis.
- **No bending down**
  The AL-KO Comfort Kit makes it possible to operate the steadies whilst standing upright, using a universal joint.
- **No kneeling down**
  The universal joint holder, i.e. the plastic guide tube, is clearly visible. No need to kneel down to search for the hexagonal mount, no need to kneel down when operating the steadies using the crank.



MOUNTING

The mounting area for the plastic section on the ground must be free, i.e. without any cables or other components. On vehicles with a skirt, a hole must be provided in the skirt. The 4 plastic sections are sawn off to the required length, and then secured to the floor using wood screws in order to guide the crank.

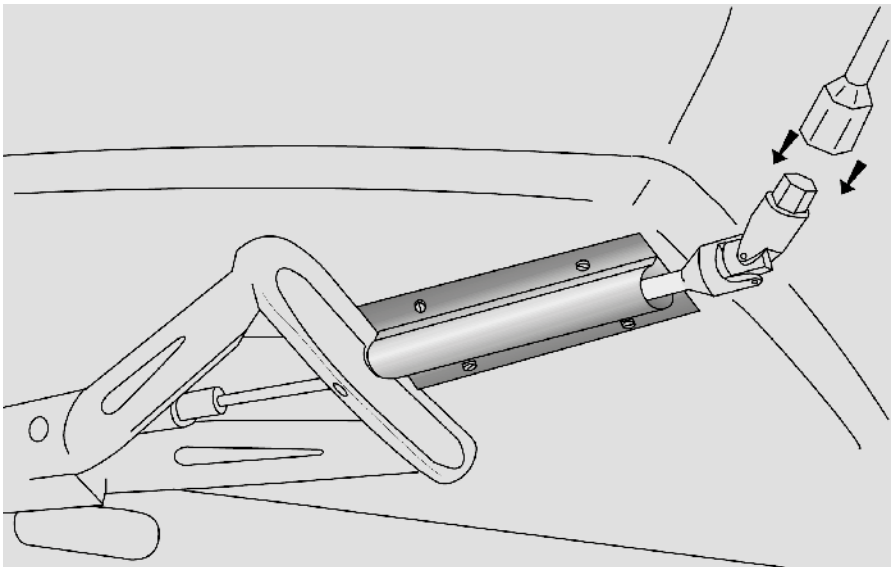

SCOPE OF SUPPLY

- 2 plastic sections, 400 mm long
- 2 plastic sections, 200 mm long
- 1 universal joint, long
- 1 universal joint, short
- 1 installation manual



SAP: KOMFORTKIT STÜTZE	
Comfort Kit	
Part no.	1 210 506
Suitable for	All extendable corner steadies with hexagon AF 19
	2.3 kg
	– 100 units

BIG FOOT™ SUPPORT

Prevents corner steadies from sinking in or sliding

YOUR ADVANTAGE

Secure stance
With the large standing area (200x180 mm) and cross ribs, the AL-KO big foot™ prevents the steadies from sliding away or sinking in, ensuring that the caravan will stand in an absolutely secure position. The support foot has a load capacity of maximum 1,250 kg static.

Functional
The long slot allows the steady to slide directly onto the AL-KO big foot™ when it makes contact with the ground; this means the steady does not have to push the support foot as well.

Compact design
During towing, the AL-KO big foot™ is held positively against the steady by spring force.

Can be retrofitted to caravans with AL-KO chassis and Stabilform steady.


Retracted


Engaged on flat


Engaged on slope

SCOPE OF SUPPLY

Packed in a cardboard box with the following content:

4 x AL-KO big foot™ with
- Fastening spindles
- Washers
- Springs and nuts
- 1 set of mounting and operating instructions

EU patent
EP 1174 317 B1

MOUNTING

The big foot™ is mounted on the AL-KO "Stabilform" and "Premium" corner steadies. From year of manufacture 2001 the corresponding mounting holes are already provided on the Stabilform steadies.

Up to year of manufacture 2000, the mounting holes must be drilled according to the operating instructions.





SAP: BIG-FOOT KPL IM KARTON	
big foot™ support	
Part no. (content 4 units)	1 212 458
Suitable for	Stabilform steadies and Premium corner steadies
Surface treatment	Plastic PA grey
	2.5 kg per set
	– 48 units (cardboard box)

ADAPTER 45 MM

For big foot™ support

YOUR ADVANTAGE

Additional 45 mm height for the AL-KO Stabilform and Premium corner steadies.

SCOPE OF SUPPLY

Packed in a cardboard box with the following content:

- 4 adapters 45 mm
- 4 sets of fastening material on the steady
- 1 installation manual

MOUNTING

The adapter means the AL-KO big foot™ is moved 45 mm closer to the ground.
To prevent the AL-KO big foot™ from making contact with the ground, the specific vehicle must be inspected to ensure there is still sufficient ground clearance. From year of manufacture 2001 onwards, the corresponding mounting holes are already provided on AL-KO Stabilform steadies and AL-KO Premium corner steadies. Up to year of manufacture 2000, the mounting holes must be drilled according to the operating instructions.

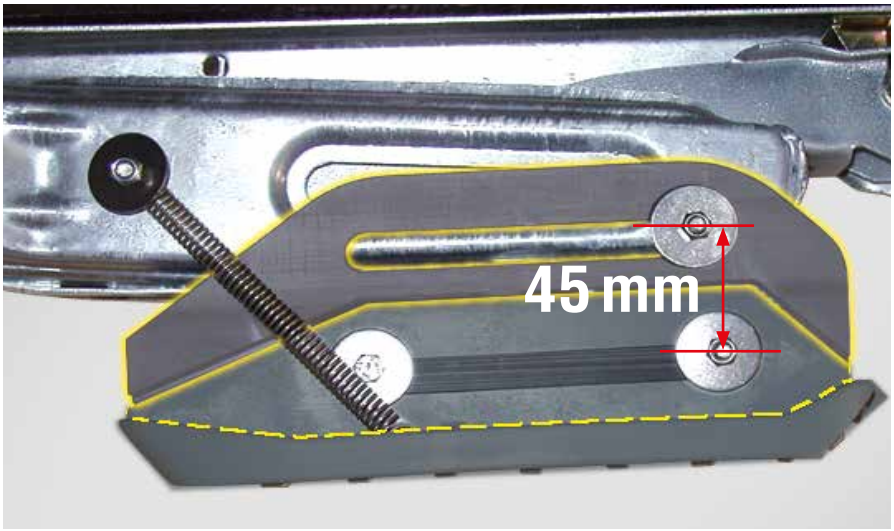



SAP: BIG-FOOT ADAPTER KPL IM KARTON	
Adapter 45 mm for AL-KO big foot™	
Part no. (content 4 units)	1 213 899
Suitable for	Stabilform steadies and Premium corner steadies
Surface treatment	Plastic PA grey
	2.5 kg per set
	– 48 units (cardboard box)

ACCESSORIES FOR STEADIES



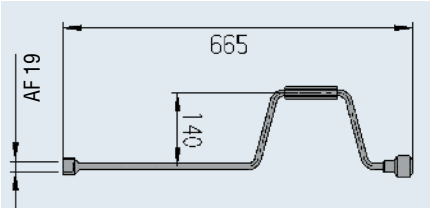

SAP: KURBEL KPL 140X 665X12 SW19 ZN12A

Extending crank, 665 mm

Part no.	205 520
	1.0 kg
	– –

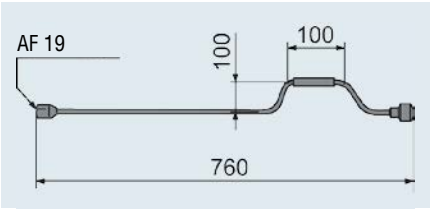

SAP: KURBEL KPL 100X 760X10 SW19 ZN12A

Extending crank, 760 mm

Part no.	1 213 048
	1.0 kg
	– –

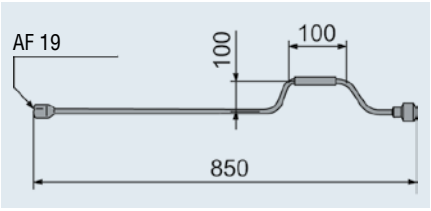

SAP: KURBEL KPL 100X 850X10 SW19 ZN12A

Extending crank, 850 mm

Part no.	1 213 049
	1.0 kg
	– –

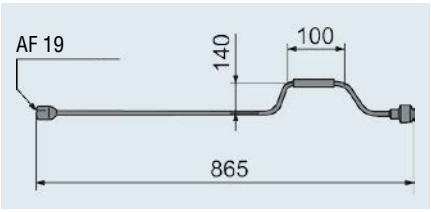

SAP: KURBEL KPL 140X 865X12 SW19 ZN12A

Extending crank, 865 mm

Part no.	267 363
	1.0 kg
	– –

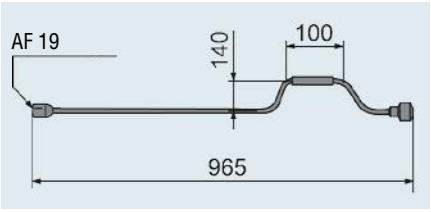

SAP: KURBEL KPL 140X 965X12SW19 ZN12A

Extending crank, 965 mm

Part no.	1 221 457
	1.0 kg
	– –

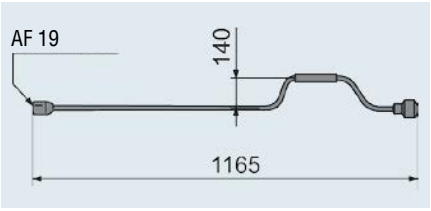

SAP: KURBEL KPL 140X1165X12SW19 ZN12A

Extending crank, 1,165 mm

Part no.	1 224 784
	1.0 kg
	– –



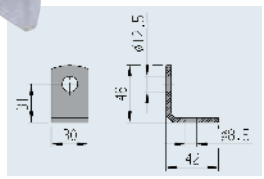

SAP: WINKEL FEUVZ

Holding link for screwing on

Part no.	365 100
	0.05 kg



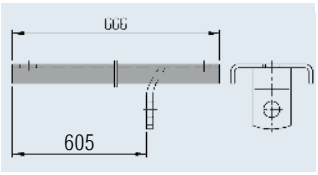

SAP: MONTAGESCHIENE VZ LANG

Mounting rail

Part no.	294 370
	0.5 kg

ACCESSORIES FOR STEADY LEGS

Clamps



Zn

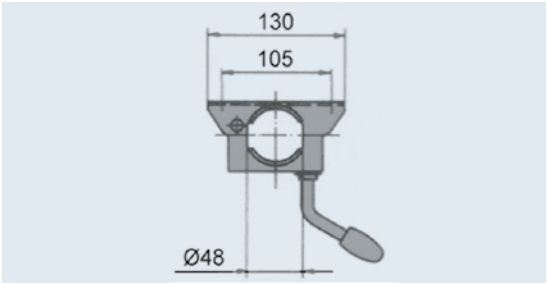

SAP: KLEMMSCHELLE F ROHR 48 VZ MONT WH	
Clamp Ø 48 rigid T-Bar	
Part no.	205 318 10
Stationary nose load	Max. 200 kg
	0.8 kg
	– 300 units



Zn

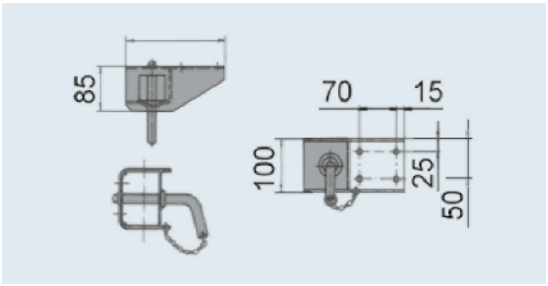

SAP: STECKTEIL KPL	
Clamp ⍁ 50	
Part no.	205 701
Stationary nose load	Max. 400 kg
	2.0 kg
	– 300 units

Steady leg attachment



Zn

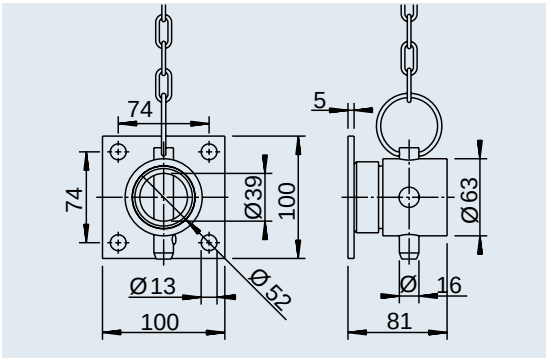

SAP: BAUSATZ F STÜTZFUSSBEFESTIGUNG	
Steady leg attachment construction set pivoting 90° sideways	
Part no.	1 225 455
Stationary nose load	Max. 1,000 kg
	1.0 kg
	– 40 units



Zn

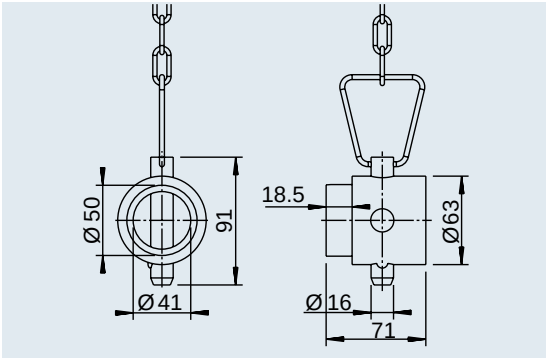

SAP: BAUSATZ F STÜTZFUSSBEFESTIGUNG	
Steady leg attachment construction set pivoting 90° sideways	
Part no.	1 223 192
Stationary nose load	Max. 1,000 kg
	0.9 kg
	– 40 units

STEADY LEGS, RIGID

Max. 150 kg



Zn

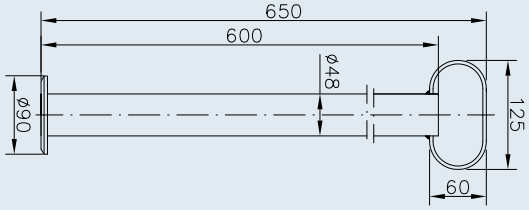

SAP: STÜTZE RSR 48-600	
Steady leg RSR 48-600	
Part no.	1860860 *(W 3014)*
Stationary nose load	Max. 150 kg
	2.07 kg
	EWP 250 / GiBo 250
	12



Zn

XL

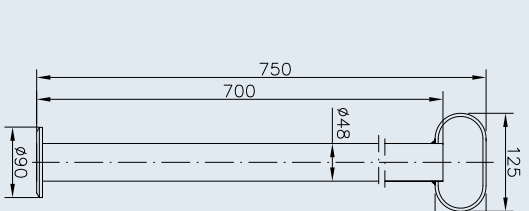

SAP: STÜTZE RSR 48-700	
Steady leg RSR 48-700	
Part no.	1860863 *(W 3020)*
Stationary nose load	Max. 150 kg
	2.26 kg
	EWP 250 / GiBo 250
	12



Zn

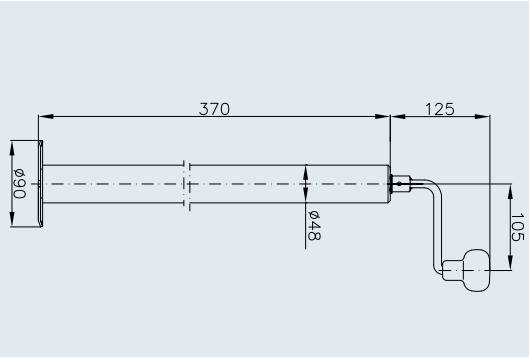

SAP: STÜTZE SPINDL ST 48-90	
Steady leg ST 48-90	
Part no.	1860716 *(W 3060)*
Stationary nose load	Max. 150 kg
Extended length	220 mm
	3.00 kg
	EWP 250 / GiBo 250
	12



Zn

XL

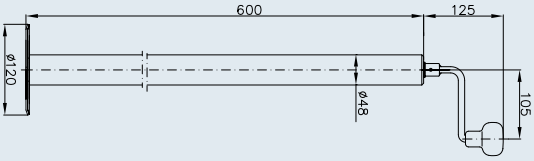

SAP: STÜTZE SPINDL ST 48-120	
Steady leg ST 48-120	
Part no.	1860717 *(W 3070)*
Stationary nose load	Max. 150 kg
Extended length	220 mm
	3.99 kg
	EWP 100 / GiBo 100
	12

STEADY LEGS, PIVOTING

Max. 1,300 kg





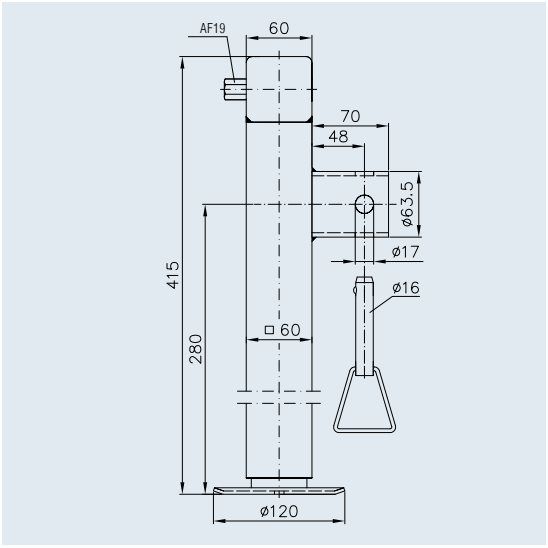

SAP: STÜTZFUSS SPNDL SF 60-19-280 OHNE KURB	
Steady leg SF 60-19-280	
Part no.	1731091 *(W 3520)*
Stationary nose load	Max. 1,300 kg
Extended length	240 mm
	6.25 kg
	EWP 100 / GiBo 100
	12





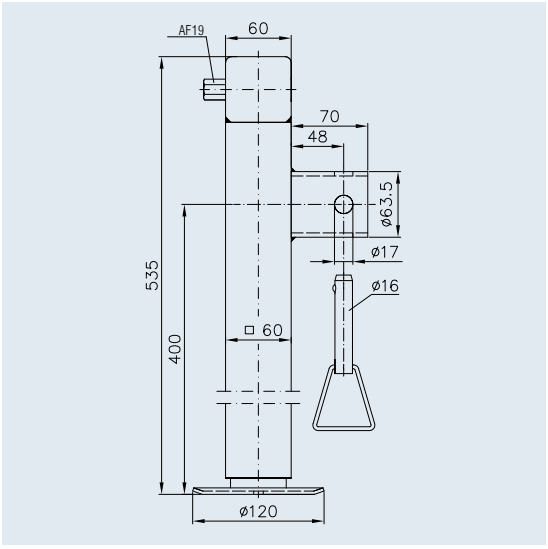

SAP: STÜTZE SPINDL SF 60-19-400 OHNE KURB	
Steady leg SF 60-19-400	
Part no.	1860727 *(W 3540)*
Stationary nose load	Max. 1,300 kg
Extended length	365 mm
	7.75 kg
	EWP 100 / GiBo 100
	12

STEADY LEGS, PIVOTING

Max. 1,300 kg



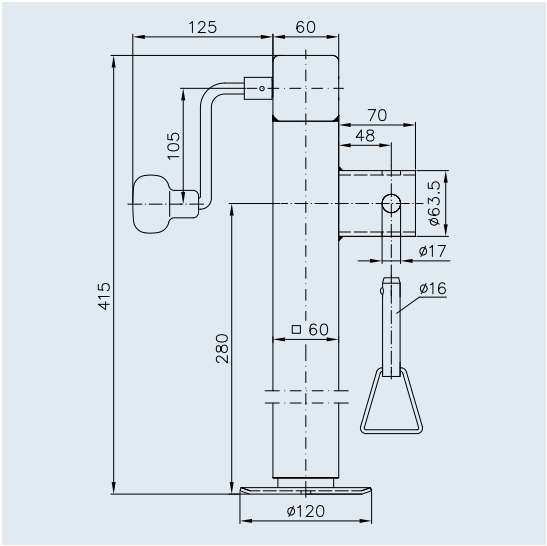

SAP: STÜTZE SPINDL SF 60-280	
Steady leg SF 60-280	
Part no.	1860720 *(W 3510)*
Stationary nose load	Max. 1,300 kg
Extended length	240 mm
	6.40 kg
	EWP 100 / GiBo 100
	12



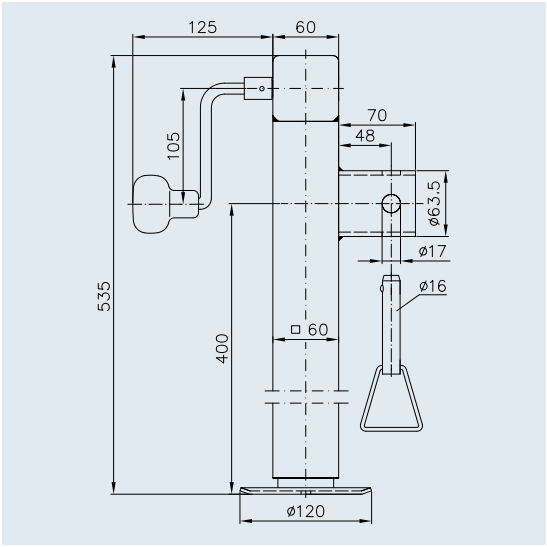

SAP: STÜTZE SPINDL SF 60-400	
Steady leg SF 60-400	
Part no.	1860726 *(W 3530)*
Stationary nose load	Max. 1,300 kg
Extended length	365 mm
	8.00 kg
	EWP 100 / GiBo 100
	12

STEADY LEGS, PIVOTING

Max. 1,300 kg



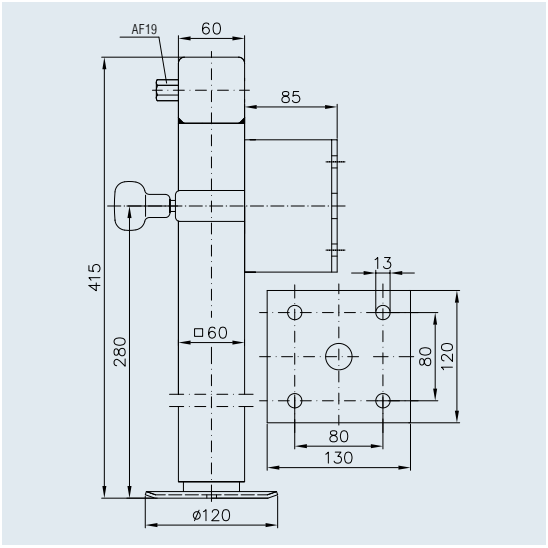

SAP: STÜTZE SPINDL SF 60-D85-19-280+ADAP

Steady leg SF 60-D85-19-280+ADAP

Part no.	1860723 *(W 3524)*
Stationary nose load	Max. 1,300 kg
Extended length	240 mm
	7.70 kg
	EWP 80 / GiBo 80
	12



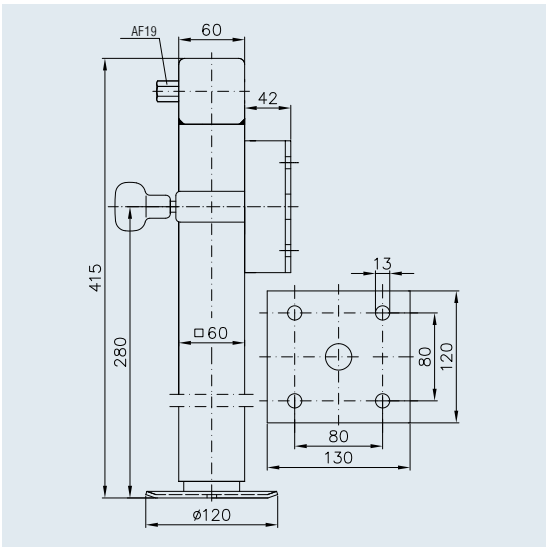

SAP: STÜTZE SPINDL SF 60-D42-19-280+ADAP

Steady leg SF 60-D42-19-280+ADAP

Part no.	1860725 *(W 3526)*
Stationary nose load	Max. 1,300 kg
Extended length	240 mm
	7.31 kg
	EWP 80 / GiBo 80
	12

EXTENDING SUPPORTS

Max. 1,800 – 2,000 kg



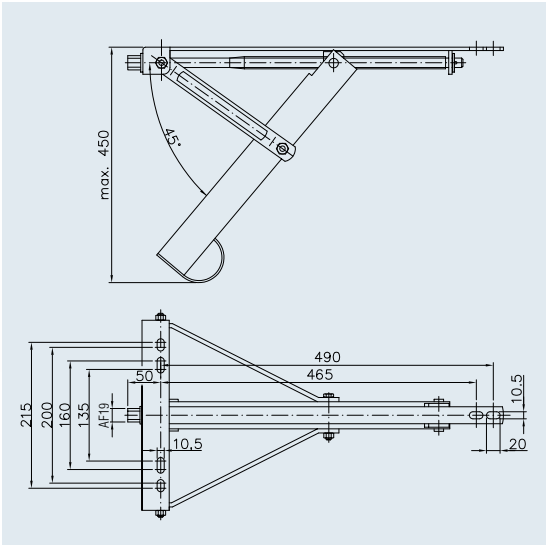

SAP: STÜTZE SPINDL ADS 460 V	
Extendable corner steady ADS 460 V	
Part no.	1860696 *(W 4430)*
Stationary nose load	Max. 1,800 kg (with 4 units)
Extended length	450 mm
	4.57 kg
	EWP 100 / GiBo 100
	12



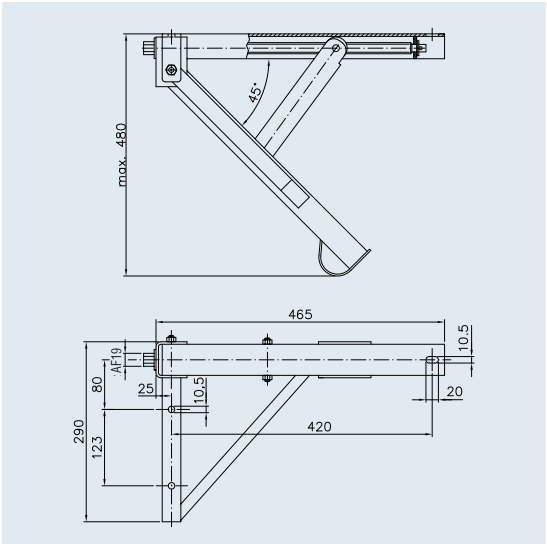

SAP: Stütze Spindl ADS 480	
Extendable corner steady ADS 480 VL / ADS 480 VR	
Part no. VL	1860698 *(W 4440)*
Part no. VR	1860699 *(W 4442)*
Stationary nose load	Max. 2,000 kg (with 4 units)
Extended length	480 mm
	6.72 kg
	EWP 75 / GiBo 75
	12

ACCESSORIES

Adapter



Zn

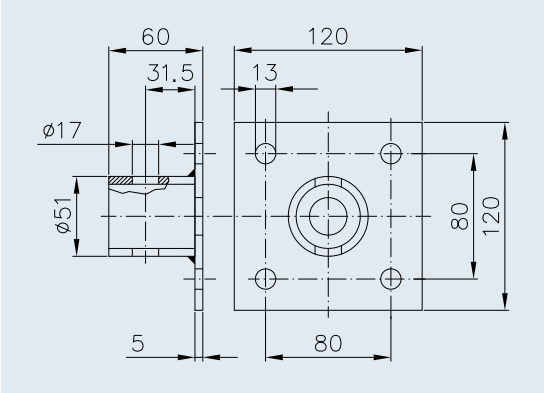

SAP: ADAPTER SF60	
Adapter ADAP SF 60	
Part no.	1731092 *(W 3500)*
	0.82 kg
	EWP 1,000 / GiBo 1,000
	12

Hand cranks







Zn

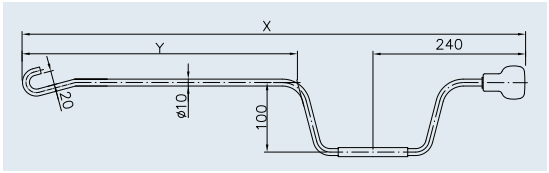

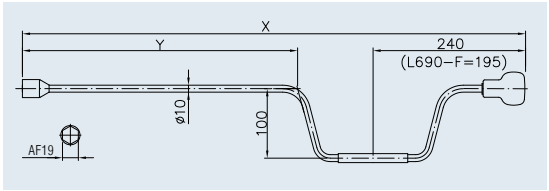

10

	Part no.	Dimension X	Dimension Y				
CRANK KPL HKB H	1860555 *(W 4474)*	615 mm	285 mm	0.51 kg	–	700	12
CRANK KPL HKB SW 19-L660	1860547 *(W 4460)*	660 mm	320 mm	0.56 kg	–	1,000	12
CRANK KPL HKB SW 19-L690-F	1860550 *(W 4466)*	690 mm	400 mm	0.57 kg	–	1,050	12
CRANK KPL HKB SW 19-L780	1860549 *(W 4464)*	780 mm	450 mm	0.63 kg	–	700	12
CRANK KPL HKB SW 19-L870	1860552 *(W 4468)*	870 mm	540 mm	0.70 kg	–	700	12
CRANK KPL HKB SW 19-L920	1860551 *(W 4467)*	920 mm	580 mm	0.72 kg	–	700	12

11. MUDGUARDS



MUDGUARDS

Product range 488 – 489

Mudguard BASIC

Single axle trailer, without mud flap 490 – 491

Single axle trailer, with mud flap 492

Trailer mounted, without mud flap 493

Tandem, without mud flap 494

Tandem, with mud flap 495

Mudguard PLUS

Single axle trailer, without mud flap 496 – 497

Single axle trailer, with mud flap 498

Trailer mounted, with and without mud flap 499

Tandem, without mud flap 500

Tandem, with mud flap 501

Accessories for mudguards

Mud flap 502

Support step 503

MUDGUARDS

Product range



Support step, load capacity 90 kg
Material PA GF30 (polyamide with 30% glass fibres).
To reach heights ergonomically with ease, a support step is additionally available; this can also be mounted rotated 180° on the side wall or the frame.



Mud flap
LDPE material. Complies with the splash protection directive 91/226/EC, Annex III, section 7.3.6 or 2010/19/EU.
Important: Regulation for new EC trailer registrations from April 2011 onwards. Further requirements on the splash protection system resulting from this standard must be examined by the trailer manufacturer in conjunction with the trailer in question.
An integrated splash guard prevents rain water from the tyres from hindering following traffic..

Product details
Shape
Versions available
Elastically mouldable, i.e. returns to shape after minor impacts
Complies with the directive on outside edges 74/483/EEC
Pre-drilled fixing holes
Support step
Mud flap can be supplied already fitted
Loose mud flaps (self-installation) from the trailer manufacturer
Material
Weight
Colour
Corrosion protection
Special colours
Temperature resistance
UV resistance





BASIC mudguard	**PLUS mudguard**
Classic	Modern, winner of the IP product design award 2013
SA 140 / 190 / 200 / 220 / 255 TA 200 / 220	SA 180 / 200 / 220 / 240 / 260 TA 200 / 240
Yes - the mudguard returns to its starting position	Yes - the mudguard returns to its starting position
No	Yes
No	Yes - for details see the ordering overview
Possible	Possible
Yes - for details see the ordering overview	Yes - for details see the ordering overview
Yes - for details see the ordering overview	Yes - for details see the ordering overview
PP/EPDM	PP/EPDM
Up to 50% lighter than metal	Up to 50% lighter than metal
Black, similar to RAL 9005	Black, similar to RAL 9005
Permanent corrosion protection, as plastic	Permanent corrosion protection, as plastic
Possible, minimum quantity 1,000 units per date	Possible, minimum quantity 1,000 units per date
+60° to -30°	+60° to -30°
Yes	Yes

MUDGUARDS

Single axle trailer, without mud flap



SA 140

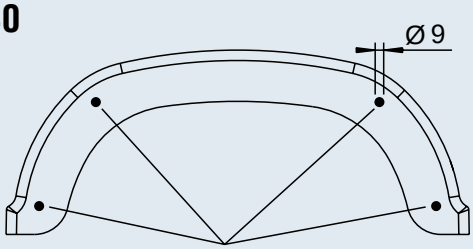

Recommended fixing holes!

Area for customer logo (optional)

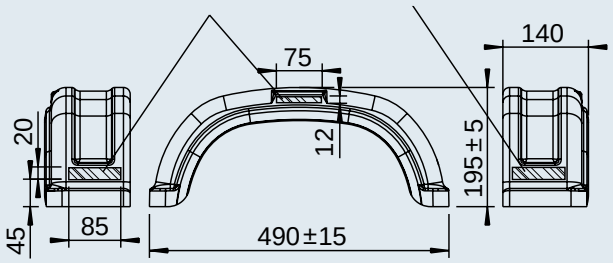

SA 190

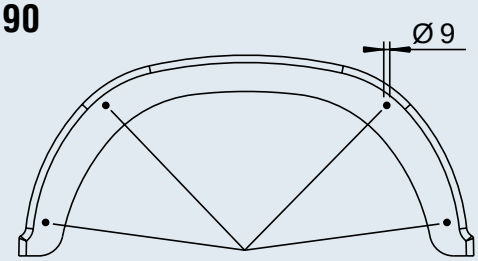

Recommended fixing holes!

Area for customer logo (optional)

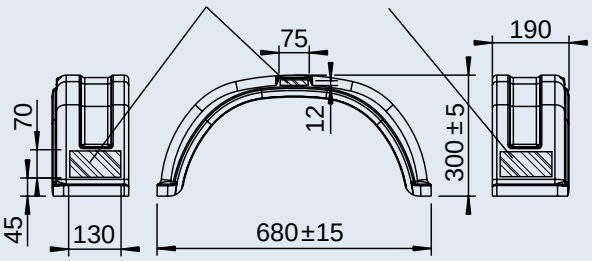

SA 200

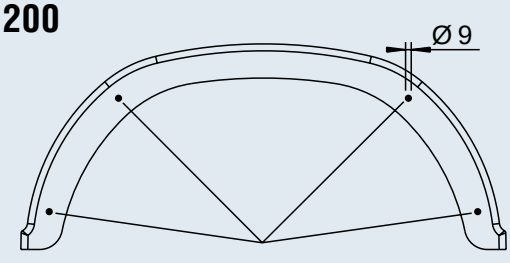

Recommended fixing holes!

Area for customer logo (optional)

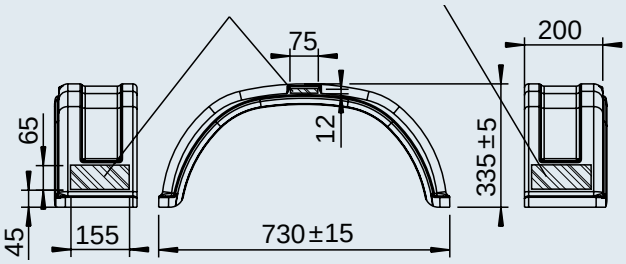

SA 220

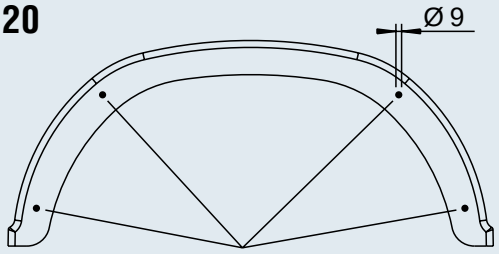

Recommended fixing holes!

Area for customer logo (optional)

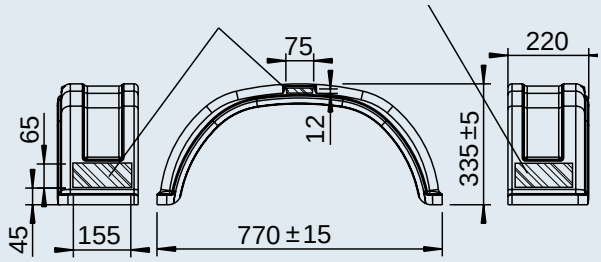

11

BASIC mudguard, single axle trailer, without mud flap

Type	Part no.	SAP	Process	RAL colour	max. perm. tyre radius				
SA 140	1 258 169	KOTFLUEGEL-RK EA140/490	injection-moulded	Similar to black RAL 9017	203 mm	0.41	–	100	2
SA 190	1 258 171	KOTFLÜGEL-RK EA190/680	injection-moulded	Similar to black RAL 9017	283 mm	0.80	–	60	2
SA 200	1 257 130	KOTFLÜGEL-RK EA200/730	injection-moulded	Similar to black RAL 9017	300 mm	0.87	–	75	2
SA 220	1 257 131	KOTFLÜGEL-RK EA220/ 770 O BOHRUNGEN	injection-moulded	Similar to black RAL 9017	325 mm	0.87	–	45	2

MUDGUARDS

Single axle trailer, mounted with mud flap



SA 200

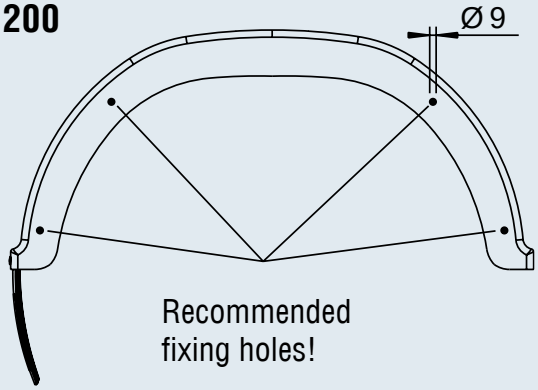

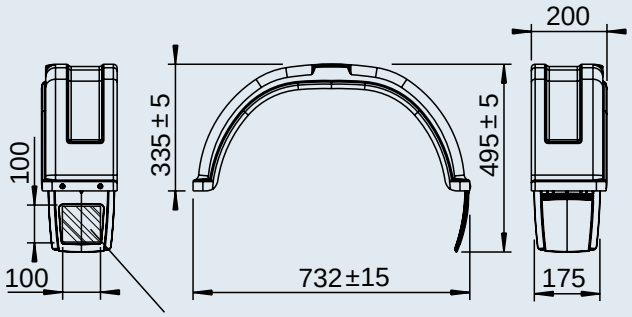

Area for customer logo (optional)

SA 220

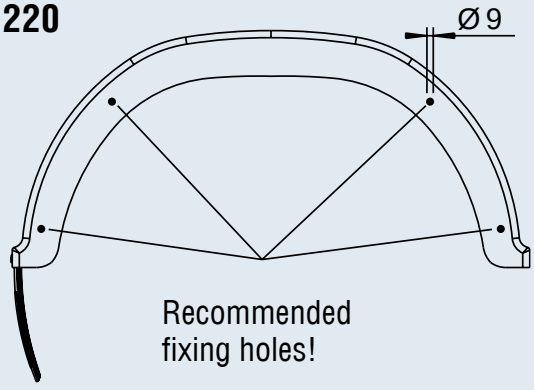

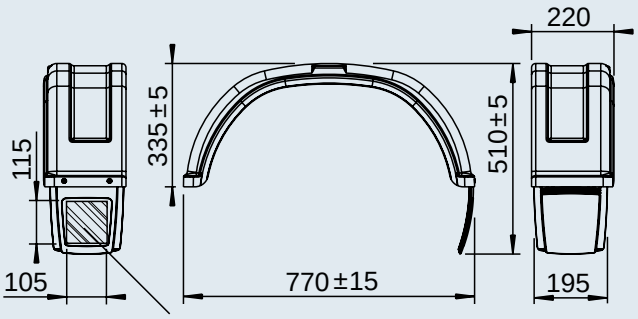

Area for customer logo (optional)

BASIC mudguard, single axle trailer, mounted with mud flap

Type	Part no.	SAP	For driving direction	Process	RAL colour	max. perm. tyre radius				
SA 200	1 259 347	KOTFLÜGEL-RK EA200 SL LI	Left	injection-moulded	Similar to black RAL 9017	300 mm	0.94	–	33	20
SA 200	1 259 348	KOTFLÜGEL-RK EA200 SL RE	Right	injection-moulded	Similar to black RAL 9017	300 mm	0.94	–	33	20
SA 220	1 259 349	KOTFLÜGEL-RK EA220 SL LI	Left	injection-moulded	Similar to black RAL 9017	325 mm	0.94	–	24	20
SA 220	1 259 350	KOTFLÜGEL-RK EA220 SL RE	Right	injection-moulded	Similar to black RAL 9017	325 mm	0.94	–	24	20

MUDGUARDS

Trailer mounted, without mud flap



1 213 967

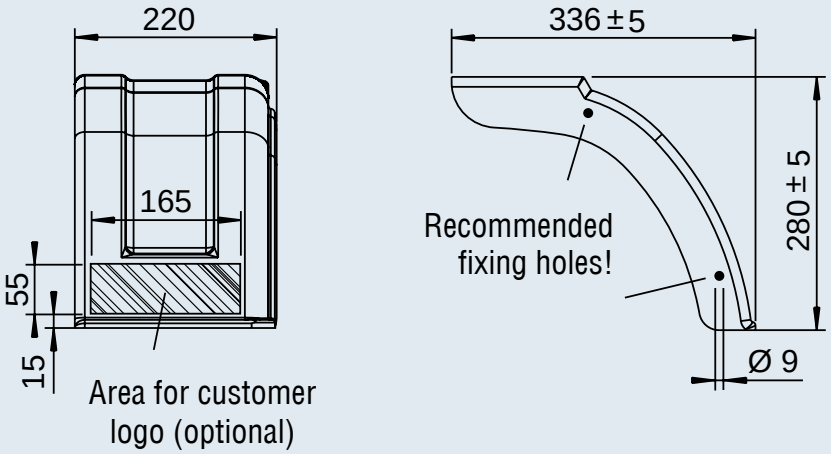



1 213 968

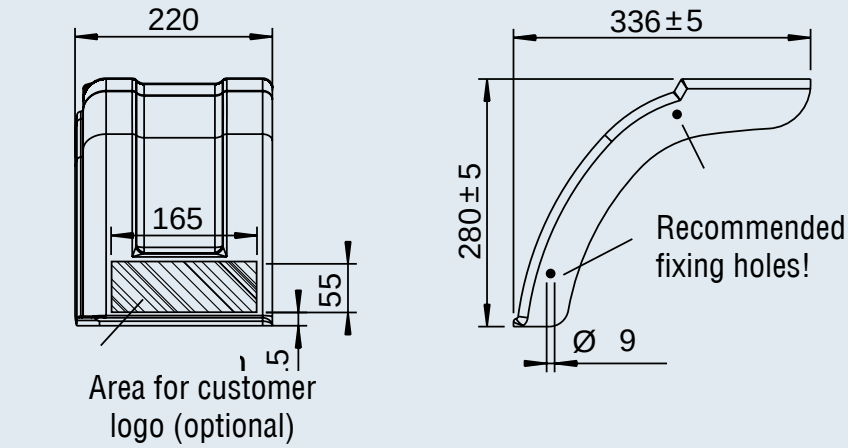

11

BASIC mudguard, trailer mounted, without mud flap

Type	Part no.	SAP	Process	RAL colour	max. perm. tyre radius				
HL 220	1 213 967	KOTFLÜGEL-TEIL 10"	deep-drawn	Similar to black RAL 9017	325 mm	0.34	–	60	2
HL 220	1 213 968	KOTFLÜGEL-TEIL 10"	deep-drawn	Similar to black RAL 9017	325 mm	0.34	–	60	2

MUDGUARDS

Tandem, without mud flap



TA 200

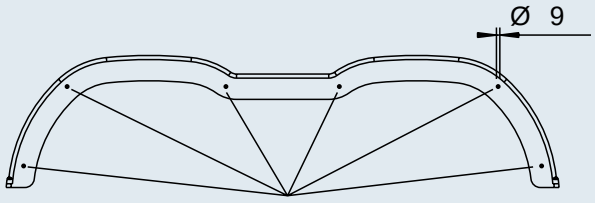

Recommended fixing holes!

Area for customer logo (optional)

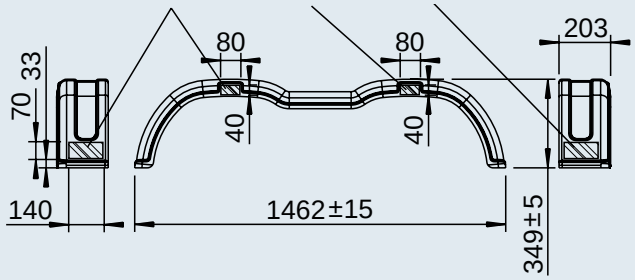

TA 220

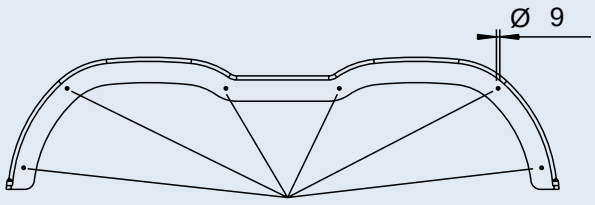

Recommended fixing holes!

Area for customer logo (optional)

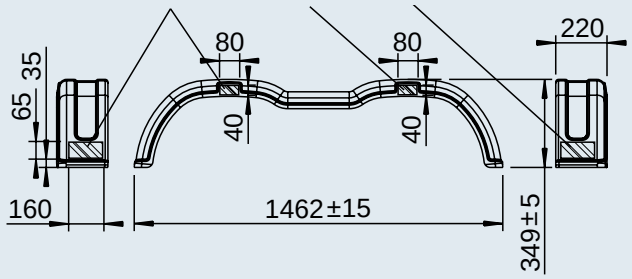

BASIC mudguard, tandem, without mud flap

Type	Part no.	SAP	Process	RAL colour	max. perm. tyre radius				
TA 200	1 220 964	KOTFLÜGEL TA20146	deep-drawn	Similar to black RAL 9017	335 mm	1.85	–	60	2
TA 220	246 120	KOTFLÜGEL TA22146	deep-drawn	Similar to black RAL 9017	335 mm	1.85	–	60	2

MUDGUARDS

Tandem, mounted with mud flap



TA 200

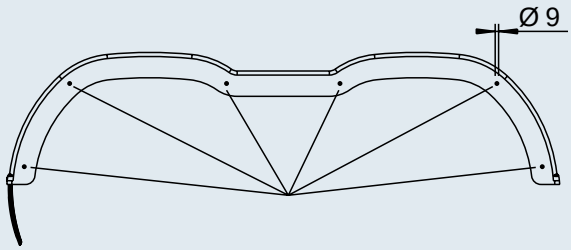

Recommended fixing holes!

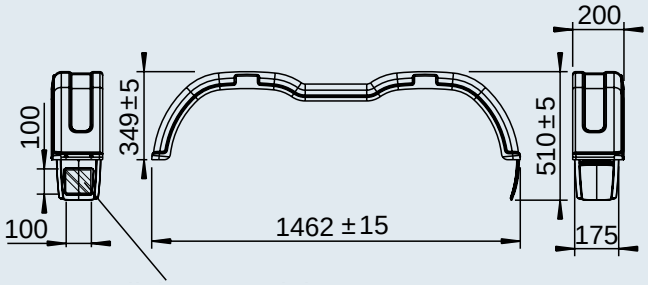

Area for customer logo (optional)

11

BASIC mudguard, tandem, mounted with mud flap

Type	Part no.	SAP	For driving direction	Process	RAL colour	max. perm. tyre radius				
TA 200	1 259 345	KOTFLÜGEL TA20146 SL LI	Left	deep-drawn	Similar to black RAL 9017	335 mm	1.92	–	21	20
TA 200	1 259 346	KOTFLÜGEL TA20146 SL RE	Right	deep-drawn	Similar to black RAL 9017	335 mm	1.92	–	21	20

MUDGUARDS

Single axle trailer, without mud flap



SA 180

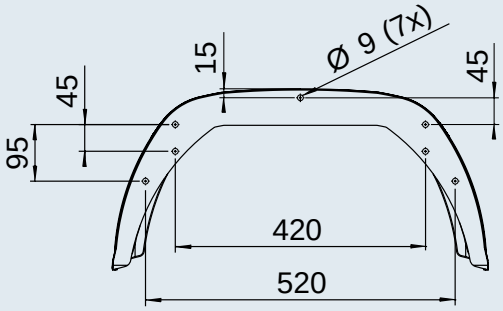

Area for customer logo (optional)

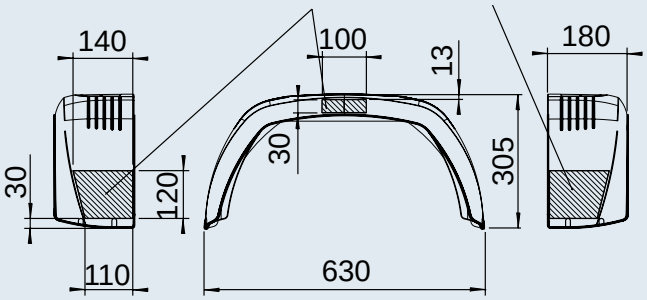

SA 200

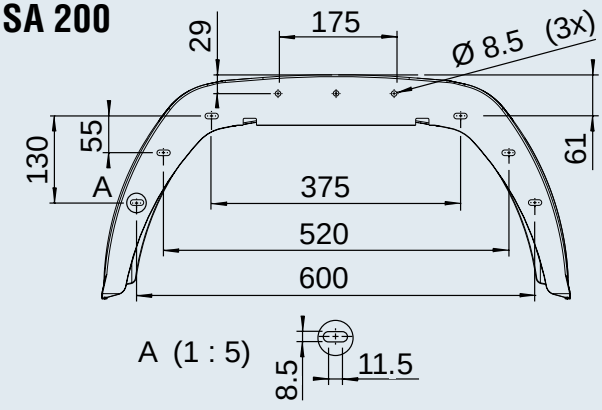

Area for customer logo (optional)

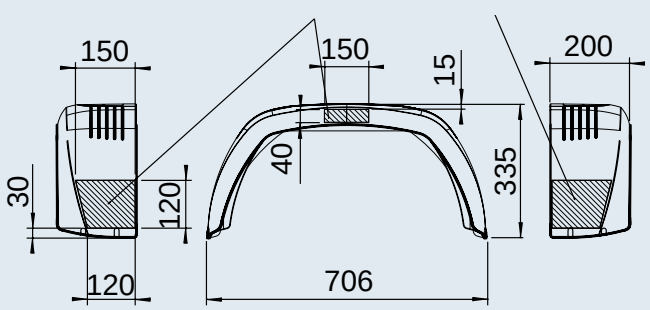

SA 220

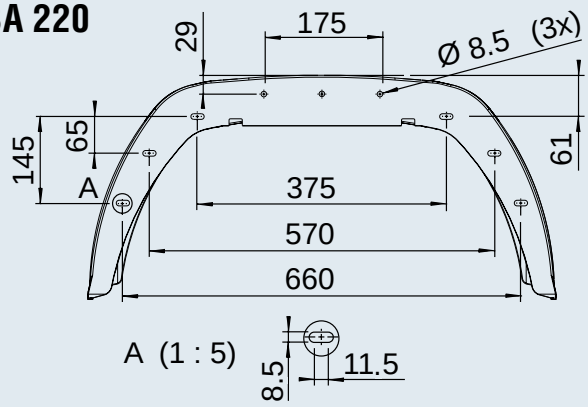

Area for customer logo (optional)

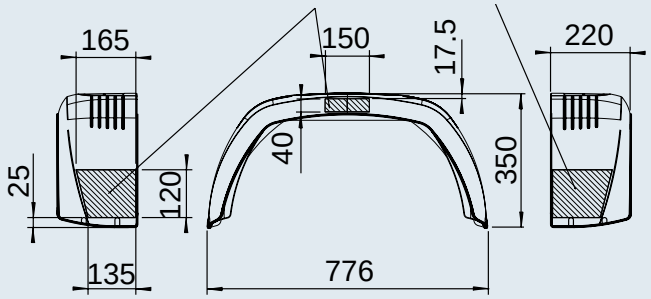

SA 240

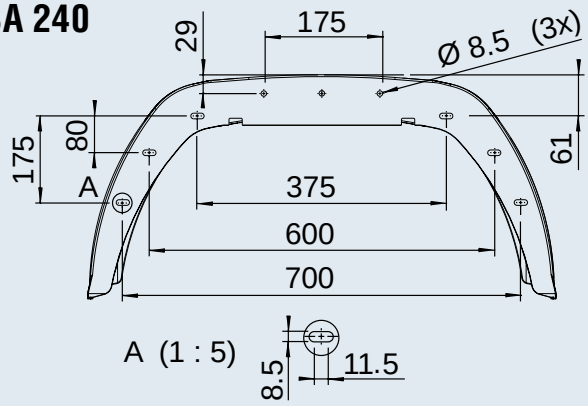

Area for customer logo (optional)

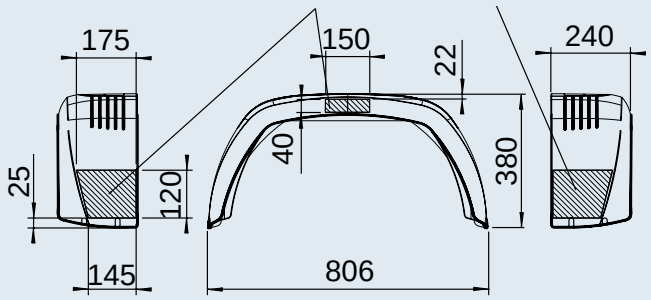

SA 260

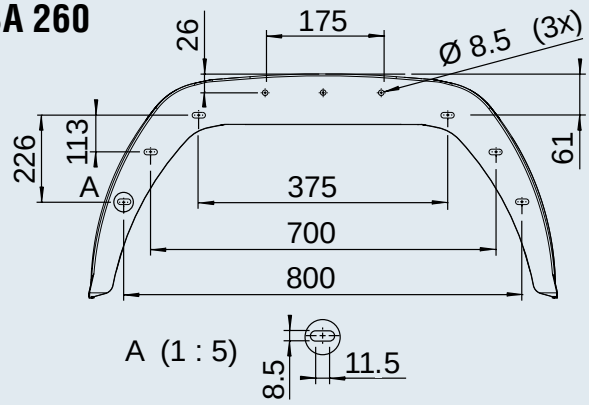

Area for customer logo (optional)

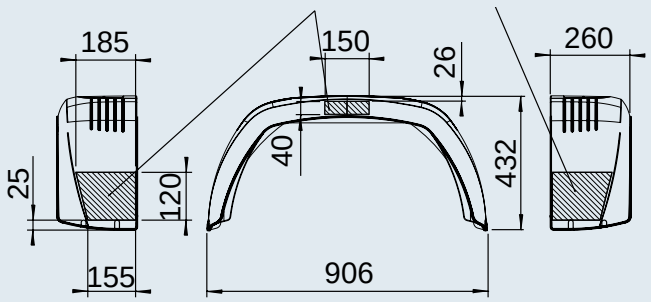

11

PLUS mudguard, single axle trailer, without mud flap

Type	Part no.	SAP	Process	RAL colour	max. perm. tyre radius				
SA 180	1 258 797	KOTFLÜGEL BKS EA180 MM SCHWARZ GL	injection-moulded	Similar to black RAL 9017	260 mm	0.41	–	100	2
SA 200	1 259 576	KOTFLÜGEL BKS EA200/706 MM SCHWARZ	injection-moulded	Similar to black RAL 9017	285 mm	0.85	–	60	2
SA 220	1 259 577	KOTFLÜGEL BKS EA220/776 MM SCHWARZ	injection-moulded	Similar to black RAL 9017	300 mm	0.98		40	2
SA 240	1 259 578	KOTFLÜGEL BKS EA240/806 MM SCHWARZ	injection-moulded	Similar to black RAL 9017	325 mm	1.13	–	30	2
SA 260	1 259 163	KOTFLÜGEL BKS EA260/900 MM SCHWARZ	injection-moulded	Similar to black RAL 9017	370 mm	1.28	–	30	2

MUDGUARDS

Single axle trailer, mounted with mud flap



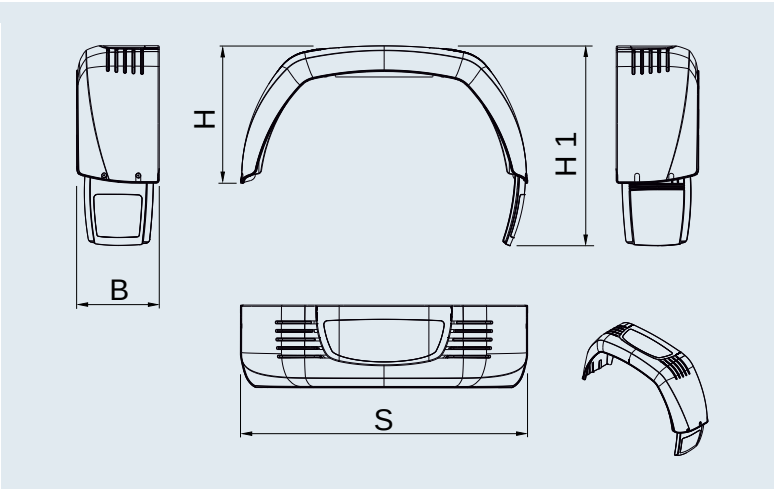

PLUS mudguard, single axle trailer, mounted with mud flap

Type	Part no.	SAP	For driving direction	B mm	H mm	H1 mm	S mm	Process	RAL colour similar	Max. perm. tyre radius mm				
SA 180	1 259 015 1 259 016	KOTFLÜGEL BKS EA180 MM SCHWARZ SL LI KOTFLÜGEL BKS EA180 MM SCHWARZ SL RE	left right	180	305	450	630	injection-moulded	Black RAL 9017	260	0.80	–	24	20
SA 200	1 259 579 1 259 580	KOTFLÜGEL BKS EA200 MM SCHWARZ SL LI KOTFLÜGEL BKS EA200 MM SCHWARZ SL RE	left right	200	335	490	706	injection-moulded	Black RAL 9017	285	0.92	–	33	20
SA 220	1 259 581 1 259 582	KOTFLÜGEL BKS EA220 MM SCHWARZ SL LI KOTFLÜGEL BKS EA220 MM SCHWARZ SL RE	left right	220	350	520	776	injection-moulded	Black RAL 9017	300	1.05	–	24	20
SA 240	1 259 583 1 259 584	KOTFLÜGEL BKS EA240 MM SCHWARZ SL LI KOTFLÜGEL BKS EA240 MM SCHWARZ SL RE	left right	240	380	570	806	injection-moulded	Black RAL 9017	325	1.22	–	24	20
SA 260	1 259 166 1 259 167	KOTFLÜGEL BKS EA260 MM SCHWARZ SL LI KOTFLÜGEL BKS EA260 MM SCHWARZ SL RE	left right	260	432	635	906	injection-moulded	Black RAL 9017	370	1.60	–	24	20

MUDGUARDS

Trailer mounted, mounted with and without mud flap



1 258 634

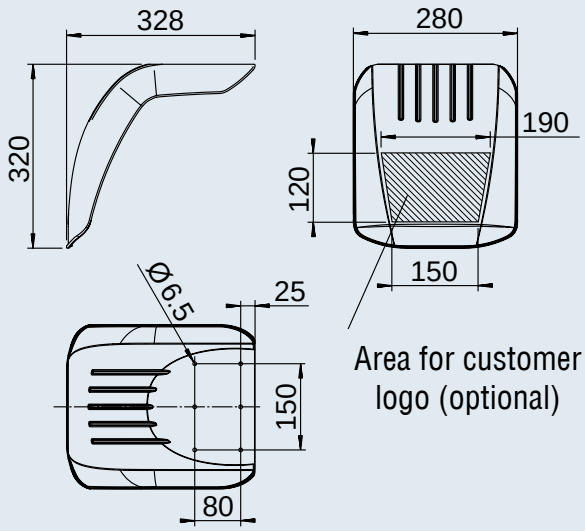



1 258 898

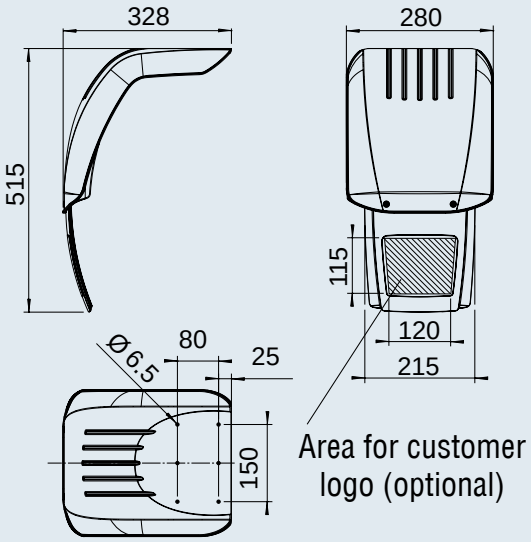

11

PLUS mudguard, trailer mounted, mounted with mud flap

Type	Part no.	SAP	Process	RAL colour	max. perm. tyre radius				
HL 280	1 258 634	KOTFLÜGEL BKS HL280/328 MM SCHWARZ	injection-moulded	Similar to black RAL 9017	300 mm	0.46	–	184	2
HL 280	1 258 898	KOTFLÜGEL BKS HL280/328 MM SCHWARZ SL	injection-moulded	Similar to black RAL 9017	300 mm	0.55	–	330	20

MUDGUARDS

Tandem, without mud flap



TA 220

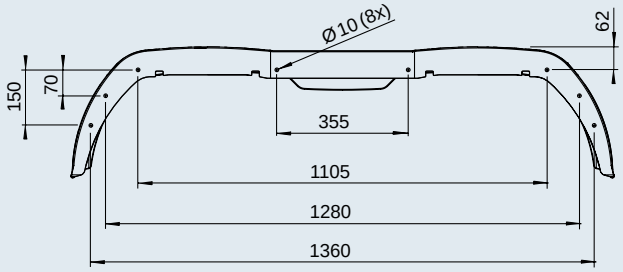

Area for customer logo (optional)

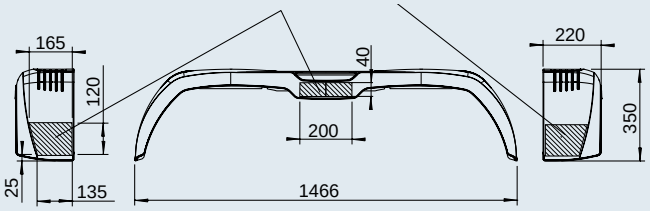

TA 240

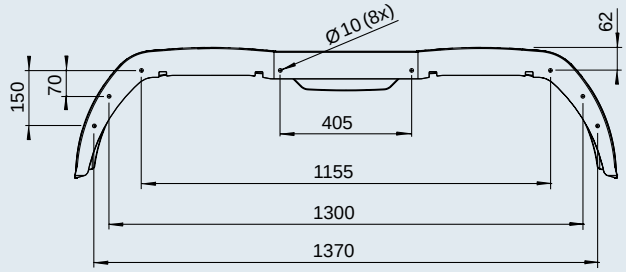

Area for customer logo (optional)

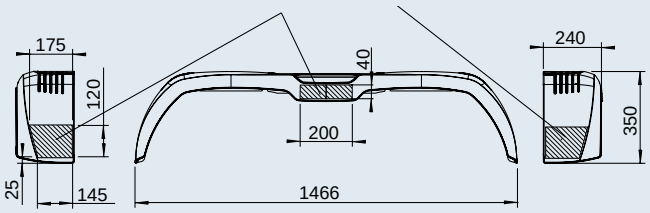

PLUS mudguard, tandem, without mud flap

Type	Part no.	SAP	Process	RAL colour	max. perm. tyre radius				
TA 220	1 259 585	KOTFLÜGEL BKS TA220/ 1466 MM SCHWARZ	injection-moulded	Similar to black RAL 9017	300 mm	1.58	–	30	2
TA 240	1 259 586	KOTFLÜGEL BKS TA240/ 1466 MM SCHWARZ	injection-moulded	Similar to black RAL 9017	325 mm	1.71	–	30	2

MUDGUARDS

Tandem, mounted with mud flap



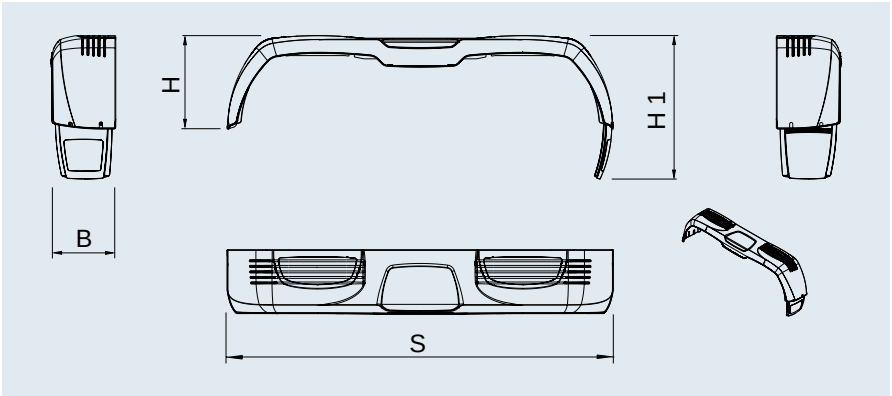

11

PLUS mudguard, tandem, mounted with mud flap

Type	Part no.	SAP	For driving direction	B mm	H mm	H1 mm	S mm	Process	RAL colour similar	Max. perm. tyre radius mm				
TA 220	1 259 587	KOTFLÜGEL BKS TA220 MM SCHWARZ SL LI	left	220	350	520	1466	injection-moulded	Black RAL 9017	300	1.65	–	21	20
TA 220	1 259 588	KOTFLÜGEL BKS TA220 MM SCHWARZ SL RE	right	220	350	520	1466	injection-moulded	Black RAL 9017	300	1.65	–	21	20
TA 240	1 259 589	KOTFLÜGEL BKS TA240 MM SCHWARZ SL LI	left	240	350	520	1466	injection-moulded	Black RAL 9017	325	1.80	–	21	20
TA 240	1 259 590	KOTFLÜGEL BKS TA240 MM SCHWARZ SL RE	right	240	350	520	1466	injection-moulded	Black RAL 9017	325	1.80	–	21	20

ACCESSORIES

Splash protection



Splash protection/mud flap

LDPE material. Complies with the splash protection directive 91/226/EC, Annex III, section 7.3.6 or 2010/19/EU.

Important: Regulation for new EC trailer registrations from April 2011 onwards. Further requirements on the mud flap system resulting from this standard must be examined by the trailer manufacturer in conjunction with the trailer in question.

An integrated mud flap controls the rainwater to prevent splashing over the tyre to the traffic behind.



1 258 648

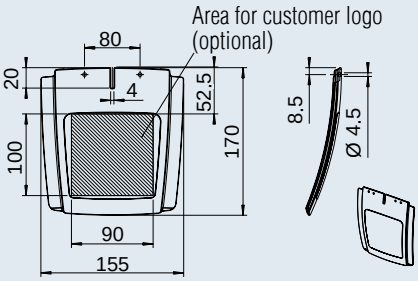

1 258 651

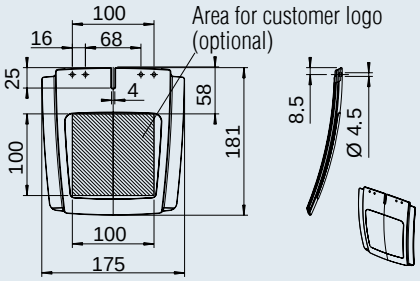

1 258 654

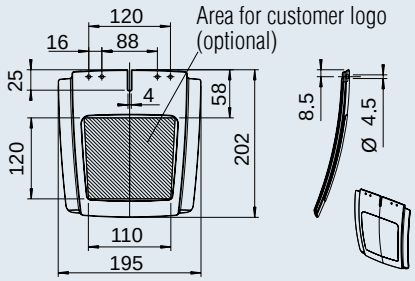

1 258 657

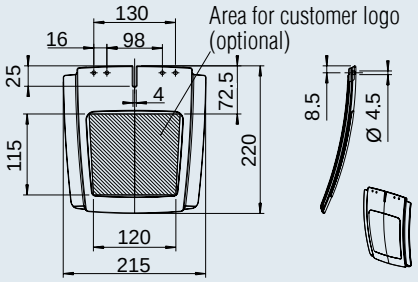

1 259 165

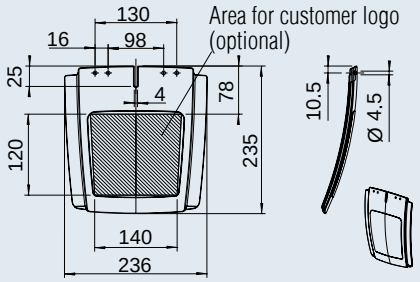

Splash protection

Part no.	SAP	Suitable for mudguard	RAL colour similar				
1 258 648	SPRITZLAPPEN BKS 180 MM SCHWARZ	SA 180	Black RAL 9017	0.06	–	–	2
1 258 651	SPRITZLAPPEN BKS 200 MM SCHWARZ	SA 200	Black RAL 9017	0.07	200	–	2
1 258 654	SPRITZLAPPEN BKS 220 MM SCHWARZ	SA 220/TA 220/HL 280	Black RAL 9017	0.08	140	–	2
1 258 657	SPRITZLAPPEN BKS 240 MM SCHWARZ	SA 240/TA 240/HL 280	Black RAL 9017	0.09	70	–	2
1 259 165	SPRITZLAPPEN BKS 260 MM SCHWARZ	SA 260	Black RAL 9017	0.10	–	–	2

ACCESSORIES

Support step

Support step, load capacity 90 kg

Material PA GF30 (polyamide with 30% glass fibres). To reach objects at height easily, a support step is additionally available; this can also be mounted turned through 180° on the side wall or the frame.





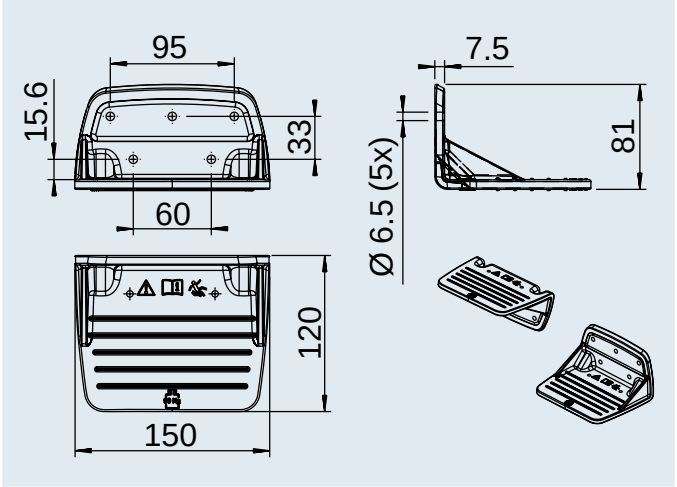

11

Support step

Part no.	SAP	Load capacity	RAL colour similar				
1 258 642	AUFSTIEGHILFE BKS UNTEN SCHWARZ	90 kg	Black RAL 9017	0.30	90	–	2

12. WINCHES



WINCHES

Product range 506 - 507

Cable winches PLUS

Cable winch PLUS with automatic weight brake 508
Cable winch PLUS 350 kg 509
Cable winch PLUS 500 kg 510
Cable winch PLUS 500 kg with automatic unwinder 511
Cable winch PLUS 900 kg 512
Cable winch PLUS 900 kg with automatic unwinder 513
Cable winch PLUS 1,150 kg with automatic unwinder 514

Cable winches BASIC

Cable winch BASIC with automatic weight brake 515
Cable winch BASIC 450 kg 516
Cable winch BASIC 900 kg 517

Towing winches BASIC

Towing winch BASIC 250 kg 518
Towing winch BASIC 500 kg 519

Accessories 520 - 521

Technical data 522 - 523

WINCHES

Product range

AL-KO WINCHES

DESIGN AND UTILITY FOR DEMANDING REQUIREMENTS

For 35 years AL-KO cable winches have proven themselves to make loading commercial and leisure trailers easier. With over 1.5 million units sold, the A-Frame mounted winches, manufactured from steel with gear drives, are robust and reliable. Smart features such as the weight brake, automatic unwinder or the removable crank make operating the winches easier and protect the loads to be moved.

Two range of winches are available to suit different applications. The BASIC range is suitable for normal leisure sector usage and the heavier duty OPTIMA Range is ideal for commercial and industrial applications..

AL-KO cable winches meet the following requirements:

- **EC standard EN 13157**
- **CE Directive**
- **Machinery Directive**

Range of applications **Warning!** The buyer of the cable winch must check whether the product has the properties that their individual usage requires.
Usage examples **Trailer sector:** e.g. transport of boats or cars, inclined lifts or floodlights **Agricultural sector:** e.g. sprayers, slurry pumps **Inner-company transport sector:** e.g. hand winch lift trucks **Private usage:** e.g. pulling trailers against the wall
Special fields of application: Construction hoists, stages, Studios, liftable suspended access equipment
BG inspection available (DGUV test)
Fulfils EG Norm EN 13157
Fulfils the requirements of the CE directive
Fulfils the requirements of the Machinery Directive
Weight brake available
Quality/processing/robustness
Made in...
Securing when lifting/pulling
Securing when lowering
Automatic unwinder available for cable or band
Crank can be removed quickly
Cable drum with plain bearing
Suitable for continuous operation
Corrosion protection
Gear wheel cover
Design
Cable for lifting and towing
Band for towing
Wall mounting possible

APPLICATION EXAMPLES

Boat trailers, car transporters, agricultural sprayer equipment, slurry pumps, mobile inclined lifts, mobile installation stackers, mobile floodlights, hand operated forklifts, private usage, e.g. pulling the trailer to the ceiling in the garage.

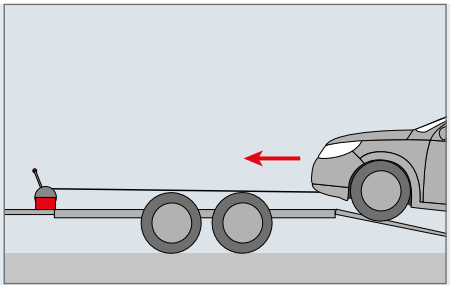







Towing winch unbraked BASIC ★	Cable winch braked BASIC ★	Cable winch braked PLUS ★ ★
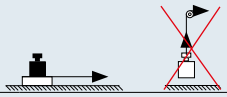		
no, only for towing a non-rolling load	Yes	Yes
no, only for towing a non-rolling load	Yes	Yes
no, only for towing a non-rolling load	Yes	Yes
no, only for towing a non-rolling load	Yes	Yes
Not suitable This area has additional requirements	Not suitable This area has additional requirements	Not suitable This area has additional requirements
No	No	Yes
No	Yes	Yes
No	Yes	Yes
No	Yes	Yes
No	Yes	Yes
Basic, e.g. private use	Basic, e.g. private use	Professional, e.g. commercial use
Far East	Far East	Austria
Yes, locking catch engages	Yes, weight brake, observe minimum load	Yes, weight brake, observe minimum load
No, no securing available	Yes, weight brake, observe minimum load	Yes, weight brake, observe minimum load
Yes, optionally possible, see range	Yes, optionally possible, see range	Yes, optionally possible, see range
Yes, optionally possible, see range	Yes, optionally possible, see range	Yes, optionally possible, see range
No	No	Yes
No	No	No
approx. 200 hours salt spray test, Galvanised with thick layer passivation	approx. 200 hours salt spray test, Galvanised with thick layer passivation	approx. 400 hours salt spray test, Zinc-nickel coating
No	Yes, optionally possible, see range	Yes
Classic	Classic	Modern
Yes, not fitted as accessory, available	Yes, not fitted as accessory, available	Yes, variant with cable fitted can be ordered
Yes, variant with band fitted can be ordered	Yes, variant with band fitted can be ordered	Yes, variant with band fitted can be ordered
No. Winch has no weight brake	Yes, however a console for wall mounting is necessary (accessory)	Yes, however a console for wall mounting is necessary (accessory)

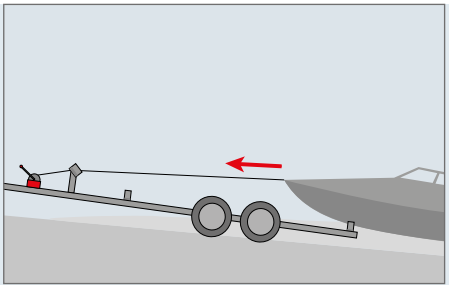

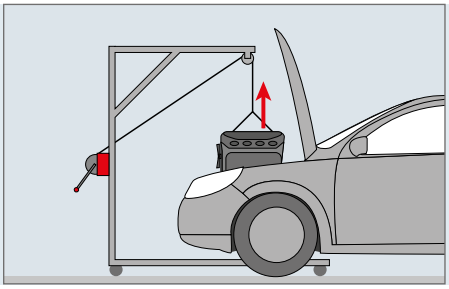

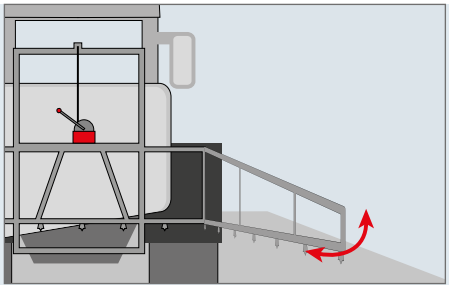

CABLE WINCHES PLUS

with automatic weight brake

LOAD PRESSURE BRAKE

Automatic



YOUR ADVANTAGE

- Modern design
- High-quality corrosion protection
- Automatic weight brake
- Cable drum with plain bearing
- Automatic unwinder for cable or band (optional)
- Removable crank (optional)
- Plastic gear cover
- Range: 350 / 500 / 900 / 1150 kg

SURFACE TREATMENT

High-quality zinc-nickel coating
approx. 400 hours salt spray test

tested

tested

CABLE WINCH OPERATION

Lifting: Turn the hand crank in a clockwise direction
Stopping: Let go of the hand crank in the desired position (automatic weight brake)
Lowering: Turn the hand crank in a counter-clockwise direction

AUTOMATIC UNWINDER OPERATION

1. Turn hand crank in an anti clockwise direction for one rotation, this will cause the weight brake to be deactivated
2. Pull up locking sleeve
3. Remove crank
4. The band or cable can now be removed



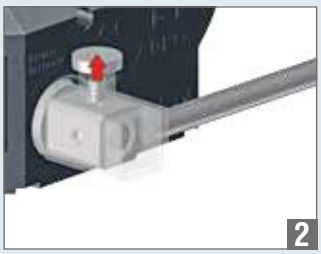

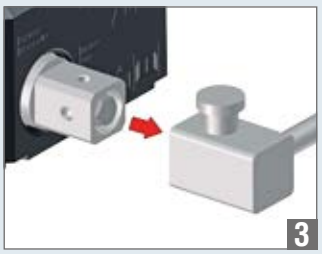



CABLE WINCHES PLUS

350 kg



SAP: WINDE 351PLUS

Cable winch braked – type 351 PLUS

Tensile load max. lowest cable position	350 kg
Manual force	200 N
Minimum load	25 kg
Reduction	2.50 : 1
Lift per crank rotation	From 53 – 100 mm
Drum capacity for 4 mm Ø cable	15 m
Drum capacity for towing band	4 m
	– 120 units

Part no. without cable/band	1 225 998
	2.0 kg

Part no. fitted with 10 m cable for lifting	1 225 999
	3.0 kg

Part no. fitted with 15 m cable for lifting	1 730 001
	3.5 kg

Part no. fitted with 4 m strap for towing	1 730 002
	2.5 kg

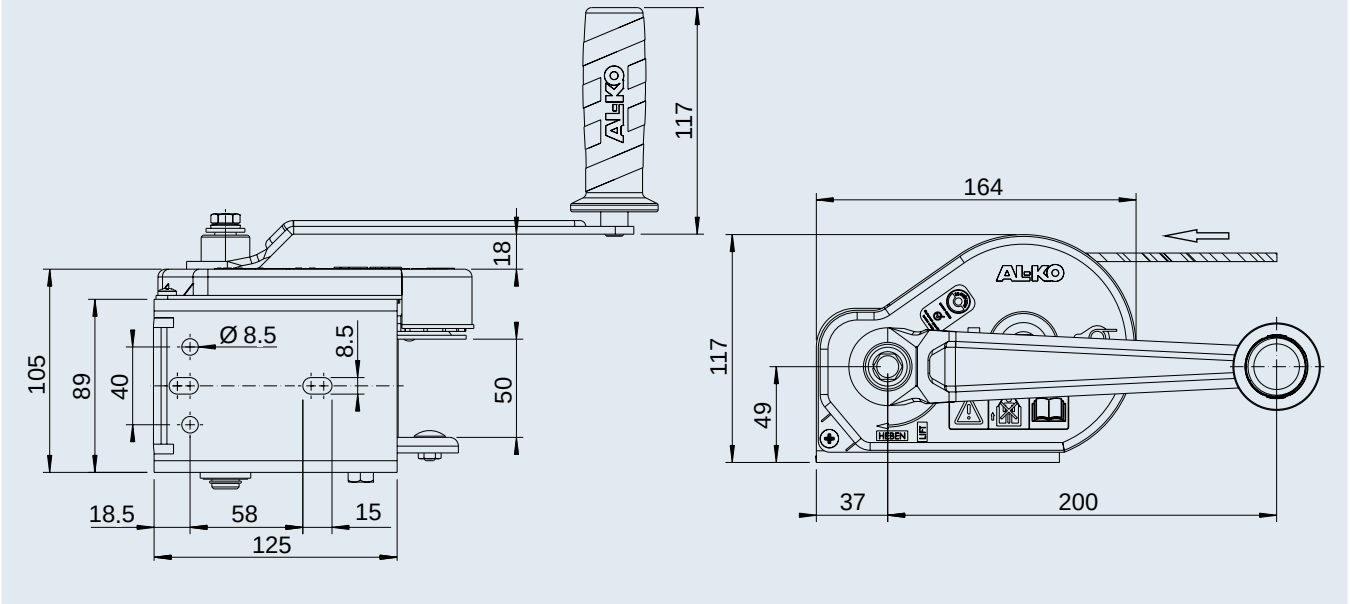

CABLE WINCHES PLUS

500 kg



SAP: WINDE 501PLUS

Cable winch braked – type 501 PLUS	
Tensile load max. lowest cable position	500 kg
Manual force	200 N
Minimum load	25 kg
Reduction	3.75 : 1
Lift per crank rotation	From 45 – 100 mm
Drum capacity for 5 mm Ø cable	20 m
Drum capacity for towing band	7 m
	– 64 units
Part no. without cable/band	1 730 003
	4.0 kg
Part no. fitted with 10 m cable for lifting	1 730 004
	5.0 kg
Part no. fitted with 20 m cable for lifting	1 730 005
	6.0 kg
Part no. fitted with 7 m strap for towing	1 730 006
	5.0 kg

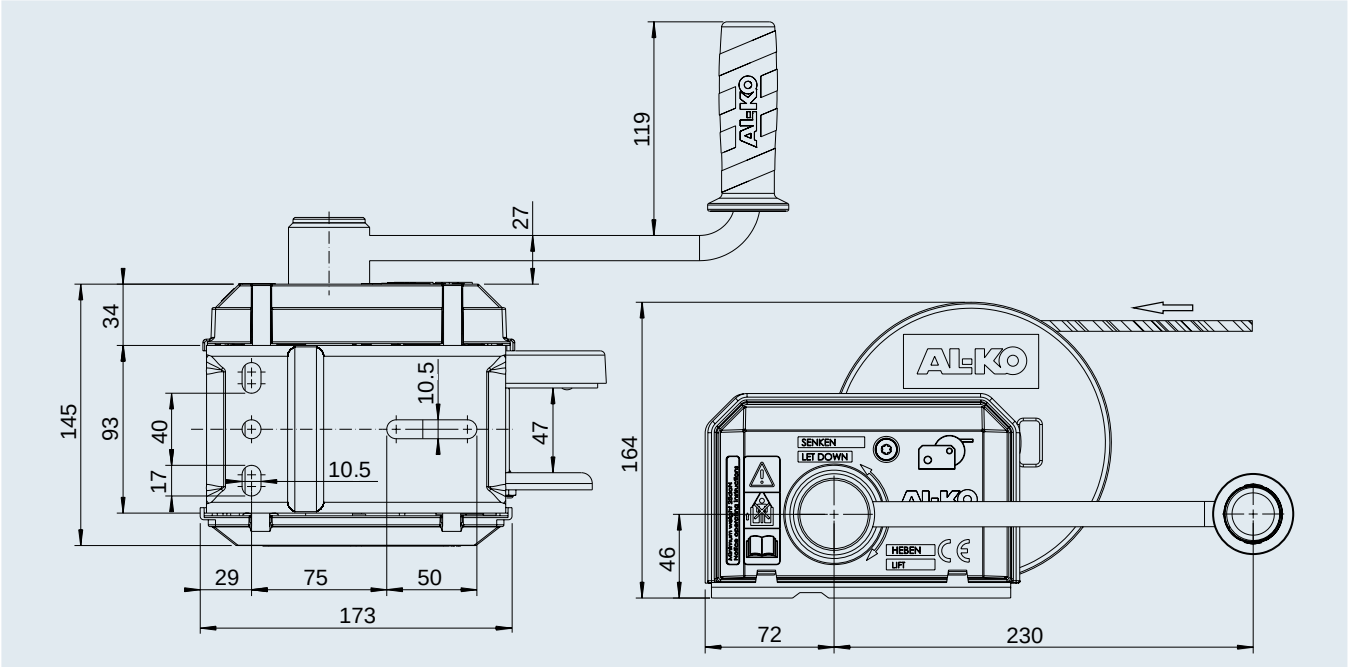

CABLE WINCHES PLUS

500 kg, with automatic unwinder

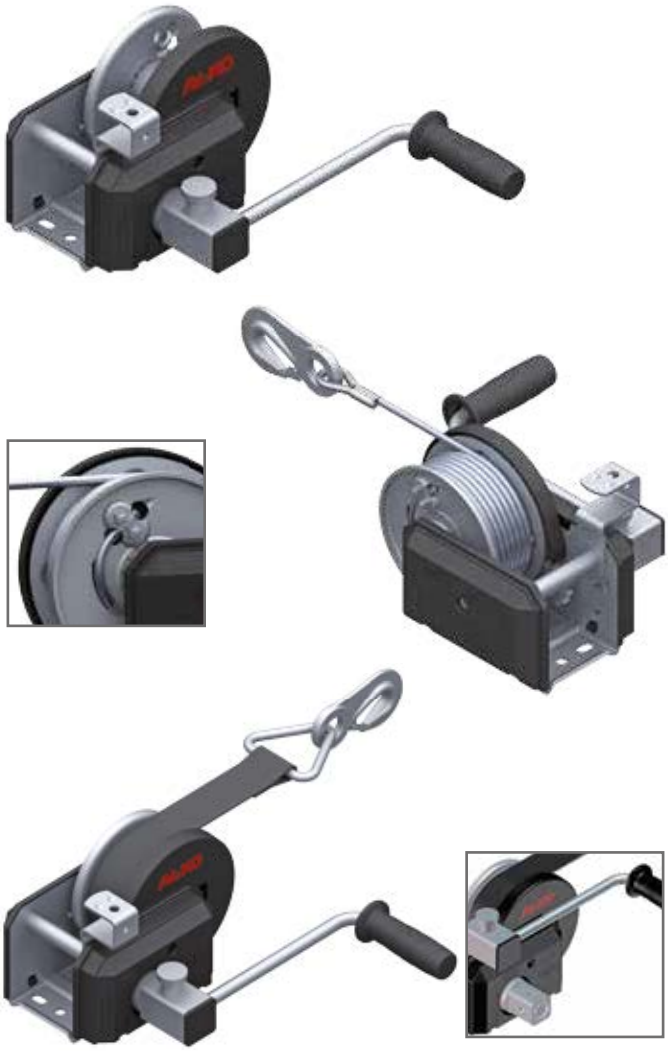

SAP: WINDE 501PLUS A

Cable winch braked – type 501 PLUS with automatic unwinder	
Tensile load max. lowest cable position	500 kg
Manual force	200 N
Minimum load	25 kg
Reduction	3.75 : 1
Lift per crank rotation	From 45 – 100 mm
Drum capacity for 7 mm Ø cable	20 m
Drum capacity for towing band	7 m
	– 64 units
Part no. without cable/band	1 730 024
	4.0 kg
Part no. fitted with 10 m cable for lifting	1 730 007
	5.0 kg
Part no. fitted with 20 m cable for lifting	1 730 008
	6.0 kg
Part no. fitted with 7 m strap for towing	1 730 009
	5.0 kg

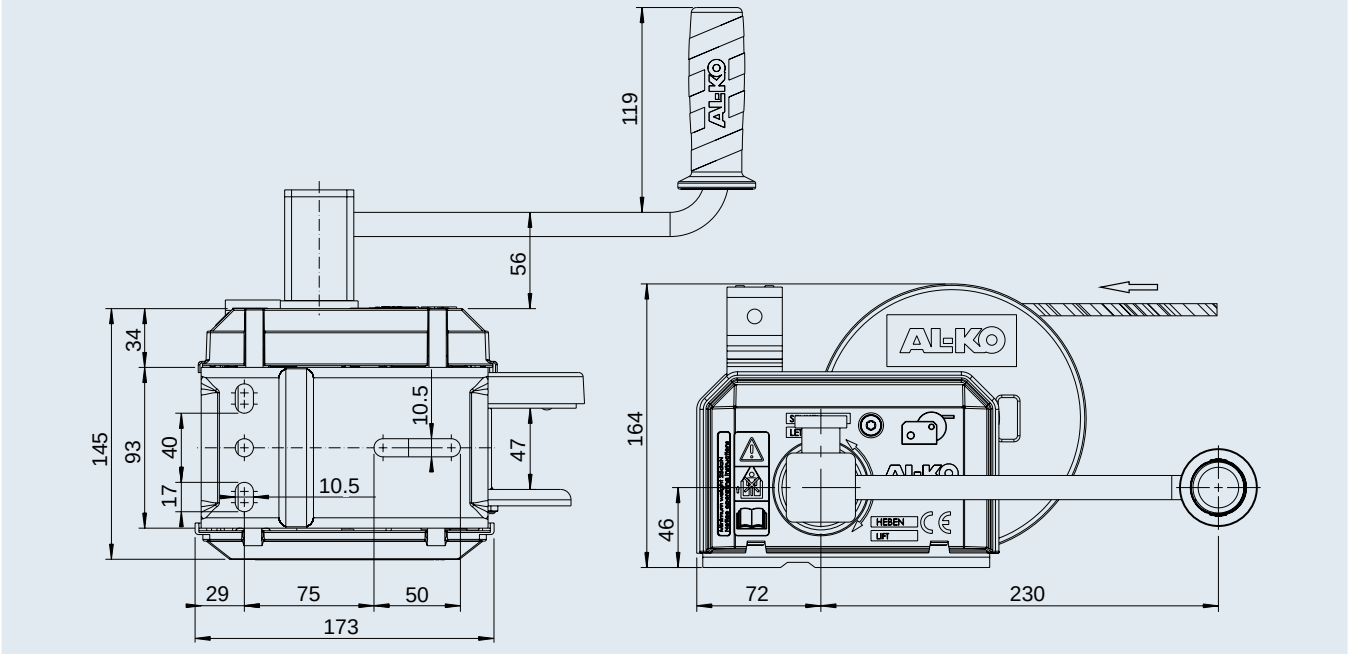

12

CABLE WINCHES PLUS

900 kg



SAP: WINDE 901PLUS

Cable winch braked – type 901 PLUS	
Tensile load max. lowest cable position	900 kg
Manual force	190 N
Minimum load	25 kg
Reduction	8.75 : 1
Lift per crank rotation	From 25 – 55 mm
Drum capacity for 7 mm Ø cable	20 m
Drum capacity for towing band	10 m
	– 39 units
Part no. without cable/band	1 730 010
	7.0 kg
Part no. fitted with 12.5 m cable for lifting	1 730 011
	8.5 kg
Part no. fitted with 20 m cable for lifting	1 730 012
	9.0 kg
Part no. fitted with 10 m strap for towing	1 730 013
	8.0 kg

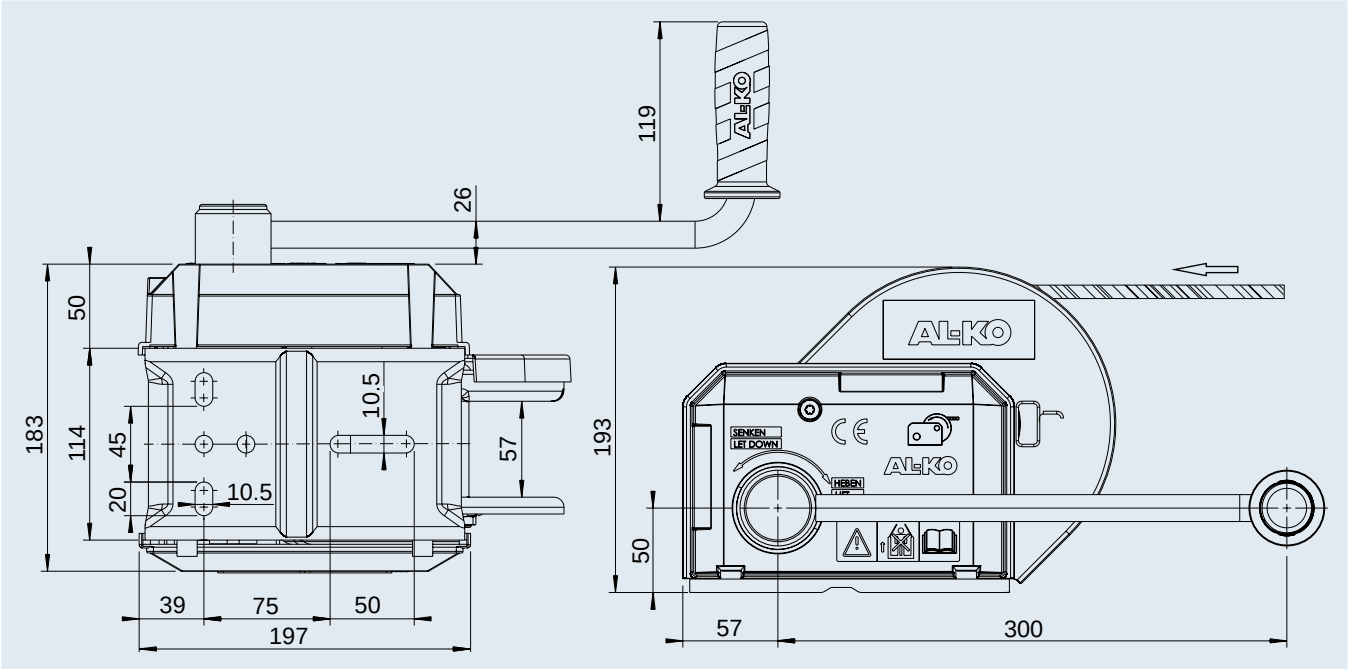

CABLE WINCHES PLUS

900 kg, with automatic unwinder

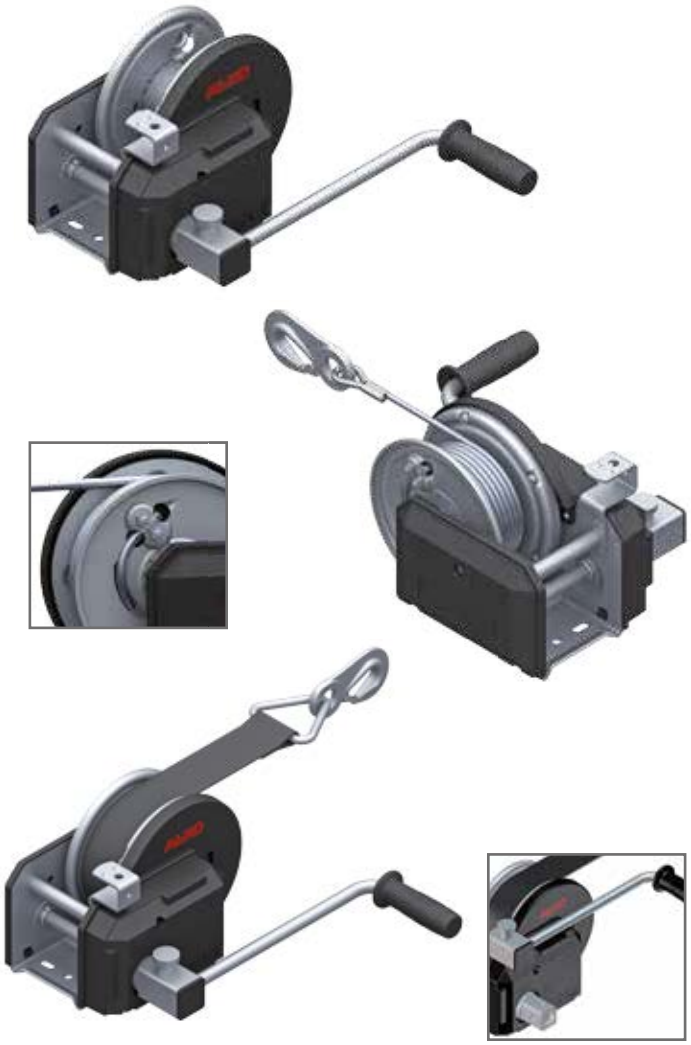

SAP: WINDE 901PLUS A

Cable winch braked – type 901 PLUS with automatic unwinder	
Tensile load max. lowest cable position	900 kg
Manual force	190 N
Minimum load	25 kg
Reduction	8.75 : 1
Lift per crank rotation	From 25 – 55 mm
Drum capacity for 7 mm Ø cable	20 m
Drum capacity for towing band	10 m
	– 39 units

Part no. without cable/band	1 730 014
	8.0 kg

Part no. fitted with 12.5 m cable for lifting	1 730 015
	9.5 kg

Part no. fitted with 20 m cable for lifting	1 730 016
	10.0 kg

Part no. fitted with 10 m strap for towing	1 730 017
	9.0 kg

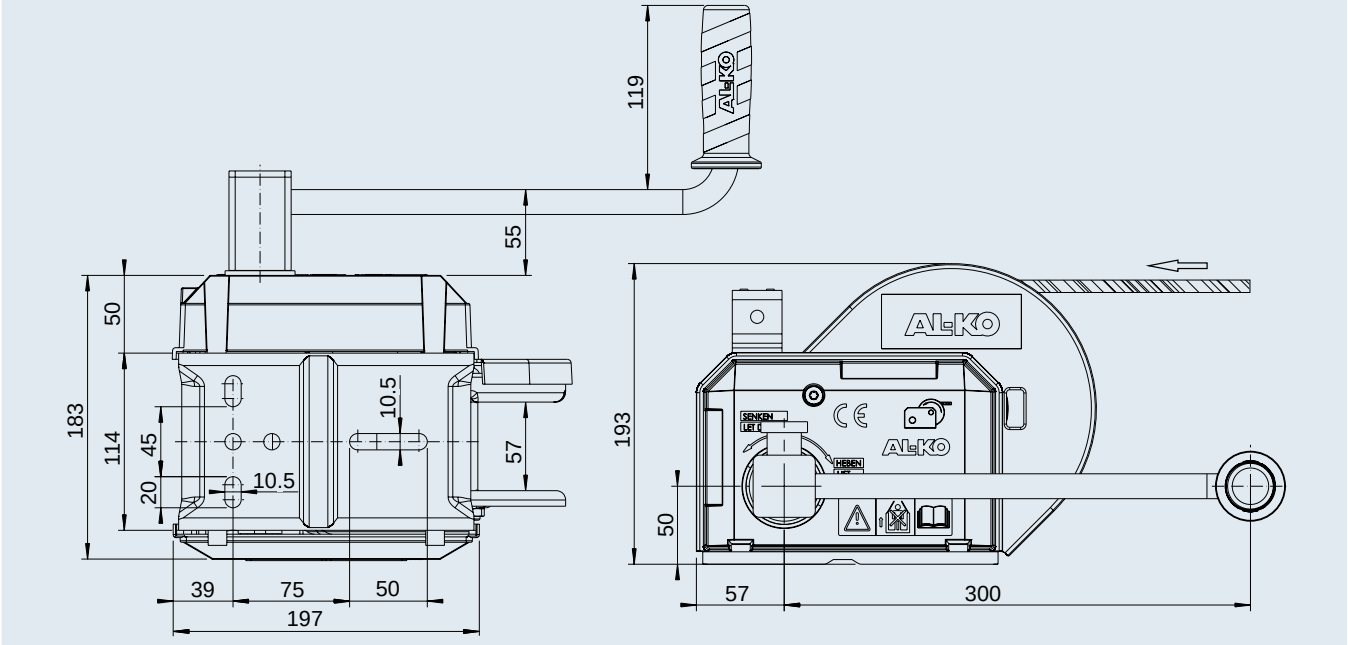

CABLE WINCHES PLUS

1,150 kg, with automatic unwinder



SAP: WINDE 1201PLUS A

Cable winch braked – type 1201 PLUS with automatic unwinder

Tensile load max. lowest cable position	1,150 kg
Manual force	200 N
Minimum load	25 kg
Reduction	10.5 : 1
Lift per crank rotation	From 23 – 57 mm
Drum capacity for 7 mm Ø cable	25 m
Drum capacity for towing band	12.5 m
	– 25 units

Part no. without cable/band	1 730 018
	13 kg

Part no. fitted with 12.5 m cable for lifting	1 730 019
	15 kg

Part no. fitted with 25 m cable for lifting	1 730 020
	17 kg

Part no. fitted with 12.5 m strap for towing	1 730 021
	14 kg

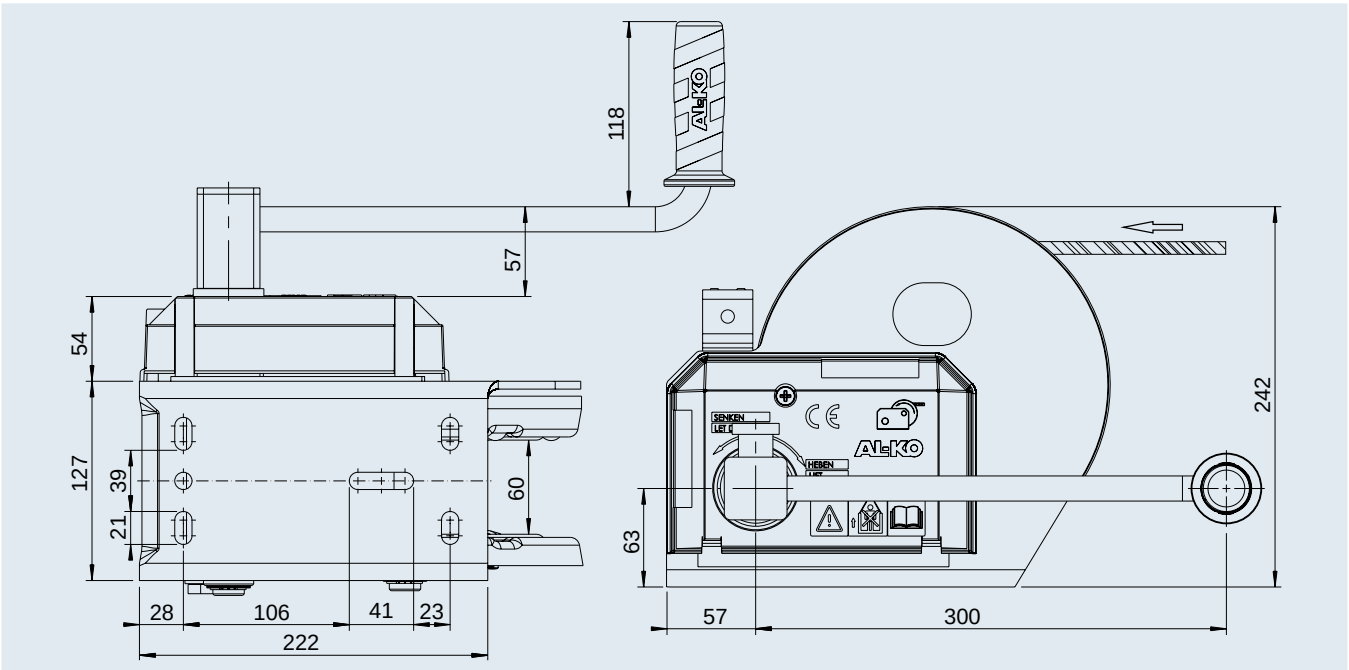

CABLE WINCHES BASIC

with automatic weight brake

YOUR ADVANTAGE

- Automatic weight brake
- Automatic unwinder for rope or band (optional)
- Removable crank (optional)
- Plastic gear cover
- Range:
- 450 and 900 kg
- Surface treatment:
- Galvanised with thick layer passivation, salt spray test approx. 200 hours

WEIGHT BRAKE

Automatic



CABLE WINCH OPERATION

Lifting:	Turn the hand crank in a clockwise direction
Holding:	Let go of the hand crank in the desired position (automatic weight brake)
Lowering:	Turn the hand crank in a counter-clockwise direction



12

AUTOMATIC UNWINDER OPERATION

CE tested

1. Pull up locking sleeve
2. Remove crank
3. Press the red lever and turn (deactivate weight brake)
4. The cable or band can now be removed

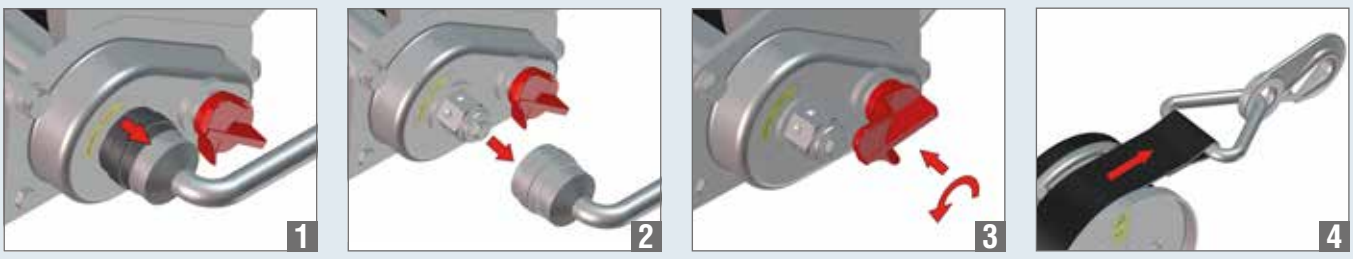

CABLE WINCHES BASIC

450 kg





SAP: WINDE 450 COMP

Cable winch type 450 Compact braked without automatic unwinder	
Part no.	1 210 653
Tensile load max. lowest cable position	450 kg
Manual force	220 N
Minimum load	25 kg
Reduction	3.50 : 1
Lift per crank rotation	From 45 – 100 mm
Drum capacity for 5 mm Ø cable	15 m
Drum capacity for towing band	6 m
	4 kg
	– 100 units

Cable winch type 450 A Basic braked with automatic unwinder	
Part no. without cable	1 225 298
Part no. with 6 m band for towing	1 225 300
Tensile load max. lowest cable position	450 kg
Manual force	220 N
Minimum load	25 kg
Reduction	3.50 : 1
Lift per crank rotation	From 45 – 100 mm
Drum capacity for 5 mm Ø cable	15 m
Drum capacity for towing band	6 m
Weight without cable	4 kg
Weight with 6 m band	5 kg
	– 72 units

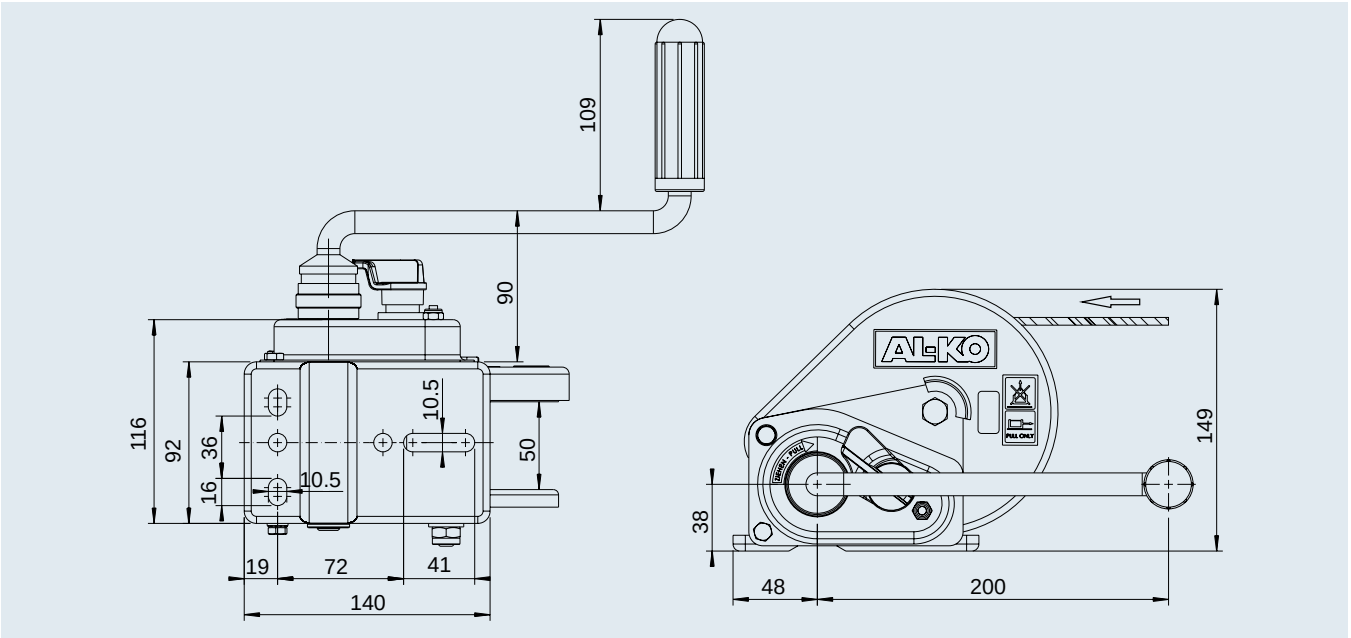

CABLE WINCHES BASIC

900 kg



SAP: WINDE 900 COMP

Cable winch type 900 Compact braked without automatic unwinder	
Part no.	1 210 654
Tensile load max. lowest cable position	900 kg
Manual force	230 N
Minimum load	25 kg
Reduction	8.75 : 1
Lift per crank rotation	From 25 – 53 mm
Drum capacity for 7 mm Ø cable	17 m
Drum capacity for towing band	7 m
	7 kg
	– 48 units



Cable winch type 900 A Basic braked with automatic unwinder	
Part no. without cable	1 225 301
Part no. with 7 m band for towing	1 225 303
Tensile load max. lowest cable position	900 kg
Manual force	230 N
Minimum load	25 kg
Reduction	8.75 : 1
Lift per crank rotation	From 25 – 53 mm
Drum capacity for 7 mm Ø cable	17 m
Drum capacity for towing band	7 m
Weight without cable	7 kg
Weight with 7 m band	8 kg
	– 48 units

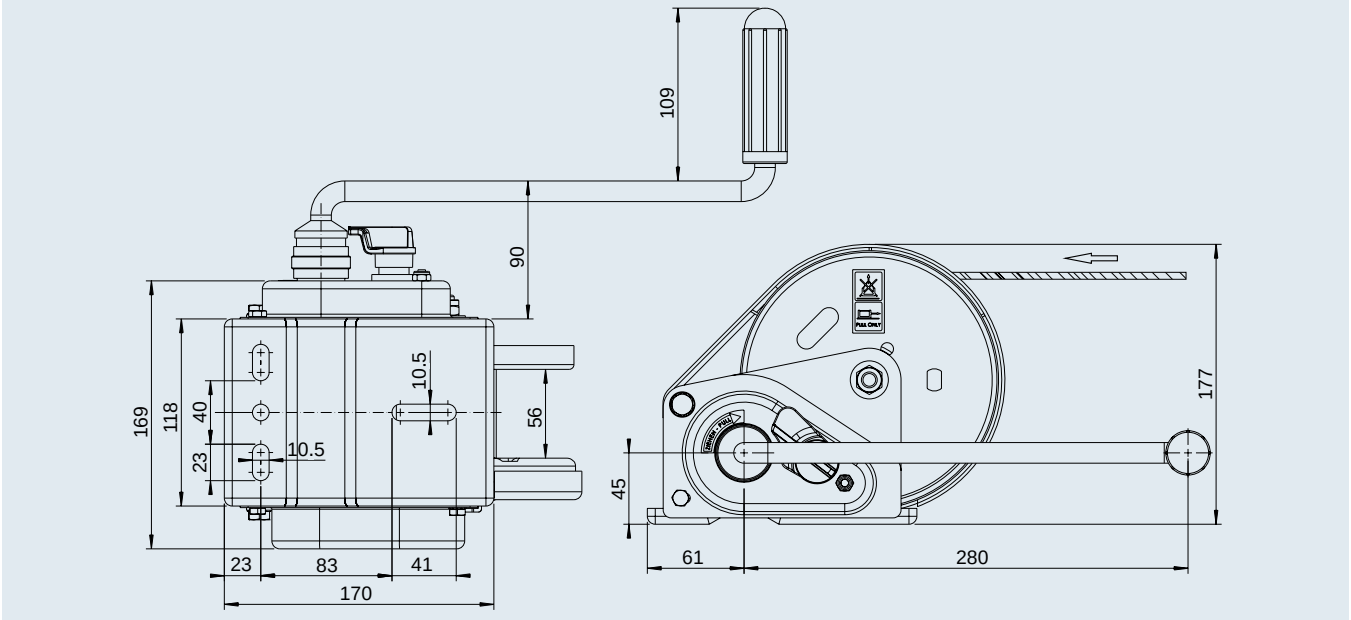

12

TOWING WINCH BASIC

250 kg



SAP: SCHLEPPWINDE 250 MIT SEIL

Towing winch type 250 – unbraked

Part no. with 6 m cable	1 210 211
Max. tensile load	see table
Manual force	250 N
Reduction	none
Lift per crank rotation	From 120 – 150 mm
Drum capacity for 3.5 mm Ø cable	6 m
	3 kg
	- 72 units

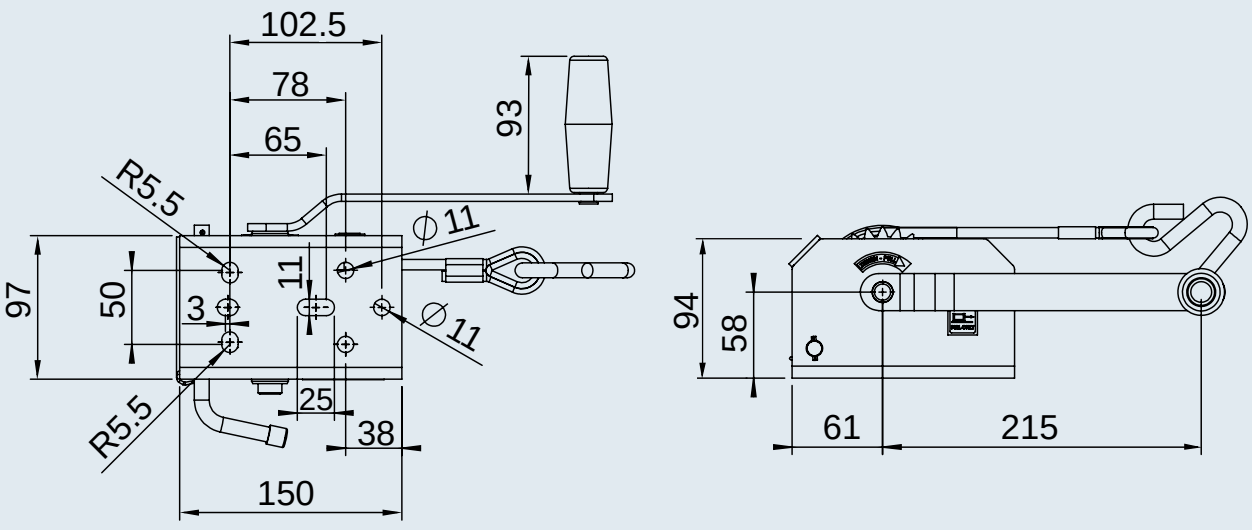

TOWING WINCHES BASIC

500 kg





SAP: SCHLEPPWINDE 500A

Towing winch type 500 A – unbraked, crank removable	
Part no. without cable	1 225 543
Part no. with 7 m strap for towing	1 225 547
Max. tensile load	see table
Manual force	200 N
Reduction	4.25 : 1
Lift per crank rotation	From 37 – 90 mm
Drum capacity for 5 mm Ø cable	15 m
Weight without cable	3 kg
Weight with 6 m band	4 kg
	- 96 units

Towing winch type 500 – unbraked	
Part no. without cable	1 213 856
Max. tensile load	see table
Manual force	200 N
Reduction	4.25 : 1
Lift per crank rotation	From 37 – 90 mm
Drum capacity for 5 mm Ø cable	15 m
	4 kg
	- 96 units

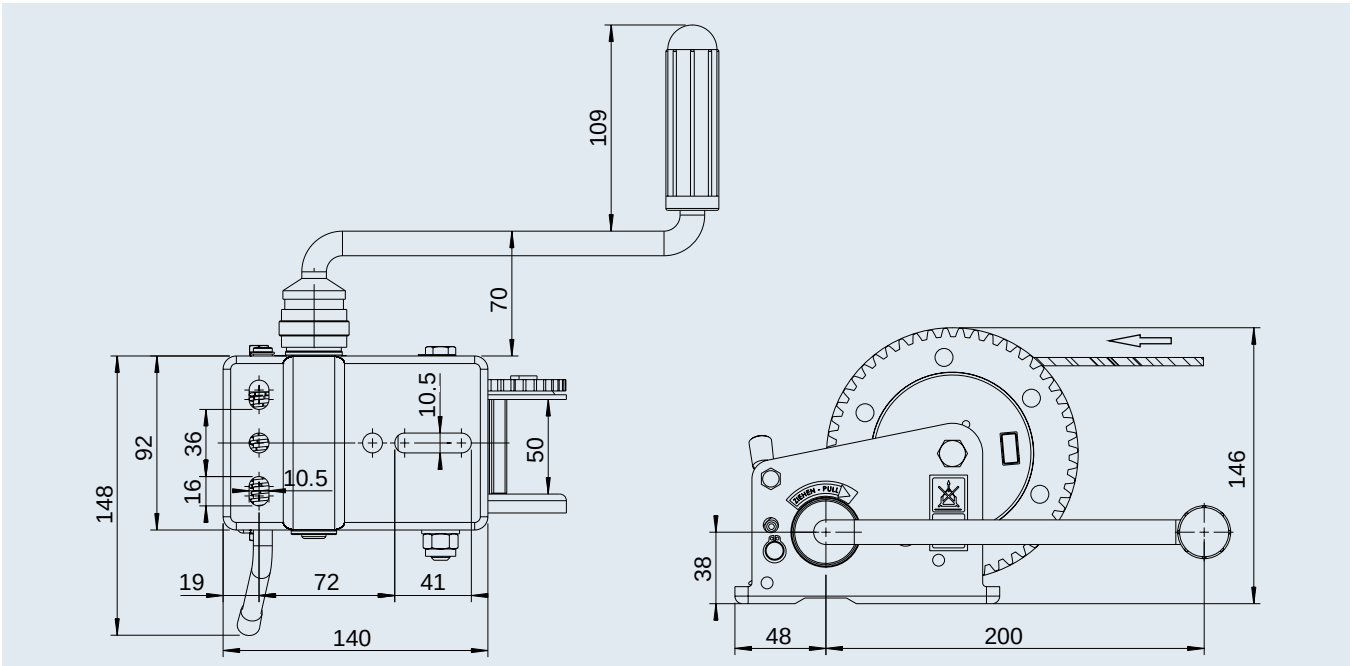

ACCESSORIES

Winches

Cables



Warning:
The cables are suitable for towing, lifting and holding of loads, however not for usage with a free hanging load which may twist when being lifted.
For this application low-twist or twist-free cables should be used.

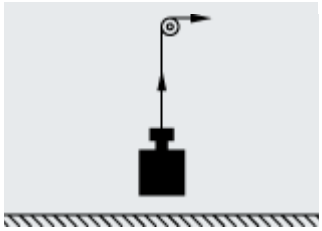

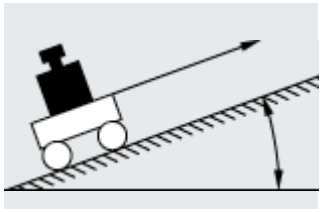

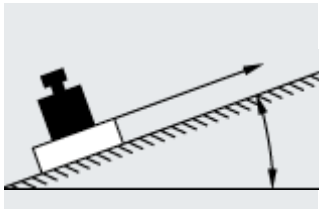

Part no.	for winch type	Tensile load kg	Cable Ø mm EN 12385-4	Band length m	Weight kg	Hook coating
1 730 137	351 PLUS	350	4	15	1.0	galvanised CR 6-free
1 730 136	351 PLUS	350	4	10	1.0	galvanised CR 6-free
1 730 139	501 PLUS	500	5	20	1.8	galvanised CR 6-free
1 730 138	450/500 BASIC 501 PLUS	500	5	10	1.0	galvanised CR 6-free
1 730 141	901 PLUS	900	7	20	4.1	galvanised CR 6-free
1 730 140	901 PLUS 900 BASIC	900	7	12.5	2.1	galvanised CR 6-free
249 980	1201 PLUS	1150	7	25	4.3	galvanised CR 6-free

Bands for towing



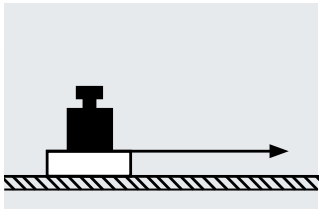

Warning:
The available bands are only constructed for the horizontal towing of loads.
When lifting loads bands in accordance with DIN EN 13157 must be used.

Part no.	for winch type	Max. tensile load band daN kg*	Band width mm	Band length m	Weight kg	Hook coating
1 730 041	351 PLUS	350	40	4	0.5	galvanised CR 6-free
1 730 043	501 PLUS	500	40	7	0.9	galvanised CR 6-free
1 730 032	901 PLUS	900	50	10	1.2	galvanised CR 6-free
1 730 042	1201 PLUS	1150	55	12.5	1.5	galvanised CR 6-free
1 225 319	450 BASIC	450	40	6	0.9	galvanised CR 6-free
1 225 768	501 PLUS 500 BASIC	500	40	7	1.0	galvanised CR 6-free
1 225 631	901 PLUS 900 BASIC	900	50	7	1.2	galvanised CR 6-free

*The tensile load corresponds with the tensile load of the winch in the lowest cable position. Band with safety factor min. 2.5

Weather protection



Your advantage
- Weather-resistant
- Breathable
- Colour-fast

Weather protection	
Part no.	1 730 824
Suitable for winches	AL-KO PLUS types 901 and 901 A
Weight	0.3 kg

ACCESSORIES

Winches

Plug-in for band fastening

Part no.	for winch type
1 730 133	351 PLUS
1 730 134	501 PLUS
1 730 135	901 PLUS



Part no.	for winch type
352 657	1201 PLUS



Part no.	for winch type
352 514	450 BASIC & towing winch 500
352 516	900 BASIC



Garage wall holder

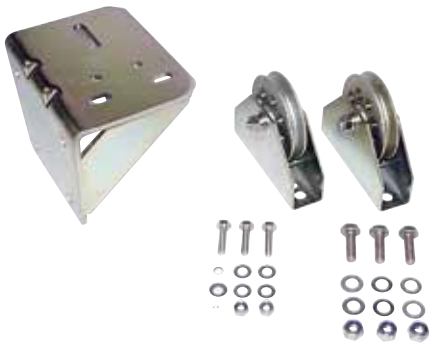



Garage wall holder	
Part no.	1 221 151
For AL-KO winch types	BASIC and PLUS up to max. 500 kg
Weight	3.5 kg

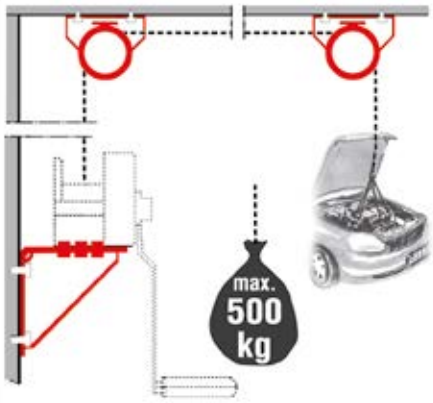

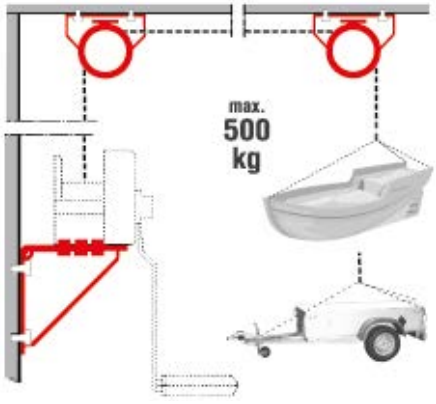

TECHNICAL DATA

Cable winches

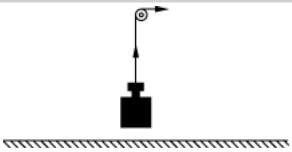

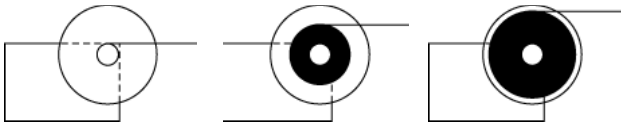

Vertical lifting of loads – (reference values)

Winch	Lowest cable position	Middle cable position	Highest cable position
BASIC cable winch 450 kg	450 kg	300 kg	170 kg
BASIC cable winch 900 kg	900 kg	600 kg	330 kg
PLUS cable winch 350 kg	350 kg	250 kg	150 kg
PLUS cable winch 500 kg	500 kg	330 kg	170 kg
PLUS cable winch 900 kg	900 kg	600 kg	330 kg
Cable winch PLUS 900 kg automatic unwinder	900 kg	600 kg	330 kg
Cable winch PLUS 1,150 kg automatic unwinder	1,150 kg	830 kg	500 kg

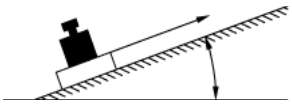

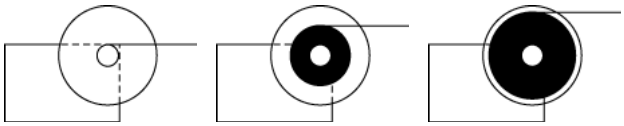

Horizontal and angled pulling of a (non-rolling) load (reference values) friction factor approx. 0.5

Winch	Slope	Lowest cable position	Middle cable position	Highest cable position
BASIC towing winch 250 kg	0% (0°)	400 kg	300 kg	200 kg
BASIC towing winch 500 kg	0% (0°)	800 kg	550 kg	300 kg
BASIC cable winch 450 kg	10% (6°)	750 kg	500 kg	300 kg
	20% (11°)	650 kg	450 kg	250 kg
	30% (17°)	550 kg	400 kg	200 kg
BASIC cable winch 900 kg	10% (6°)	1,500 kg	1,000 kg	550 kg
	20% (11°)	1,300 kg	900 kg	500 kg
	30% (17°)	1,150 kg	800 kg	400 kg
PLUS cable winch 350 kg	10% (6°)	600 kg	400 kg	250 kg
	20% (11°)	500 kg	350 kg	200 kg
	30% (17°)	450 kg	300 kg	150 kg
PLUS cable winch 500 kg	10% (6°)	800 kg	550 kg	300 kg
	20% (11°)	700 kg	500 kg	250 kg
	30% (17°)	650 kg	450 kg	220 kg
PLUS cable winch 900 kg	10% (6°)	1,500 kg	1,000 kg	550 kg
	20% (11°)	1,300 kg	900 kg	500 kg
	30% (17°)	1,150 kg	800 kg	400 kg
Cable winch PLUS 900 kg automatic unwinder	10% (6°)	1,500 kg	1,000 kg	550 kg
	20% (11°)	1,300 kg	900 kg	500 kg
	30% (17°)	1,150 kg	800 kg	400 kg
Cable winch PLUS 1150 kg automatic unwinder	10% (6°)	2,000 kg	1,400 kg	850 kg
	20% (11°)	1,700 kg	1,250 kg	750 kg
	30% (17°)	1,500 kg	1,100 kg	650 kg

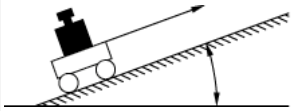

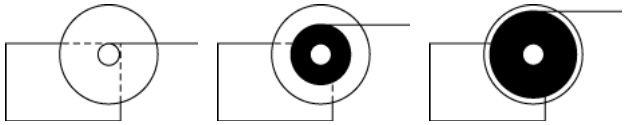

Angled pulling of a rolling load – (reference values)

Winch	Slope	Lowest cable position	Middle cable position	Highest cable position
Cable winch BASIC 450 kg	10% (6°)	2,900 kg	2,000 kg	1,100 kg
	20% (11°)	1,800 kg	1,200 kg	700 kg
	30% (17°)	1,350 kg	900 kg	500 kg
BASIC cable winch 900 kg	10% (6°)	5,800 kg	3,900 kg	2,100 kg
	20% (11°)	3,600 kg	2,400 kg	1,300 kg
	30% (17°)	2,700 kg	1,800 kg	1,000 kg
PLUS cable winch 350 kg	10% (6°)	2,300 kg	1,600 kg	800 kg
	20% (11°)	1,400 kg	1,000 kg	500 kg
	30% (17°)	1,100 kg	800 kg	400 kg
PLUS cable winch 500 kg	10% (6°)	3,300 kg	2,200 kg	1,100 kg
	20% (11°)	2,000 kg	1,300 kg	700 kg
	30% (17°)	1,500 kg	1,000 kg	500 kg
PLUS cable winch 900 kg	10% (6°)	5,800 kg	3,900 kg	2,100 kg
	20% (11°)	3,600 kg	2,400 kg	1,300 kg
	30% (17°)	2,700 kg	1,800 kg	1,000 kg
Cable winch PLUS 900 kg automatic unwinder	10% (6°)	5,800 kg	3,900 kg	2,100 kg
	20% (11°)	3,600 kg	2,400 kg	1,300 kg
	30% (17°)	2,700 kg	1,800 kg	1,000 kg
Cable winch PLUS 1,150 kg automatic unwinder	10% (6°)	7,400 kg	5,300 kg	3,200 kg
	20% (11°)	4,800 kg	3,300 kg	2,000 kg
	30% (17°)	3,500 kg	2,500 kg	1,500 kg

SAFETY

The buyer of the cable winch must check whether the product has the properties that their individual usage requires.

1. Weight brake:
Depending on the type, cable winches with weight brakes must be operated with the minimum weight specified in the delivery overview. If this minimum load is not met then the braking function does not come into force.

2. Applications of a braked cable winch:
The braked cable winches fulfil the requirements of the new EG Norm EN 13157 valid from 01.09.2004. Our winches cannot be used in the following fields of application: Construction lifts, stages, studios and liftable suspended access equipment.

Mechanical drive prohibited.
Not approved for continuous operation.
Not approved as lashing provision.
(Weight brake can release itself due to alternating movement).
The AL-KO cable winches can be used for various applications. The regulations that need to be observed in these fields of application must be
checked by the manufacturer or user responsible for this application. I.e. the buyer of the cable winch must check whether the product has the properties that their individual usage requires. The service life will vary depending on the load (low, medium, max. load). To increase the service life it is advantageous to use the cable winches only for medium loads. Select the higher capacity winch type if necessary.

It is strictly prohibited to stand beneath overhead loads. At least two winds of the rope must stay on the drum when carrying a load.

3. Cables:
The available cables are constructed according to EN 13157 and EN 12385-4. Our cables are suitable for towing, lifting and holding of loads, however not for usage with a free hanging load which may twist when being lifted. For this application low-twist or twist-free cables should be used.

4. Bands:
The available bands are only constructed for the horizontal towing of loads.
When lifting loads bands in accordance with DIN EN 13157 must be used.

13. TAILGATE LATCHES



TAILGATE LATCHES

Winterhoff

Tailgate latches and mounting brackets	526 – 527
Tailgate hinges and mounting brackets	528 – 529
Lever fasteners and mounting brackets	530
Lashings	531

TAILGATE LATCHES

and mounting brackets


BV 10-1

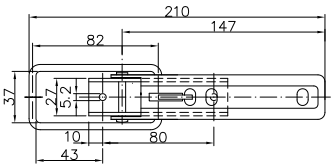

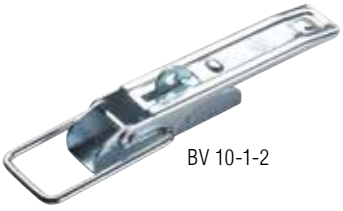
BV 10-1-2

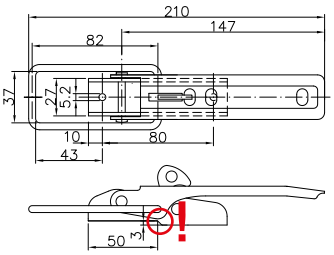


BV 10-2

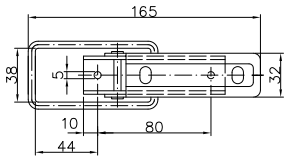


BV 20-1

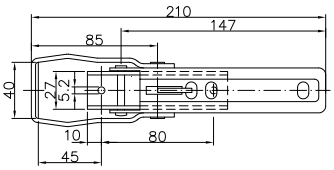


BV 20-3

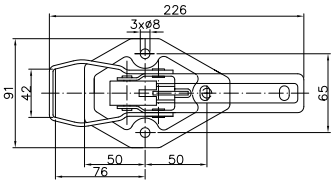


BV 40-1

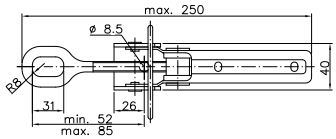


BV 60-1

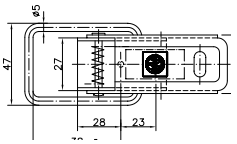


BV 70-1

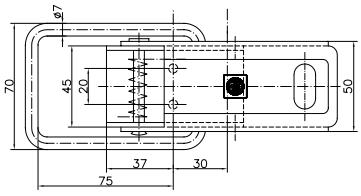


BV 90-1

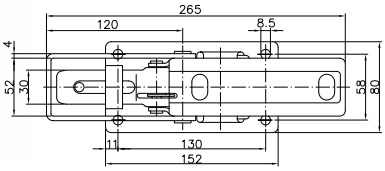


BVS 60-1
(single key)

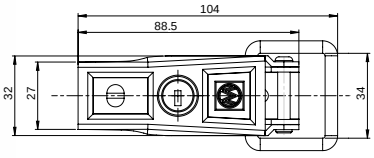

TÜV Nord certificate: extant **Surface treatment: Galvanised** Zn

	matching mounting bracket	Part no. Single	Piece	Part no. VPE	Piece	Tensile strength in Nm	Single	VPE	
Tailgate latch BV 10-1 (*W 6700*)	❶	1860019	1	1860020	60	900	0.26	15.6	2
Tailgate latch BV 10-1-2 (*W 6701*)	❶	1860021	1	1860022	60	900	0.26	15.3	2
Tailgate latch BV 10-2 (*W 6702*)	❶	1860023	1	1860024	70	650	0.22	15.05	2
Tailgate latch BV 20-1 (*W 6704*)	❷	1860025	1	1860026	45	800	0.30	13.5	2
Tailgate latch BV 20-3 (*W 6708*)	❷	1860027	1	1860028	30	900	0.47	13.95	2
Tailgate latch BV 40-1 (*W 6712*)	❸	1860029	1	1860030	50	1,100	0.41	20.50	2
Tailgate latch BV 60-1 (*W 6716*)	❹	1860031	1	1860032	150	500	0.11	15.75	2
Tailgate latch BV 70-1 (*W 6718*)	❺	1860033	1	1860034	50	1,000	0.36	18.0	2
Tailgate latch BV 90-1 (*W 6722*)	❻	1860035	1	1860036	10	1,100	1.09	10.85	2
Tailgate latch lockable BVS 60-1 (*W 6725*)	❼	1860037	1 pair	1860038	50 pair	650	0.16	16.0	2



EXZV 10-1

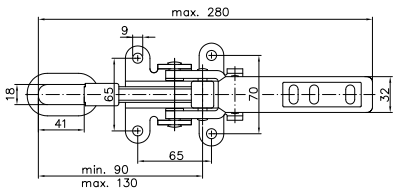

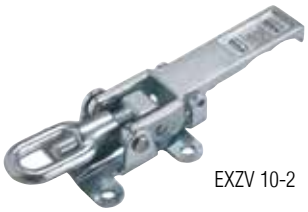

EXZV 10-2

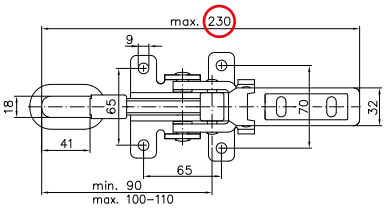



Mounting bracket
❶ BVG 10-A

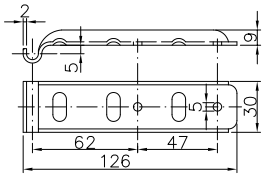



Mounting bracket
❶ BVG 10-B

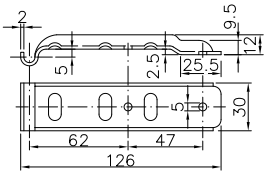



Mounting bracket
❷ BVG 20-A

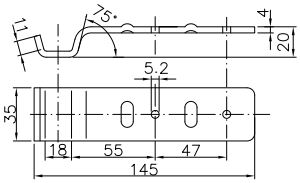



Mounting bracket
❷ BVG 20-B

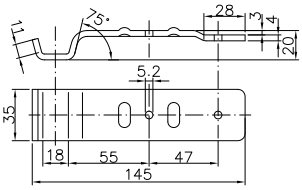



Mounting bracket
❸ BVG 40-A

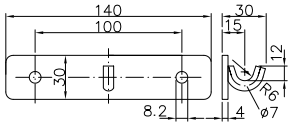



Mounting bracket
❹ BVG 60-A

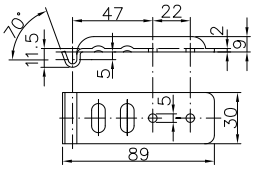



Mounting bracket
❺ BVG 70-A

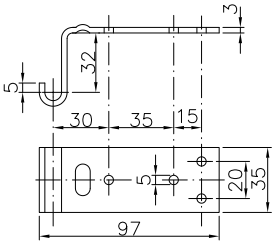



Mounting bracket (R)*
❻ BVG 90-A

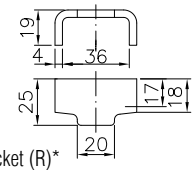



Mounting bracket
❼ BVSG 60-A

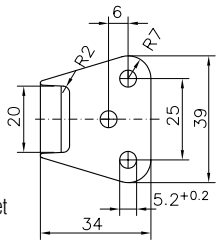

13

TÜV North certificate: extant

Surface treatment: Galvanised Zn

	matching mounting bracket	Part no. Single	Piece	Part no. VPE	Piece	Tensile strength in Nm	Single	VPE	
Toggle lock EXZV 10-1 (*W 6780*)		1860067	1	1860068	20	1,000	0.92	9.2	2
Toggle lock EXZV 10-2 (*W 6782*)		1860069	1	1860070	20	1,000	0.89	17.7	2
❶ Mounting bracket to tailgate latch BVG 10-A (*W 8600*)		1860071	1	1860072	180	300	0.08	14.4	2
❶ Mounting bracket to tailgate latch BVG 10-B (*W 6802*)		1860073	1	1860074	180	300	0.08	14.4	2
❷ Mounting bracket to tailgate latch BVG 20-A (*W 6804*)		1860075	1	1860076	90	450	0.17	15.3	2
❷ Mounting bracket to tailgate latch BVG 20-B (*W 6806*)		1860077	1	1860078	90	450	0.17	15.3	2
❸ Mounting bracket to tailgate latch BVG 40-A (*W 6812*)		1860079	1	1860080	100	650	0.16	16.0	2
❹ Mounting bracket to tailgate latch BVG 60-A (*W 6816*)		1860081	1	1860082	300	300	0.06	16.5	2
❺ Mounting bracket to tailgate latch BVG 70-A (*W 6818*)		1860083	1	1860084	200	450	0.11	22.0	2
❻ Mounting bracket to tailgate latch BVG 90-A (*W 6822*)		1860085	1	1860086	400	–	0.04	16.0	2
❼ Mounting bracket to strap BVG 60-A (*W 6825*)		1860087	1	1860088	200	500	0.03	6.0	2

TAILGATE HINGES

and mounting brackets



BSCH 10-12-90

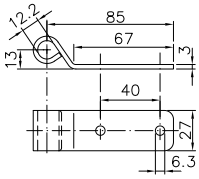



BSCH 10-14-120-PO

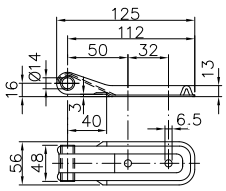



BSCH 10-14-170
BSCH 10-17-170

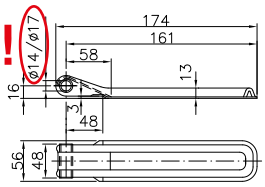



BSCH 10-17-170-SO

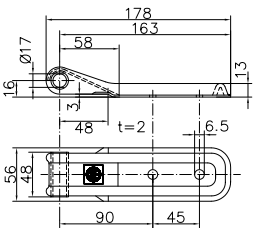



BSCH 10-17-220

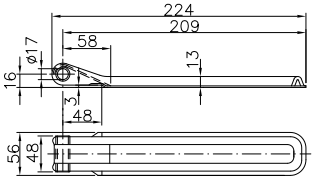



BSCH 10-17-270

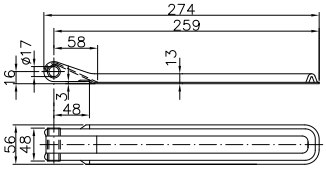



BSCH 10-17-270-SO

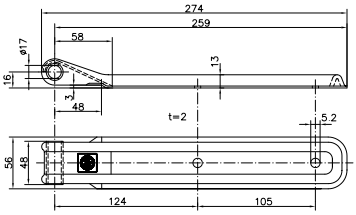



BSCH 10-17-320

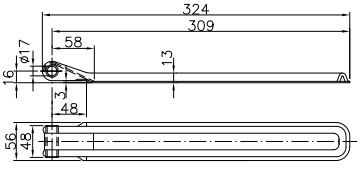



BSCH 30-1

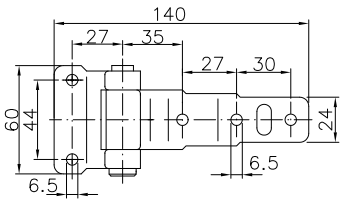



BSCH 30-2

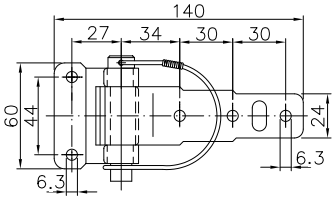

Surface treatment: Galvanised Zn

	matching mounting bracket	Part no. Single	Piece	Part no. VPE	Piece	Single	VPE	
Tailgate hinge BSCH 10-12-90 (*W 6955*)		1860141	1	1860142	250	0.09	21.25	2
Tailgate hinge BSCH 10-14-120-PO (*W 6910*)	⑩	1860111	1	1860112	100	0.17	17.0	2
Tailgate hinge BSCH 10-14-170 (*W 6915*)	⑩	1860113	1	1860114	50	0.27	13.25	2
Tailgate hinge BSCH 10-17-170 (*W 6916*)	⑪	1860115	1	1860116	50	0.28	14.0	2
Tailgate hinge BSCH 10-17-170-SO (*W 6917*)	⑪	1860117	1	1860118	50	0.25	12.5	2
Tailgate hinge BSCH 10-17-220 (*W 6920*)	⑪	1860121	1	1860122	50	0.30	14.9	2
Tailgate hinge BSCH 10-17-270 (*W 6930*)	⑪	1860127	1	1860128	50	0.36	18.0	2
Tailgate hinge BSCH 10-17-270-SO (*W 6935*)	⑪	1860131	1	1860132	50	0.36	18.0	2
Tailgate hinge BSCH 10-17-320 (*W 6940*)	⑪	1860133	1	1860134	50	0.41	20.6	2
Tailgate hinge BSCH 30-1 (*W 6900*)		1860107	1	1860108	70	0.21	14.35	2
Tailgate hinge BSCH 30-2 (*W 6956*)		1860143	1	1860144	80	0.23	18.4	2



BSCH 30-3



BSCH 30-5



BSCH 40-1



BSCH 50-8-1



Insert locking pin
BSCHG 20-A

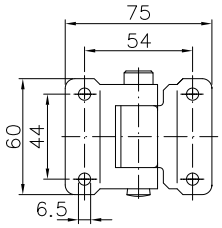

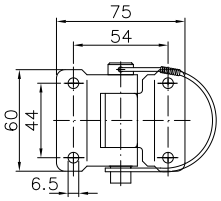

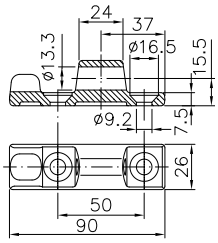

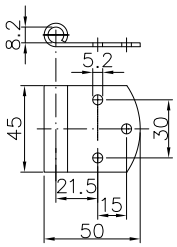

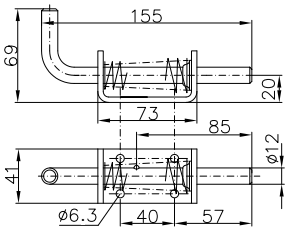



Mounting bracket
⓫ BSCHG 10-17-A



Bolt for mounting bracket
⓫ BSCHG 10-17-B



Mounting bracket (no bolt)
⓫ BSCHG 10-17-B



Mounting bracket
⓫ BSCHG 10-17-C

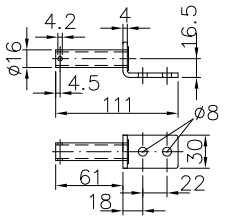

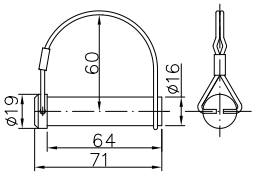

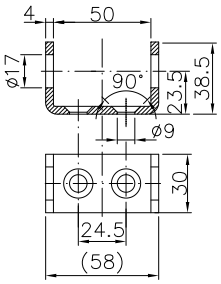

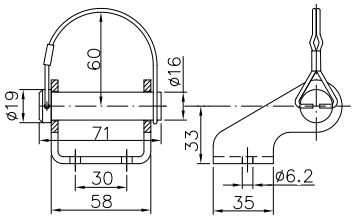



Mounting bracket
⓬ BSCHG 40-A

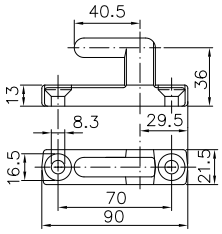



Plate for mounting bracket
⓬ BSCHG 40-A

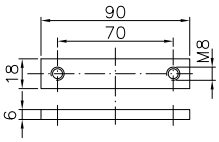



Mounting bracket (R)*
⓾ BSCHG 10-14-E

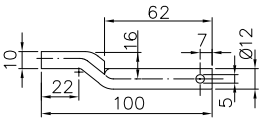



Mounting bracket
⓭ BSCHG 50-8-A

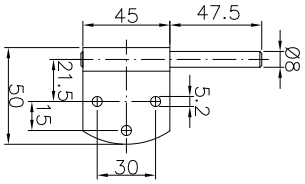

Surface treatment: Galvanised Zn

13

	Matching mounting bracket	Part no. Single	Piece	Part no. VPE	Piece	Single	VPE	
Tailgate hinge BSCH 30-3 (*W 6903*)		1860109	1	1860110	100	0.19	19.0	2
Tailgate hinge BSCH 30-5 (*W 6958*)		1860145	1	1860146	100	0.21	21.0	2
Tailgate hinge BSCH 40-1 (*W 6970*)	⓬	1860149	1	1860150	60	0.17	10.2	2
Tailgate hinge BSCH 50-8-1 (*W 6865*)	⓭	1860099	1	1860100	200	0.05	10.0	2
Locking pin BSCHG 20-A (*W 6845*)		1860095	1	1860096	60	0.34	20.4	2
⓫ Mounting bracket to tailgate hinge BSCHG 10-17-A (*W 6830*)		1860089	1	1860090	100	0.12	11.5	2
⓫ Bolt for mounting bracket BSCHG 10-17-B (*W 6838*)		1860091	1	1860092	100	0.13	12.5	2
⓫ Mounting bracket to tailgate hinge BSCHG 10-17-B (no bolt) (*W 6839*)		1860093	1	1860094	100	0.09	9.0	2
⓫ Mounting bracket to tailgate hinge BSCHG 10-17-C (*W 6850*)		1860097	1	1860098	50	0.28	14.0	2
⓬ Mounting bracket to tailgate hinge BSCHG 40-A (*W 6870*)		1860101	1	1860102	60	0.24	14.4	2
⓬ Plate for mounting bracket to tailgate hinge BSCHG 40-A (*W 6871*)		1860103	1	1860104	60	0.07	4.2	2
⓾ Mounting bracket to tailgate hinge BSCHG 10-14-E (*W 6890*)		1860105	1	1860106	150	0.09	13.5	2
⓭ Mounting bracket to tailgate hinge BSCHG 50-8-A (*W 6959*)		1860147	1	1860148	200	0.09	18.0	2

LEVER FASTENERS

and mounting brackets

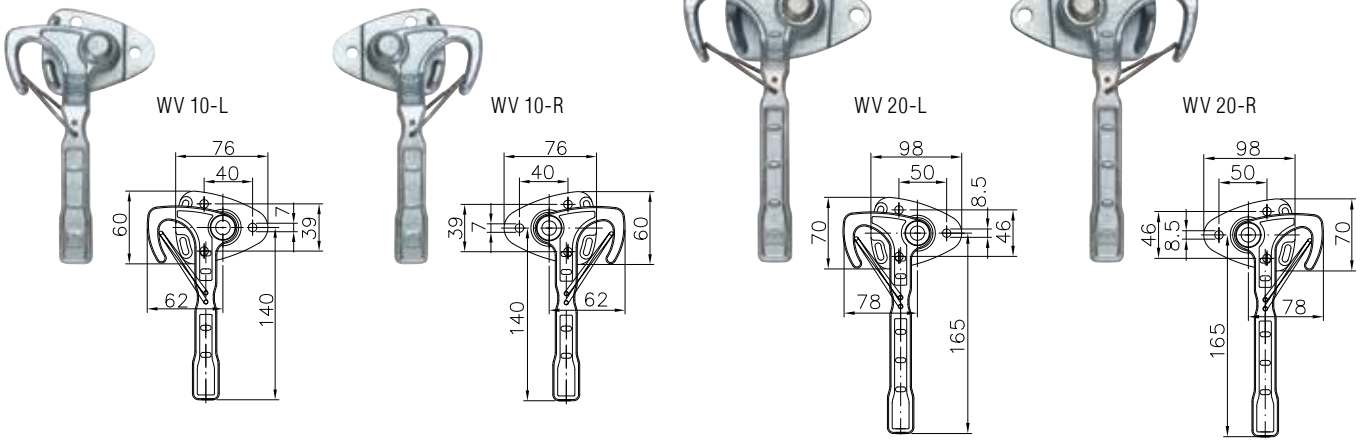

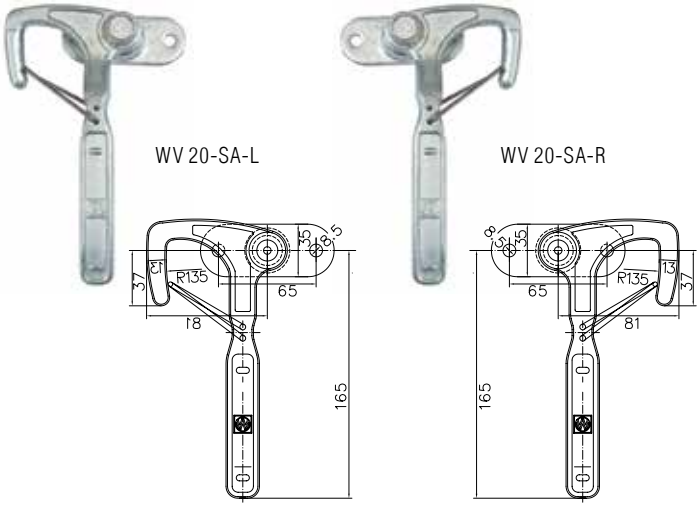

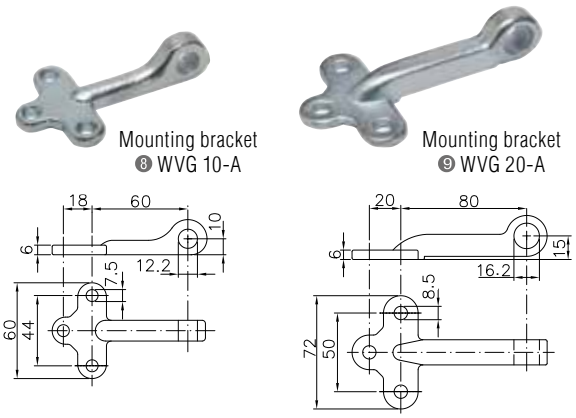

TÜV North certificate: extant **Surface treatment: Galvanised** Zn

	matching mounting bracket	Part no. Single	Piece	Part no. VPE	Piece	Tensile strength in Nm	Single	VPE	
Lever fastener WV 10-L (*W 6602*)	❽	1860003	1	1860004	40	800	0.43	17.2	2
Lever fastener WV 10-R (*W 6600*)	❽	1860001	1	1860002	40	800	0.45	18.0	2
Lever fastener WV 20-L (*W 6612*)	❾	1860007	1	1860008	20	1,000	0.64	12.8	2
Lever fastener WV 20-R (*W 6610*)	❾	1860005	1	1860006	20	1,000	0.64	12.8	2
Lever fastener WV 20-SA-L (*W 6616*)		1860011	1	1860012	20	1,000	0.55	10.9	2
Lever fastener WV 20-SA-R (*W 6614*)		1860009	1	1860010	20	1,000	0.55	10.9	2
❽ Mounting bracket WVG 10-A (*W 6650*)		1860013	1	1860014	80	1,000	0.12	9.2	2
❾ Mounting bracket WVG 20-A (*W 6660*)		1860017	1	1860018	40	1,200	0.21	8.4	2

LASHING



ZBF 10-PO

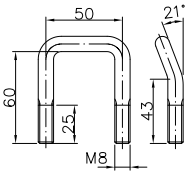



ZBF 20-PO

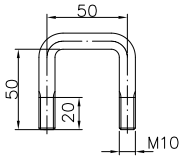



ZBF 30-PO

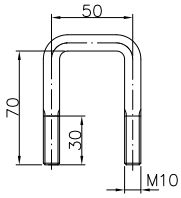



ZBF 10-SD

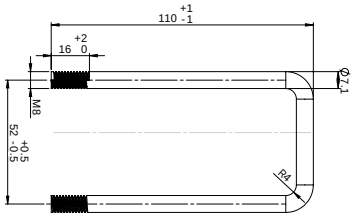



ZBF 50-1

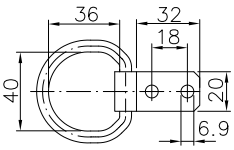



ZBF 60-1

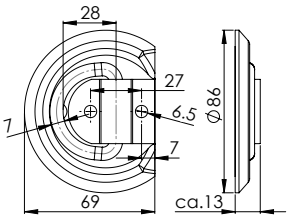



ZBF 70-1

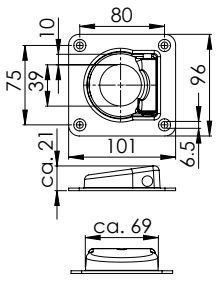



ZBF 70-2

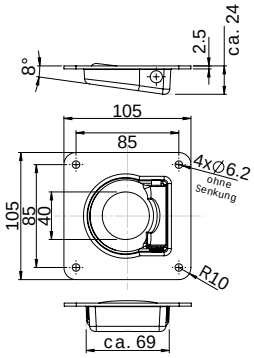



⓮ Plate for mounting bracket ZBF 10-PO

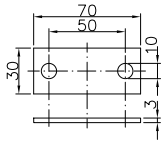



⓯ Plate for mounting bracket ZBF 20-PO

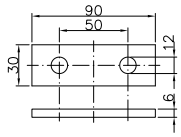

13

TÜV North certificate: extant

Surface treatment: Galvanised Zn

	matching mounting bracket	Part no. Single	Piece	Part no. VPE	Piece	Tensile strength in Nm	Single	VPE	
Lashing ZBF 10-PO (*W 6750*)	⓮	1860039	1	1860040	250	800	0.06	15.0	2
Lashing ZBF 20-PO (*W 6751*)	⓯	1860041	1	1860042	150	1,000	0.08	12.0	2
Lashing ZBF 30-PO (*W 6752*)		1860043	1	1860044	150	1,000	0.11	16.5	2
Lashing ZBF 10-SD (*W 6755*)		1860047	1	1860048	150	800	0.08	12.0	2
Lashing ZBF 50-1 (*W 6756*)		1860049	1	1860050	250	240	0.06	15.0	2
Lashing ZBF 60-1 (*W 6770*)		1860059	1	1860060	150	400	0.13	8.75	2
Lashing ZBF 70-1 (*W 6775*)		1860061	1	1860062	50	800	0.38	18.75	2
Lashing ZBF 70-2 (*W 6776*)		1860063	1	1860064	50	800	0.40	20.0	2
⓮ Plate for mounting bracket ZBF 10-PO (*W 6760*)		1860053	1	1860054	250	–	0.05	11.25	2
⓯ Plate for mounting bracket ZBF 20-PO (*W 6763*)		1860057	1	1860058	75	–	0.11	8.25	2

14. MANOEUVRING SYSTEMS









MANOEUVRING SYSTEMS

Mammut 534 - 537

Ranger 538 - 541

MAMMUT / MAMMUT TANDEM

The clever manoeuvring system for caravans

The AL-KO Mammut manoeuvring system makes light work of positioning a caravan. Whether on rough ground or inclines, the system moves the vehicle easily and effectively.



YOUR ADVANTAGE

Comfort

- Easy finger tip control and manoeuvring thanks to the soft start and soft stop technology.
- Immediately stops on inclines: Automatically stops the caravan as soon as the joystick is released.

Power

- On the spot manoeuvring with intuitive one handed operation
- Infinitely variable control
- Powerful movement: Easily moves up inclines up to 28% and can overcome kerbs and obstabcles upto 4cm high
- Maximum contact pressure applied to the wheels by the automatic wind on function of the rollers

Safety

- **Maximum ground clearance** when mounted directly to the chassis
- Lightweight single axle chassis mounted variant weighs 32kg (not inc battery)
- Plug & Play installation on AL-KO chassis embossed with "M" for Mammut (SA from model year 2010, TA from model year 2015)
- Torsional rigidity provided by the integrated cross member
- Robust solid metal housing with metal gear unit
- Drive fully sealed, splash-proof (IP 65)
- No TÜV registration required
- Made in Germany
- Worldwide service network
- **5-year warranty** (according to AL-KO Warranty Conditions)

BESTE MARKEN 2018 1. PLATZ AL-KO Rangiersysteme CARAVANING

KÖNIG KUNDE AWARD 2017 1. PLATZ IN DER ZUBEHÖR-KATEGORIE RANGIERSYSTEME caravans Europas kompetente Fachzeitschrift

5 Jahre Garantie gemäß AL-KO Garantiebedingungen
5 years warranty according to AL-KO warranty conditions

360° turns

Soft start Soft stop

Obstacles up to 4 cm

Gradients up to 28 %

Infinitely variable control



Robust aluminium drives with double-mounted drive rollers. Perfect protection against damage and moisture (IP 65).



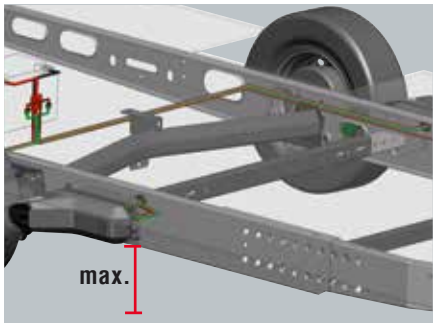



AL-KO chassis with the embossed “M” on the longitudinal frame (SA from model year 2010, TA from model year 2015) have standard mounting holes for the MAMMUT system. The cross member required for stability does not take up any space under the chassis. This ensures **maximum ground clearance**.

Easy one-handed operation



Adjustable speed and direction control via joystick
If the joystick is only moved horizontally to the right or left, the caravan pivots on the spot in the required direction. Releasing the joystick immediately stops the wheels.

Automatic wind off of motors from the wheels

Automatic wind on of motors onto the wheels



LED status displays



System is ready to operate

Maximum climbing ability reached

Maximum drive temperature reached

Battery status of the hand held transmitter

Status of leisure battery



Magnetic switch for activating the transmitter

Fingertip Manoeuvring
Only the AL-KO MAMMUT offers a caravan manoeuvring system with joystick control. Fingertip control to easily steer, accelerate and stop the caravan.



14

Playing it safe
The system must be paired to prevent inadvertent operation. The remote control is simply held against the sensor on the drawbar to activate the system.

Optimal grip
Each motor unit features two independent motors. One to drive the system onto the wheel, the second to manoeuvre the caravan. The system applies the correct amount of pressure to the tyres to give optimum manoeuvrability in all weathers and on all surfaces.

Soft start and soft stop
Gentle, soft start and soft top technology ensures no sudden uncontrolled movements.

Immediate stop on downhill gradients
As soon as the joystick is released, the trailer is braked and remains stationary on the slope.

MAMMUT / MAMMUT TANDEM

Design Philosophy

YOUR ADVANTAGE
Overview of other Performance Features

- **Protection against misuse:** Pairing the handset to the motors using the magnetic switch prevents misuse.
- **Automatic engagement of drive motors.** The built in electronics ensure that maximum contact is achieved between the drive motors and the tyres to provide optimum grip and manoeuvrability.
- **Immediate stop** on the slope as soon as the joystick is released
- **On the spot manoeuvring** 360° on the spot manoeuvring
- **Maximum speed** approx. 0.5 km/h
- **LED displays in remote handset** for: System ready, maximum climbing ability on inclines reached, maximum drive temperature reached, battery status of remote handset, battery status of drive
- **Infinitely variable speed control** by joystick
- **Infinitely variable steering** via the joystick
- **Manual** removal mechanism in case of power failure
- **Splash and saltwater protection (IP65)for motor and electronics**
- **Robust drive rollers which protect the tyres**
- **Diagnostics system** remove diagnostic interface in the vehicle
- **CAN bus-capable**
- **Power consumption**: Peak current 120 A (SA) / 240 A (TA), quiescent current max. 5 mA
- **No TÜV registration**



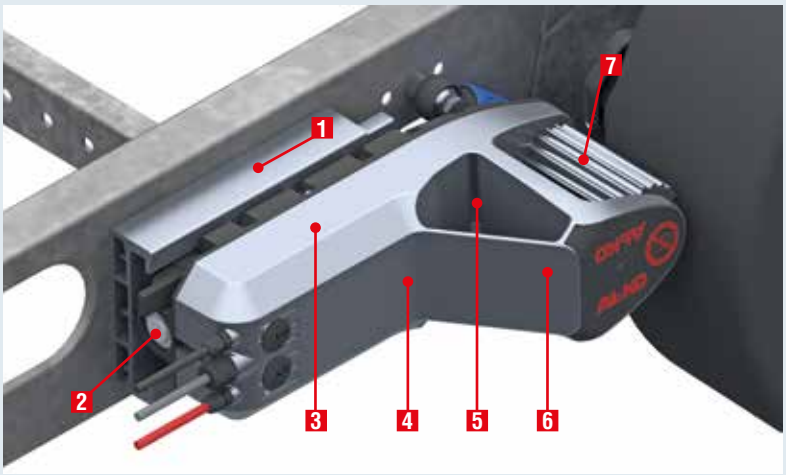

1 Mounting adapter
for fixing MAMMUT to the chassis

2 Manual Removal
One direction emergency removal option

3 Control unit
Housed inside the motor unit

4 Motor for driving unit onto tyres
Encased inside housing

5 Motor for manoeuvring the caravan
The powerful robust motor is encased inside the housing

6 Aluminium housing
Sealed unit to IP65 to protect against splash water ingress.

7 High-grip aluminium rollers to protect the tyres

MAMMUT / MAMMUT TANDEM

Installation options / accessory recommendation

Integrated Chassis Variant

For maximum ground clearance. For AL-KO chassis with the M design on the longitudinal frame (single axle trailer from year of manufacture 2010, tandem from year of manufacture 2014). In most cases, the mounting holes for MAMMUT will be provided as standard. AL-KO MAMMUT can be mounted in front of the axle to give more protection to the motor units from stone chips and road debris. Maximum ground clearance is achieved using this mounting option.



Under Chassis Variant

This variant is for chassis manufactured before 2010 and does not have the mounting holes pre-drilled in the chassis members. MAMMUT is mounted to the caravan using a clamping cross brace that runs underneath the chassis. This fitment variant reduces ground clearance by approximately 50mm and can fitted either in front or behind the axle.

Simple installation

Bolt both drive units onto the chassis through the cross member. Connect the positive and negative cables to the leisure battery. Position the magnetic switch on the A-Frame cover. The control unit is protected inside the motor unit and requires not installation or seperate wiring.
The tandem version features a small control box that can be mounted conveniently inside the caravan.

Accessory recommendation

Battery/charger

We recommend maintenance-free AGM batteries with suitable and matching charging technology. In caravans with a permitted gross weight up to 1800 kg without additional consumers (e.g. light, water pump), AGM batteries with a capacity of at least 80 Ah.
With a permitted gross weight of more than 1800 kg, for tandem caravans or for caravans with additional consumers, AGM batteries with a capacity of at least 100 Ah.
AGM batteries with spiral cell technology should have a capacity of at least 66 Ah (SA without autonomy) or 75 Ah (TA or SA with autonomy).

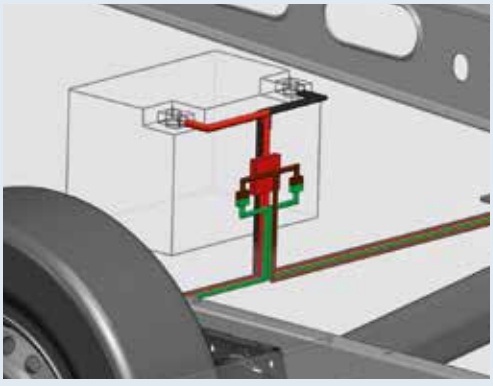

Jockey wheel

Manoeuvring systems can subject jockey wheels to excessive load on soft ground and uneven surfaces.
Narrow wheels will dig into the soft or loose ground.
Therefore, AL-KO recommends using a wider jockey wheel. The AL-KO Premium Jockey wheel is the recommended partner for all manoeuvring systems due to its wider, harder wheel with integrated suspension and its higher loading capacity of in excess of 200 kg.



RANGER / RANGER TANDEM

The clever manoeuvring system for caravans

AL-KO QUALITY AND DESIGN AT AN AFFORDABLE PRICE

The new, powerful entry model for single axle caravans up to 1.8 tonnes and tandem caravan up to 2.5 tonnes.
Millimetre-precise manoeuvring without needing anyone's help.
Even on uneven terrain.

- AL-KO quality and design
- Climbing power up to 18 % (long inclines) / over 18 % (short inclines, e.g. drive-on ramp)
- Perfect and tested AL-KO CHASSIS connection from Europe's chassis market leader
- Soft start and soft stop
- Ergonomic remote control with lanyard
- Suitable for almost any caravan up to 1.8 t (single axle) or 2.5 t (tandem)
- Protected mechanics
- Worldwide service network
- 5-year warranty (according to AL-KO Warranty Conditions)









360° turns

Soft start
Soft stop

Obstacles up to 2 cm

Inclines up to 18 %





MY SUITABLE MANOEUVRING SYSTEM

MAMMUT	RANGER
Electric control	Manual control
Joystick remote control	Button remote control
M-connection / Underneath connection	Underneath connection
Aluminium housing (IP65)	Plastic housing
Electronics in drive	Electronics in caravan (storage space)
Aluminium rollers on both sides	Aluminium rollers on both sides
5-year warranty	5-year warranty
Gross weight of caravan*: 2.25 t / 3.0 t	Gross weight of caravan*: 1.8 t / 2.5 t
Maximum climbing power up to 28 %	Maximum climbing power up to 18 %

* Single-axle / Tandem

Our tip:
RANGER and UP4 are unbeatable in a package, because both systems can be operated with just one remote control!
See chapter 10



"MAMMUT" MANOEUVRING SYSTEM

Type	Weight kg	Part no.
M20	32	1 730 367
S21 S22	42 42	1 730 368 1 730 369

Max. permitted gross weight caravan 2.25 t, max. climbing ability (gross weight): 15% (2.0 t) / 17% (1.8 t) / 28% (1.2 t)

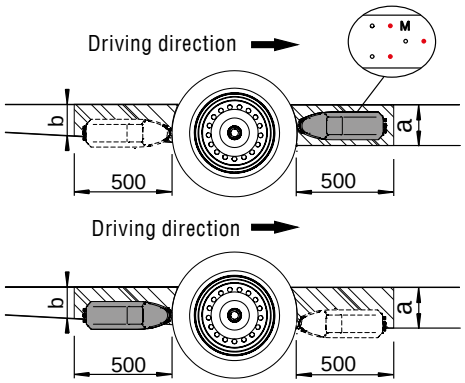

	Installation in front of axle		Installation behind axle		
	"M" in front of axle from model year 2010		"M" behind axle		
	Yes	No		No	
Height a > 184 mm Height a = 125-184 mm Height a < 125 mm	M20 S22 ***S23***	S21 S22 ***S23***		S21 S22 ***S23***	Height b > 184 mm Height b = 125-184 mm Height b < 125 mm

Height a / b: Bottom edge of the frame until interference contour (steps, water pipe, etc.)
Cursive versions = note ground clearance, consultation and installation by AL-KO + dealer

Type	Weight kg	Part no.
TM400 TM410 TM420	67 kg 77 kg 77 kg	1 730 287 1 730 288 1 730 289
TM401 TM402	74 kg 74 kg	1 730 238 1 730 054
TS411 TS412 / TS421 TS422	84 kg 84 kg 84 kg	1 730 237 1 730 233 1 730 049

Max. permitted gross weight caravan 3.0 t, max. climbing power on inclines (gross weight): 15% (3.0t)

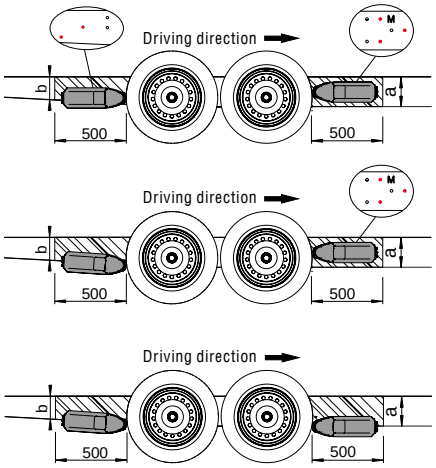

Installation in front of + behind axle					
	"M" in front of axle from model year 2010		2 holes behind the axle as per fig. (from model year 2015)		
	Yes	No	Yes	No	
Height a > 184 mm	TM400 TM401 TM402 ***TM403***		X X	 X X X	Height b > 125 mm Height b > 184 mm Height b = 125-184 mm Height b < 125 mm
Height a > 184 mm	TM410	 TS411 TS412 ***TS413***	X 	 X X X	Height b > 125 mm Height b > 184 mm Height b = 125-184 mm Height b < 125 mm
Height a = 125–184 mm	TM420 TS421 TS422 ***TS423***	 TS421 TS422 ***TS423***	X X	 X X X	Height b > 125 mm Height b > 184 mm Height b = 125-184 mm Height b < 125 mm
Height a < 125 mm	***TM430*** TS431 ***TS432*** ***TS433***	 TS431 ***TS432*** ***TS433***	X X	 X X X	Height b > 125 mm Height b > 184 mm Height b = 125-184 mm Height b < 125 mm

Height a / b: Bottom edge of the frame until interference contour (steps, water pipe, etc.)
Cursive versions = note ground clearance, consultation and installation by AL-KO + dealer

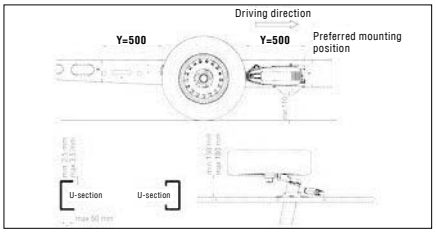

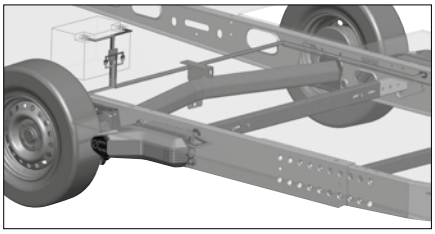

M20 (fig. MAMMUT)

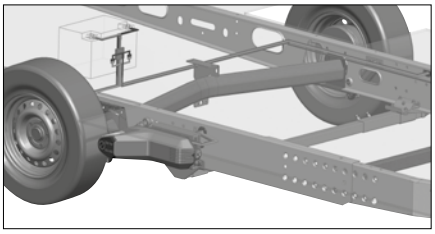

S21 (fig. MAMMUT)

The S and TS variants can be used for AL-KO and third-party chassis under the following conditions:
The frame profile must be a U or C profile and have a material thickness of 2.5 to 3.5 mm. The distance between outside edge of the frame to the inside of the tyre must be a min. 130 mm for the Mammut and a min. 85 mm for the Ranger. The remaining ground clearance must be a min. of 110 mm.

"RANGER" MANOEUVRING SYSTEM

Type	Axles	Weight kg	Part no.
S21 **(single axle trailer)**	1	37	1 731 051
TS411 **(tandem)**	2	74	1 731 211

Max. perm. gross caravan weight: 1.8 t (S21) / 2.5 t (TS411); max. climbing power 18 % at 1.5 t (S21) or 1.8 t (TS411)

Clearance (a/b) min. 193 mm from the bottom edge of the frame until interfering contour (steps, water pipe etc.). For clearance less than 193 mm, use distance plates item no. 1731063 (see installation accessories).

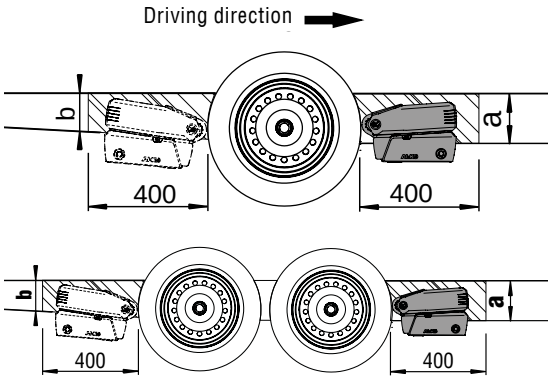

OPTIONAL INSTALLATION ACCESSORIES “MAMMUT / RANGER”

Add-on kit for variant S/TS*	Contents	Recommended for MAMMUT	Recommended for RANGER	Part no.
Add-on kit AL-KO Vario III AV / IV AV (installation behind the axle, reinforcement of frame profile 2 mm)**	2 reinforcement plates with fixing bolts	X	X	1224882
Add-on kit AL-KO Vario III AV / IV AV (installation in front of the axle, overlapping adapter)***	2 adapter plates with fixing bolts	–	X	1731042
Add-on kit AL-KO Vario II (installation in front of the axle, overlapping adapter)***	2 adapter plates with fixing bolts	–	X	1731044
Add-on kit for frame height (X) less than 185 mm and more than 150 mm	3 x 2 spacer plates each 10 mm with fixing bolts	X	–	1224883
Add-on kit for frame height (X) less than 193 mm and more than 147 mm****	2 spacer plates each 15 mm with fixing bolts	–	X	1731063

* the area of application of the variant S / TS can be expanded with add-on kits.
** if required, with spacer plates 1224883 or 1731063 *** if required, with spacer plates 1731063 **** can be combined with a max. of 3

15. ELECTRONICS





ELECTRONICS

ATC Trailer-Control 544 – 545

2LINK Connectivity System 546 – 547

Technical data 548

FAQ 549

ATC TRAILER-CONTROL

Anti-snaking system for caravans and trailers

DCC Technik Award
Deutscher Camping-Club e.V.
www.camping-club.de

YOUR ADVANTAGE

Permanent safety when driving with a vehicle combination!
Anyone who has already encountered critical driving situations with their vehicle combination will know how sensitively trailers or caravans react at high speeds – and what dangers can threaten!
Minor lane change manoeuvres, side winds on bridges or wind pressure when overtaking trucks can cause the trailer to start swinging. There is a significant danger of the trailer "snaking" and becoming uncontrollable.
Anyone who has experienced the benefits of AL-KO Trailer-Control will never again want to tow a vehicle without the aid of the electronic braking system.
For your car you can trust ESP and for your caravan you can rely on ATC.

ATC keeps the caravan under control!
ATC functions simply and effectively, bringing the caravan back into line in the event of instability. The system is permanently monitoring the driving characteristics of the caravan.
The sensors inside ATC trailer control monitors for sudden lateral movements of the caravan and can react sooner than ESP in the car to be ready to take control and slow the combination down and regain control.
The system applies the brakes on the trailer to gain control without any input from the driver. A few seconds of braking action are sufficient to bring the outfit under control and back into a safe condition.

Put your trust in ATC and contact your insurance company to ask for a discount on the premiums for your caravan.
May not be relevant in your country.

The combination starts to swing. ATC sensors measure the slightest read lateral movements directly on the axle of the trailer.

The ATC immediately brakes the trailer automatically. The driver barely notices the electronically controlled correction.

Within a few seconds ATC has brought the vehicle combination back under control and driving safely. The caravan is brought back into line and under control automatically.

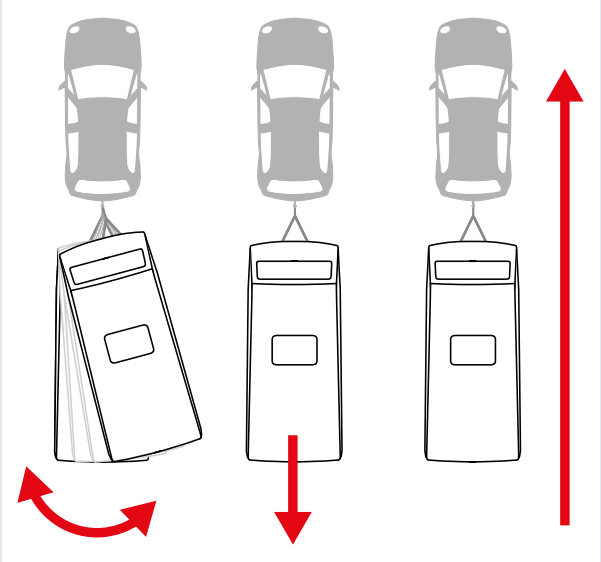

ATC monitors for instability and reacts to control the movement!



The AL-KO ATC stabilisation system can be operated in addition to trailer ESP in the car, such as is offered by some car manufacturers.

AL-KO ATC Trailer-Control is a one-off investment that will constantly deliver maximum safety when towing trailers.

Automatic: The safety check!



The 13-pin plug establishes the electrical power supply to the car.



The ATC Trailer-Control system automatically starts a function test.



The LED on the overrun device lights up green. The system is 100% functional.



I Excellently equipped!
AL-KO offers several safety components for vehicle combinations, which can be used independently from one another, and ensure more stable driving with caravans or trailers.

I ATC – The system for passive safety:
The ATC AL-KO Trailer-Control is an emergency braking system and is activated automatically if the vehicle combination encounters a critical read instability situation, i.e. if the swinging of the carrier reaches a critical level.

I AKS – The system for active safety:
The AL-KO AKS™ stabiliser permanently suppresses minor swaying and pitching movements of the trailer, and increases the critical driving speed by approx. 20% (ADAC test winner).

Thus, both systems supplement one another to make a perfect safety program:

The new formula for maximum towing safety:

1 ATC + 1 AKS = 3

1. **prevents skidding**
2. **suppresses pitching**
3. **counteracts swaying**

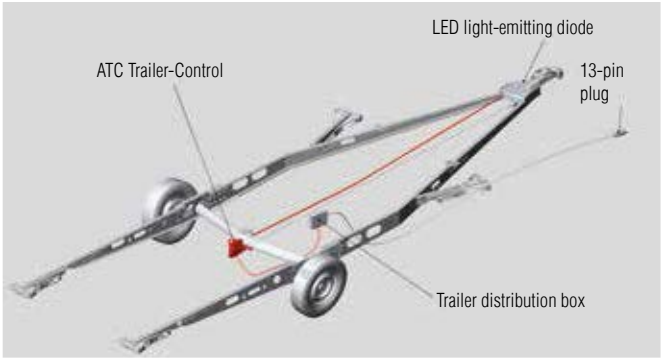

I AL-KO ATC – for retrofitting:
ATC can be retrofitted to an AL-KO caravan chassis as well as hobby caravans (from 1997 model year onwards, only single axle trailers with a Knott axle).



SURFACE TREATMENT
I Black painted aluminium housing
I watertight



SCOPE OF DELIVERY
The AL-KO ATC package for subsequent installation.
Net weight approx. 4.5 kg



2LINK CONNECTIVITY SYSTEM

More safety and comfort on the road





AL-KO 2LINK SYSTEM

- The starter package includes the 2LINK Box and smartphone app
- System for connecting chassis components to the smartphone
- The ATC status display is included free of charge in the starter package
- Important safety functions while driving at a glance

2LINK APP

- Download the app free of charge from the App Store and Google Play Store

Content:

1. 2LINK functions: ATC status display already integrated.
   Levelling function available separately via an in-app purchase.
2. Service stations
3. Specific operating instructions

The 2LINK box is installed in the area of the caravan's drawbar.
The box uses Bluetooth LE to transmit signals to the smartphone in the vehicle.
Bluetooth LE is a wireless technology standard that can network devices in the surrounding area up to approx. 10 metres.

- Easy to retrofit
- 2LINK Box can be updated so that it always has the latest functions

For more information about 2LINK and the app, go to www.alko-tech.com/2link

GET IT ON Google Play

Download on the App Store



The integrated **electronic spirit level** makes it easy to manually level the caravan.
The sensor integrated in the 2LINK box detects the current alignment of the caravan and the optional spirit level app (subject to a fee/in-app purchase) shows the position directly on the smartphone display. Thus caravan owners can simply carry their mobile phones during alignment and get the information that they require right where it is needed: directly at the steadies.



ATC status display

Levelling function

The ATC indicates via radio that is functioning and connecting to a mobile device inside the towing vehicle. The display shows the driving situation enabling the driver to detect when driving conditions become dangerous. The driver can then adjust the driving style accordingly, ensuring a safe journey.



A clearly visible green **LED** indicates that the emergency system is fully functional.

TECHNICAL DATA

ATC TRAILER CONTROL

ATC installation for AL-KO chassis

AL-KO chassis	Gross weight, min. – max. kg	Unladen weight min. kg	Part no.
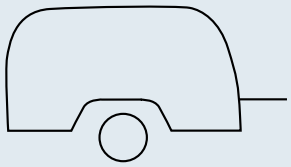	750–1,000	500	1 223 022
	1,001–1,300	800	1 223 022
	1,301–1,500	1,000	1 223 023
	1,501–1,800	1,100	1 223 287
	1,801–2,000	1,300	1 225 186
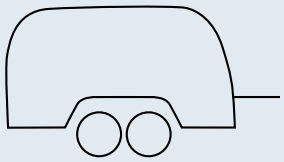	1,300–1,600	1,000	1 223 161
	1,601–2,000	1,200	1 223 162
	2,001–2,500	1,600	1 223 288
	2,501–2,800	1,800	1 730 034

ATC installation for hobby caravans (from model year 1997) with Knott axle

Hobby caravan	Gross weight, min. – max. kg	Unladen weight min. kg	Part no.
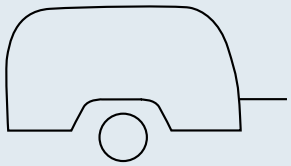	750–1,000	500	1 225 429
	1,001–1,300	800	1 225 429
	1,301–1,600	1,000	1 225 430
	1,601–1,900	1,100	1 225 431

AL-KO 2LINK SYSTEM

Description	Part no.
AL-KO 2LINK System	1 731 216

Suitable for all ATCs (including ATC-Hobby) from 2017. For older ATCs, a software update is possible at AL-KO customer centres (price for software update on request). The levelling function is available via an in-app purchase in the store.

FAQ

How long does it take to install ATC?	Retrofitting in about 2-4 hours.
Does ATC need to be registered when retrofitted?	No. It is sufficient for the general operating permit to be included with the vehicle documents.
Where does the ATC get its electrical power from?	The ATC is connected to the trailer's distribution box, from where it is supplied by the continuous positive of the 13-pin plug when travelling.
How much current does the ATC need?	(Standard fuse) 15 amps.
Can the ATC also be fitted to trailers with a 7-pin plug?	No. The electrical power supply via the 7-pin plug is not sufficient.
Where does the LED have to be mounted?	In the area of the overrun device (visual range when coupling).
Does the brake light come on when ATC is working?	No. The ATC brakes the vehicle combination gently, comparable to the engine brake of a car. As a result, there is no need for the brake light to be activated.
Does the ATC (e.g. like the AKS read stabiliser) fulfil the new criteria for a 100 km/h speed limit (factor 1.0 in the caravan and factor 1.2 for other trailers)? - *May not be relevant in your country.*	No. ATC (like ESP in a car) is solely an emergency system and does not improve the critical speed range like an AKS does.
Does ATC require maintenance?	No. The system is maintenance-free.
How do I detect when ATC is ready to operate?	As soon as the 13-pin plug from the trailer or caravan is connected to the towing vehicle, ATC performs a complete self-check (1 brake activation and plausibility check of the electronics system). The function status is displayed by a green LED on the overrun device. Green = ready to function Red = non-functional (but ready for driving) Red flashing = trailer is braking (not ready for driving)
How can I tell in the car when the ATC emergency system is operating?	The gentle braking effect can be felt in the car.

16. LIGHTING SYSTEMS





LIGHTING SYSTEMS

Jokon	552
Product range	553
Bulb-type lights	554
LED lighting	555
LED controller	555
Limit lights	556 – 557
Side marker lights	557
Cable sets + snap-in	558
Plug + plug adapter	559
Number plate lights	560
Holder	561

COMPETENCIES

AL-KO is a JOKON contractual partner for lighting systems in commercial trailers in Poland, Slovakia and Czech Republic among others.

JOKON has been meeting the high expectations of the international vehicle industry for many decades now. From the initial idea to development, to production and spare parts supply, JOKON is a flexible and reliable partner.

In particular, manufacturers of buses, trucks, caravans, forklifts, trailers, agricultural machinery, construction vehicles, tracked vehicles and bicycle carriers appreciate the flexibility and innovative power of a medium-sized company. Even manufacturers in the automotive industry, special vehicle construction as well as the quickly-growing electric car segment rely on JOKON.

With the latest production systems on nearly 10,000 square metres, JOKON manufactures according to DIN ISO 9001:2008 standards. Maximum customer satisfaction is the business focus for over 100 employees.

PRODUCT RANGE





Product name	**BASIC lighting systems**	**PROFI lighting systems**
Lighting technology	Bulbs	LEDs
Operating hours (service life)	Approx. 1,000 h	Approx. 25,000 h
Power consumption	5 W – 21 W, depending on the lighting function	1 W – 4 W, depending on the lighting function
Quality "Made in Germany"	Yes	Yes
Design	Classic	Modern
Waterproof	Protected against splash water IP 54	Waterproof sealed IP67 - IP6K9K (depending on the light)
Over-heating prevention	No	Yes, when overheating occurs, the luminosity is reduced protecting against premature failure (depending on the light)
Tolerates temperature fluctuations	-20°C to +30°C	-20°C to +50°C
Membrane technology present	Yes (covered for thermodynamic compensation)	Yes (covered for thermodynamic compensation)
Light source	Tungsten wire	Semiconductor
Colour temperature	2,700 Kelvin	Variable, depending on the light
Indicator diagnostic as per ECE R48	Yes	Yes, via intelligent LED light failure control.

Legend:

BL	**BR**	**S**	**W**	**SN**	**R**	**K**	**SM**
Indicator light	Brake light	Tail light	Reversing light	Rear fog light	Rear reflector	Number plate light	Side marker light

BULB-TYPE LIGHTS

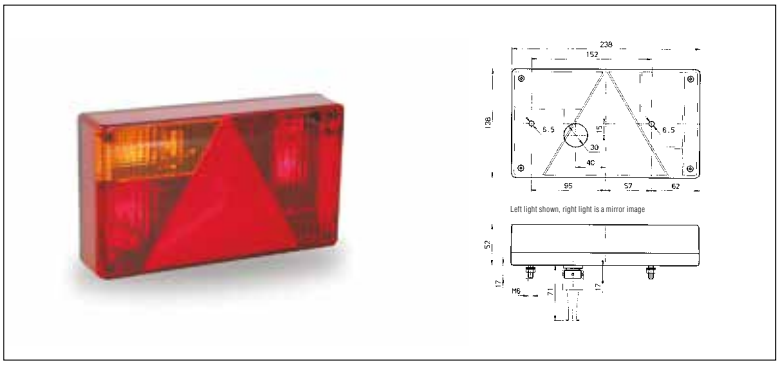

Multifunction light "L 595", left	
Part no.	1499012
SAP	MULTIFUNKTIONSLE. LI 12V 5-POL ROT/GELB
Packing unit	16 units
Features	BL, BR, S, SN, R, K
Voltage	12 V
Power	P21; P21/5W; C5W
Material	PMMA / ABS
Colour	Red-yellow
Connection	Central - 5-pin
Weight	0.6 kg
Homologation	E2-1281

Multifunction light "L 595", right	
Part no.	1499647
SAP	MULTIFUNKTIONSLE. RE 12V 5-POL ROT/GELB
Packing unit	16 units
Features	BL, BR, S, R, K
Voltage	12 V
Power	P21; P21/5W; C5W
Material	PMMA / ABS
Colour	Red-yellow
Connection	Central - 5-pin
Weight	0.6 kg
Homologation	E2-1281



1498831 1498832 + 1656848

Multifunction light "L 830", left	
Part no.	1498831
SAP	MULTIFUNKTIONSLEUCHTE LI 12V 5-POL ROT
Packing unit	16 units
Features	BL, BR, S, SN, R, K
Voltage	12 V
Power	PY21; P21/5W; P21W; C5W
Material	PMMA / PP T 60
Colour	Red-clear
Connection	Central - 5-pin
Weight	0.5 kg
Homologation	E2-06061

Multifunction light "L 830", right	
Part no.	1498832
SAP	MULTIFUNKTIONSLEUCHTE RE 12V 5-POL ROT
Packing unit	16 units
Features	BL, BR, S, W, R, K
Voltage	12 V
Power	PY21; P21/5W; P21W; C5W
Material	PMMA / PP T 60
Colour	Red-clear
Connection	Central - 5-pin
Weight	0.5 kg
Homologation	E2-06061

Multifunction light "L 830", right	
Part no.	1656848
SAP	MULTIFUNKTIONSLEUCHTE RE 12V 5-POL ROT
Packing unit	16 units
Features	BL, BR, S, R, K
Voltage	12 V
Power	PY21; P21/5W; C5W
Material	PMMA / PP T 60
Colour	Red-clear
Connection	Central - 5-pin
Weight	0.5 kg
Homologation	E2-06061

LED LIGHTING

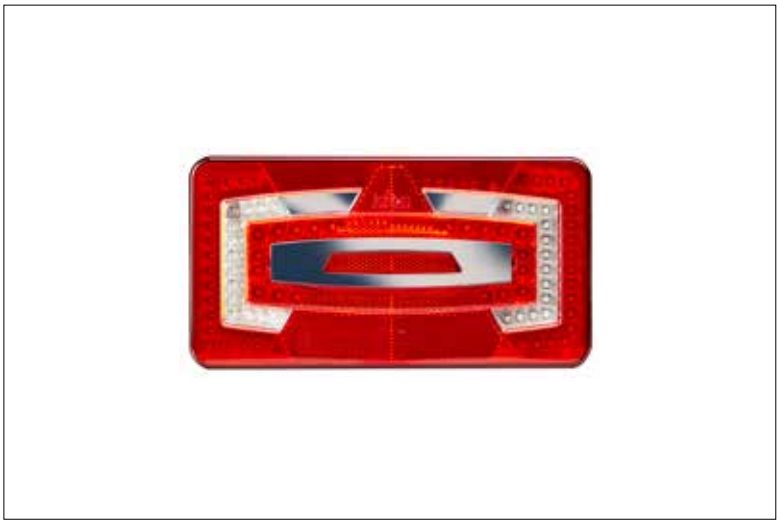

LED multifunction light "L 915", left	
Part no.	1499637
SAP	MULTIFUNKTIONSLEUCHTE LI LED 9-32V ROT
Packing unit	20 units
Features	BL, BR, S, W, SN, R
Voltage	9 – 32 V
Power	S-1.5W; BR-3.0W; BL-3.0W; SN-4.5W; W-3.0W
Material	PC
Colour	Red-clear
Connection	Central connection
Weight	0.5 kg
Homologation	E13-13359; EMV / EMC
Temperature	(-20 °C / +50 °C)

LED multifunction light "L 915", right	
Part no.	1499638
SAP	MULTIFUNKTIONSLEUCHTE RE LED 9-32V ROT
Packing unit	20 units
Features	BL, BR, S, W, SN, R
Voltage	9 – 32 V
Power	S-1.5W; BR-3.0W; BL-3.0W; SN-4.5W; W-3.0W
Material	PC
Colour	Red-clear
Connection	Central connection
Weight	0.5 kg
Homologation	E13-13359; EMV / EMC
Temperature	(-20 °C / +50 °C)

LED CONTROLLER

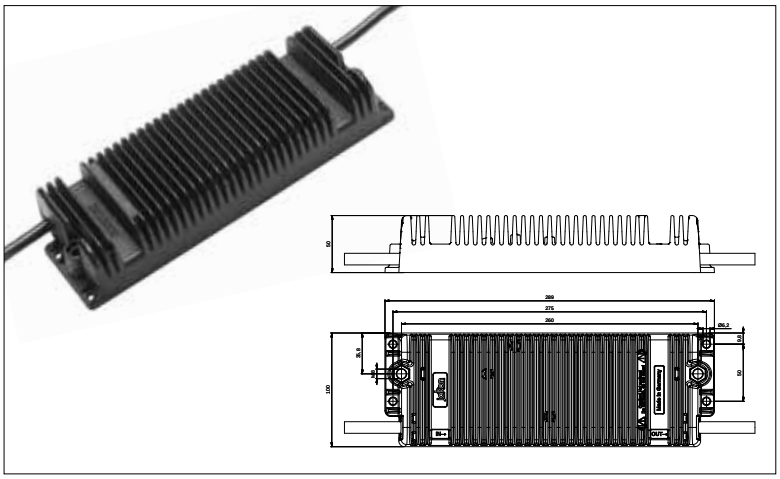

LED controller "LK 2000-1"	
Part no.	1499960
SAP	LED-KONTROLLBOX 12V ALU SCHWARZ
Packing unit	1 units
Voltage	12 V
Power	Max. 140 W
Material	Aluminium / PU
Colour	Black
Connection	Cable 1 x 1500 mm / 1 x 3500 mm
Weight	2.6 kg
Homologation	EMV / EMC
Temperature	(-20 °C / +50 °C)

LIMIT LIGHTS

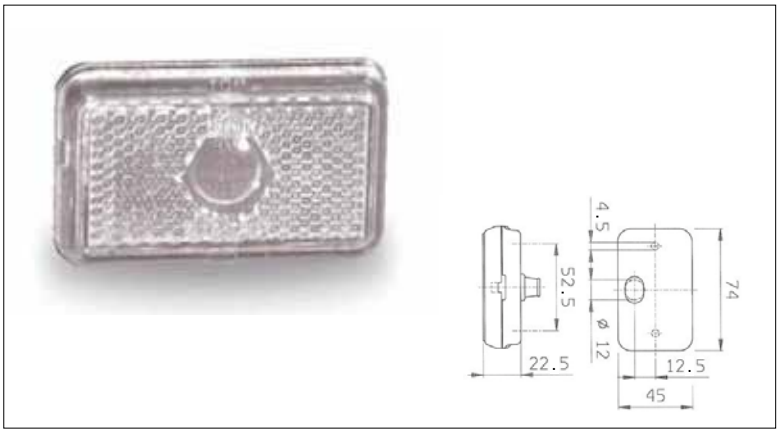

Limit light "PL (R) 130", right	
Part no.	254847
SAP	BEGRENZUNGSLEUCHTE 12V RE
Packing unit	100 units
Voltage	12 V
Power	C 5 W
Material	PMMA / PC
Colour	Clear
Connection	Flat-pin connectors
Weight	0.05 kg
Homologation	A-0221653 + IA-0221339

Limit light "PL (R) 130", left	
Part no.	1499892
SAP	BEGRENZUNGSLEUCHTE 12V LI
Packing unit	100 units
Voltage	12 V
Power	C 5 W
Material	PMMA / PC
Colour	Clear
Connection	Flat-pin connectors
Weight	0.05 kg
Homologation	A-0221653 + IA-0221339

Limit light "PL (R) 130" + snap-in, right	
Part no.	1656864
SAP	BEGRENZUNGSLEUCHTE 12V RE+SNAP IN
Packing unit	50 units
Voltage	12 V
Power	C 5 W
Material	PMMA / PC
Colour	Clear
Connection	Flat-pin connectors
Weight	0.09 kg
Homologation	A-0221653 + IA-0221339

Limit light "PL (R) 130" + snap-in, left	
Part no.	1656865
SAP	BEGRENZUNGSLEUCHTE 12V LI+SNAP IN
Packing unit	50 units
Voltage	12 V
Power	C 5 W
Material	PMMA / PC
Colour	Clear
Connection	Flat-pin connectors
Weight	0.09 kg
Homologation	A-0221653 + IA-0221339

LIMIT LIGHTS



Rear reflector "R 170", with self-adhesive film	
Part no.	1656855
SAP	RÜCKSTRAHLER GELB MIT SELBSTKLEBEFOLIE
Packing unit	100 units
Material	SAN/ABS
Colour	Yellow
Weight	0.04 kg
Homologation	E3-0251007

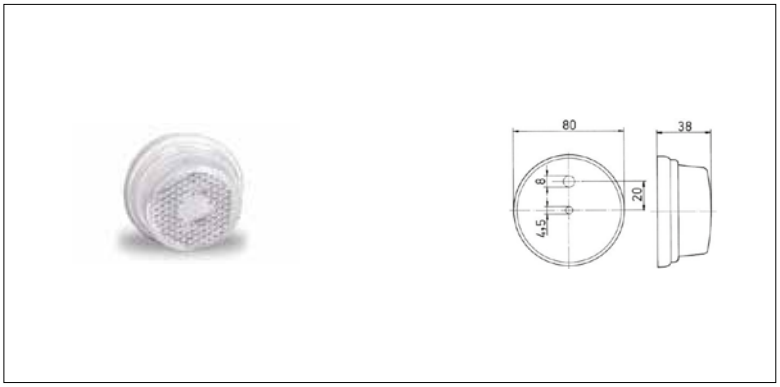

Limit light "PLR 272",
with integrated rear reflector

Part no.	1656856
SAP	BEGRENZUNGSLEUCHTE 12-24V KLAR
Packing unit	10 units
Voltage	12–24 V
Power	C 5 W
Material	PMMA/ABS
Colour	Clear
Connection	Flat-pin connectors
Weight	0.05 kg
Homologation	E1-0221633 + IAE1-0221378

SIDE MARKER LIGHTS

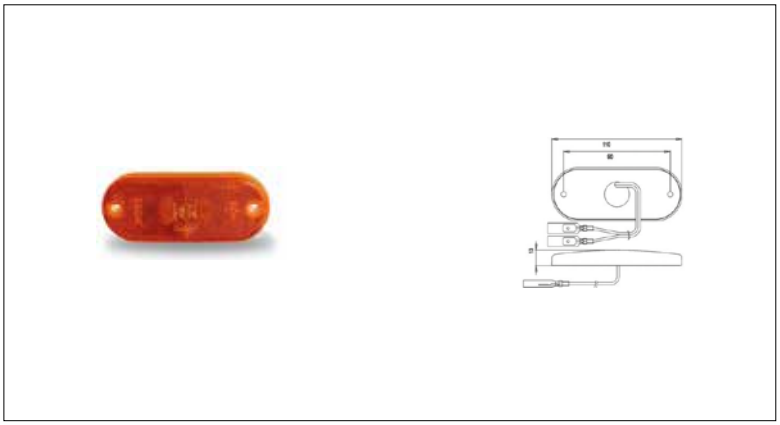

LED side marker light "SMLR 2002",
with integrated rear reflector

Part no.	1656866
SAP	SEITENMARKIERUNGSLEUCHTE 12V+24V
Packing unit	20 units
Voltage	12–24 V
Power	0.6–1.2 W
Material	PMMA/ABS
Colour	Orange
Connection	Cable with snap-in plug
Weight	0.098 kg
Homologation	E2-0062 + SAE
IP	IP67

CABLE SET + SNAP-IN

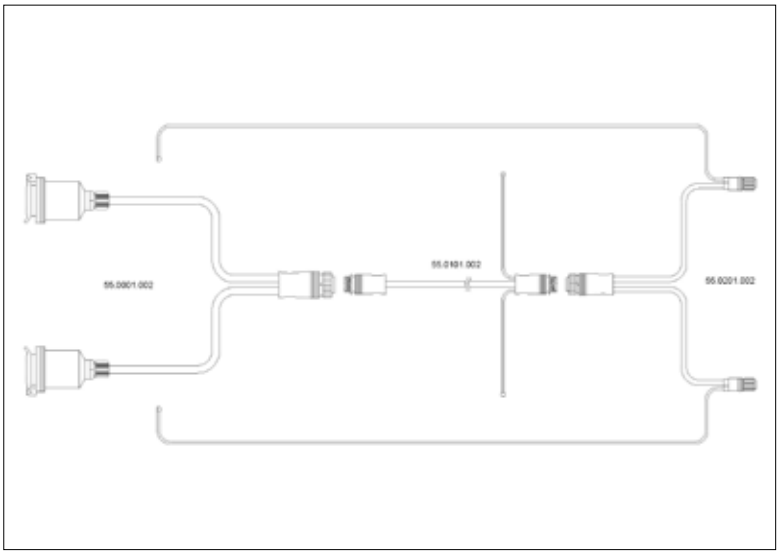

Cable set (power cable 3.5 m) multi-core, black	
Part no.	1656851
SAP	KABELSATZ MEHRADRIG SCHWARZ
Packing unit	30 units
Voltage	12 V
Connection	Plug 7-pin, central connection 5-pin
Weight	0.589 kg

Cable set (power cable 4.15 m) multi-core, black	
Part no.	1656852
SAP	KABELSATZ MEHRADRIG SCHWARZ
Packing unit	25 units
Voltage	12 V
Connection	Plug 7-pin, central connection 5-pin
Weight	0.68 kg

Cable set (power cable 7.70 m) multi-core, black	
Part no.	1656940
SAP	ANSCHLUSSKABEL
Packing unit	10 units
Voltage	12 V
Connection	Plug 13-pin, central connection 6-pin, flat cable
Weight	1.94 kg

Cable set (power cable 4.15 m + connection cable 2.25 m) multi-core, black	
Part no.	1656853
SAP	KABELSATZ MEHRADRIG SCHWARZ
Packing unit	15 units
Voltage	12 V
Connection	Plug 7-pin, central connection 5-pin, blade receptacle
Weight	0.925 kg

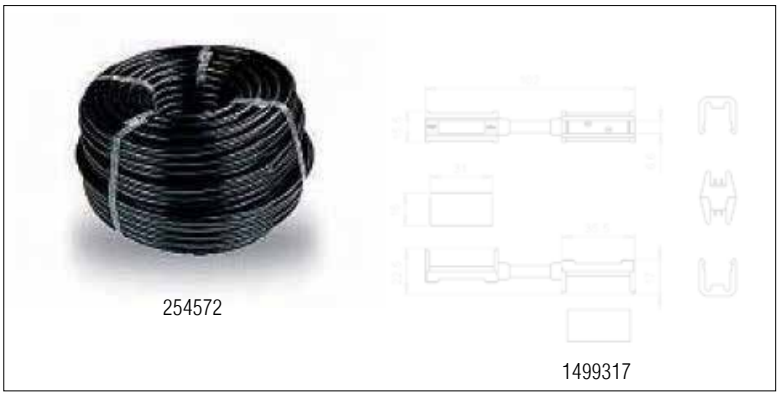

254572

1499317

Snap-in flat cable (2-wired)	
Part no.	254572
SAP	FLACHKABEL 2x1,5mm² SNAP-IN 100m Rolle
Packing unit	Roll (100 m)
Features	2 x 1.5 mm²

Double snap-in	
Part no.	1499317
SAP	DOPPEL SNAP-IN MIT 20 MM KABEL
Packing unit	10 units
Features	With cable (20 mm)
Weight	0.02 kg

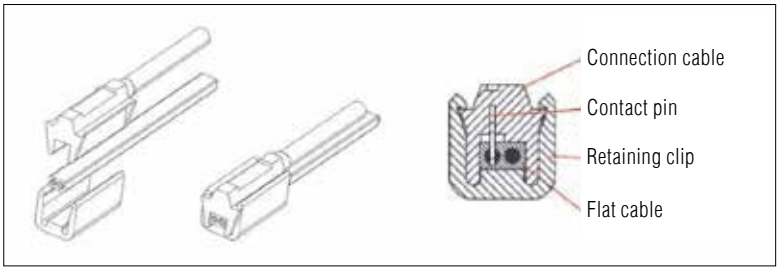

Snap-in retaining clip	
Part no.	254650
SAP	HALTEKLAMMER SNAP-IN WEISS
Packing unit	20 units
Colour	White
Weight	0.004 kg

PLUG + PLUG ADAPTER



Plug 7-pin, type 12N, ISO 1724

Part no.	1656857
SAP	STECKER 7-POL 12V KUNSTSTOFF SCHWARZ
Packing unit	20 units
Voltage	12 V
Material	Plastic
Colour	Black
Connection	Screw connection
Weight	0.08 kg



Plug 13-pin, ISO 11446

Part no.	1656858
SAP	STECKER 13-POL 12V KUNSTSTOFF SCHWARZ
Packing unit	10 units
Voltage	12 V
Material	Plastic
Colour	Black
Connection	Screw connection
Weight	0.14 kg



Adapter piece 13/7, mini VL9/3M

Part no.	1656859
SAP	ADAPTER KURZ 13/7POL 12V KUNSTST SCHW
Packing unit	10 units
Voltage	12 V
Material	Plastic
Colour	Black
Connection	Screw connection
Weight	0.08 kg



Adapter piece 7/13, mini VL9/4M

Part no.	1656860
SAP	ADAPTER KURZ 7/13POL 12V KUNSTST SCHW
Packing unit	10 units
Voltage	12 V
Material	Plastic
Colour	Black
Connection	Screw connection
Weight	0.08 kg

NUMBER PLATE LIGHTS



Number plate light K 415, without bulb	
Part no.	250006
SAP	KENNZEICHENLEUCHTE K 415 12V SCHWARZ
Packing unit	10 units
Voltage	12 V
Power	R 10 W
Material	PMMA / ABS
Connection	Flat-pin connectors
Weight	0.08 kg
Homologation	E1-22838

Number light K 415 + 50 cm snap-in *(no illustration)*	
Part no.	1656862
SAP	KENNZEICHENLEUCHTE K 415 12V+50CM SNAP
Packing unit	50 units
Voltage	12 V
Power	R 10 W
Material	PMMA / ABS
Connection	Flat-pin connectors
Weight	0.11 kg
Homologation	E1-22838

Number light K 415 + 100 cm snap-in *(no illustration)*	
Part no.	1656863
SAP	KENNZEICHENLEUCHTE K 415 12V+100CM SNAP
Packing unit	50 units
Voltage	12 V
Power	R 10 W
Material	PMMA / ABS
Connection	Flat-pin connectors
Weight	0.14 kg
Homologation	E1-22838

HOLDER

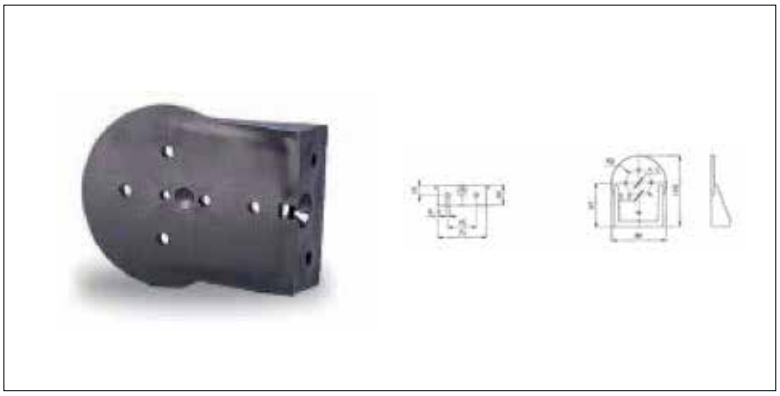

Holder WHL 272	
Part no.	1656861
SAP	HALTER SCHWARZ
Packing unit	50 units
Material	TPU
Colour	Black
Weight	0.08 kg

17. OTHER ACCESSORIES



OTHER ACCESSORIES

Wheel chocks, product range	564 – 565
Wheel chocks, metal	566
Wheel chocks, plastic	567 – 568
Holder, plastic / metal	568 – 569
Weather protection	570
Plug holder	570
Storage box	571
Spare wheel carrier	572 – 573
Jack	574 – 575
Ramps	576 – 582
Boat rollers	584 – 591

WHEEL CHOCKS

Product range

I SAFE
I LIGHTWEIGHT
I MODERN DESIGN



YOUR ADVANTAGE

AL-KO metal or plastic wheel chocks secure motor vehicles and trailers by blocking the wheels so they cannot roll away.

GERMAN REGULATIONS

Section 41(14) of the German Road Traffic Licensing Regulations (StVZO) prescribes that **the following** motor vehicles and trailers must be fitted with at least **one wheel chock**.

1. Motor vehicles – except for tracked vehicles – with a permitted gross weight of more than 4 t.
2. Twin-axle trailers (except for semi-trailers, rigid-axle trailers and centre-axle trailers) with a permitted gross weight of more than 750 kg

According to the same Regulations, at least **two wheel chocks** must be fitted to the following:

1. Three-axle and multi-axle vehicles
2. Semi-trailers
3. Rigid-axle trailers and centre-axle trailers with a permitted gross weight of more than 750 kg

When not in use, the wheel chocks of the motor vehicle or trailer must be attached in or on the vehicle in an easily accessible place with holders in such a way that they cannot be lost or rattle around. Hooks or chains may not be used as holders for wheel chocks for this reason.
The effectiveness of the wheel chocks according to Section 41 of the StVZO must be checked by the vehicle manufacturer (18% uphill and downhill at kerb weight and permitted gross weight).

Our wheel chocks are in accordance with DIN 76051 edition 11/92. DIN 76051 is generally recognised in all countries of Europe. However, regulations of specific countries must be complied with. Please consider the UK or country-specific regulations and regulations.

Product name
Wheel load per chock (variants)
Material
Net weight
Certified to DIN 76051
Corrosion protection
Colour
Special colours according to RAL colour card
Customer logo
Style
Temperature resistance
UV resistance
Wheel chock holder









BASIC wheel chocks	PLUS wheel chocks
1,600 / 5,000 / 6,500 kg	800 / 1,600 / 5,000 / 6,500 kg
Galvanised steel plate, spot welded	Plastic, PE
High	Low
Yes	Yes
Limited corrosion protection (galvanised spot welded)	Durable corrosion protection (plastic)
Silver (galvanised)	Black RAL 9005
not possible	possible starting from 1,000 units per date (additional cost)
not possible	possible starting from 1,000 units per date (additional cost)
Classic	Modern
+60° to -30°	+60° to -30°
Yes	Yes
Available, can be used for BASIC and PLUS product line	Available, can be used for BASIC and PLUS product line

WHEEL CHOCKS

Metal



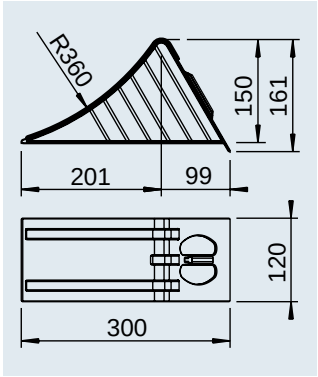

Wheel chock UK 36 St	
SAP: UNTERLEGKEIL UK36 VZ DIN76051	
Part no.	244 373
Material/Surface/Colour	Metal Galvanised steel
Wheel load per chock	1,600 kg
Static tyre radius	max. up to 360 mm
	1.25 kg
	– 210 units



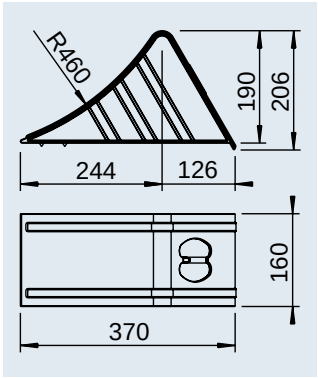

Wheel chock UK 46 St	
SAP: UNTERLEGKEIL UK46 VZ DIN76051 - 4635370	
Part no.	244 374
Material/Surface/Colour	Metal Galvanised steel
Wheel load per chock	5,000 kg
Static tyre radius	max. up to 460 mm
	3.05 kg
	– 110 units



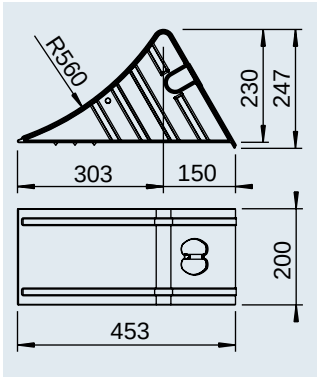

Wheel chock UK 53 St	
SAP: UNTERLEGKEIL UK53 VZ DIN76051 - 7622418	
Part no.	244 375
Material/Surface/Colour	Metal Galvanised steel
Wheel load per chock	6,500 kg
Static tyre radius	max. up to 560 mm
	5 kg
	– 60 units



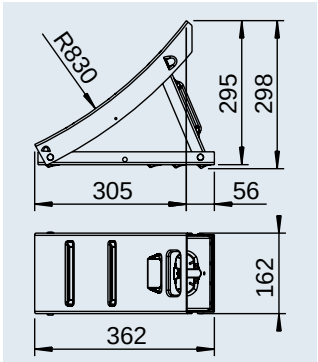

Wheel chock UK 800 St folding	
SAP: UNTERLEGKEIL 800 KLAPPBAR SCHW GRUND	
Part no.	1 250 015
Material/Surface/Colour	Metal black primed
Wheel load per chock	2,500 kg
Static tyre radius	max. up to 830 mm
	5 kg
	– 100 units

WHEEL CHOCKS

Plastic



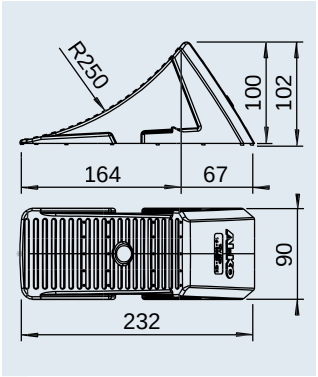

Wheel chock UK 10 K-2	
SAP: UNTERLEGKEIL UK 10	
Part no.	1 237 250
Material/Surface/Colour	Plastic black
Wheel load per chock	800 kg
Static tyre radius	max. up to 310 mm
	0.18 kg
/	50 / 600 units



* As of July 1, 2018, the wheel chock UK 10 K will be removed from the product range

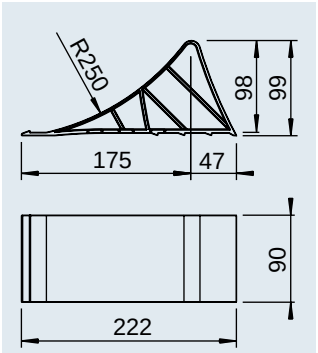

Wheel chock UK 10 K	
SAP: UNTERLEGKEIL SCHWARZ UK10K	
Part no.	249 422*
Material/Surface/Colour	Plastic black
Wheel load per chock	800 kg
Static tyre radius	max. up to 310 mm
	0.2 kg
/	– / 400 units



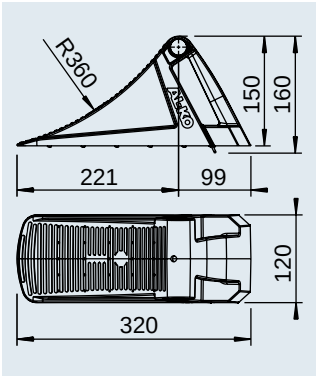

Wheel chock UK 36 KL	
SAP: UNTERLEGKEIL UK 36KL SCHWARZ	
Part no.	1 235 990
Material/Surface/Colour	Plastic black
Wheel load per chock	1,600 kg
Static tyre radius	max. up to 360 mm
	0.6 kg
/	– / 192 units



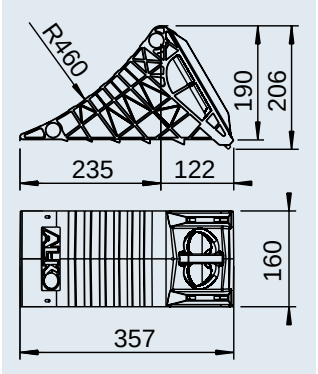

Wheel chock UK 46 K	
SAP: UNTERLEGKEIL UK46 KUNSTSTOFF	
Part no.	1 221 517
Material/Surface/Colour	Plastic black
Wheel load per chock	5,000 kg
Static tyre radius	max. up to 460 mm
	1.92 kg
/	– / 80 units

WHEEL CHOCKS

Plastic



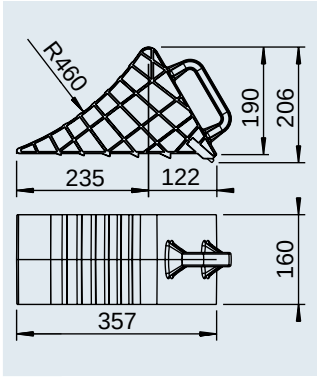

Wheel chock UK 46 K	
SAP: UNTERLEGKEIL UK46	
Part no.	1 213 314
Material/Surface/Colour	Plastic black
Wheel load per chock	5,000 kg
Static tyre radius	max. up to 460 mm
	1.85 kg
/	– / 64 units



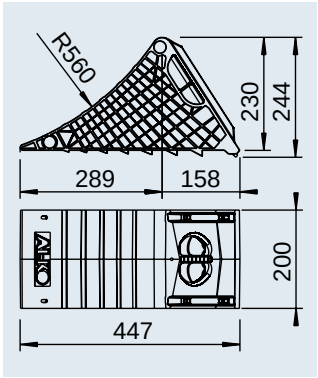

Wheel chock UK 53 K	
SAP: UNTERLEGKEIL UK53 KUNSTSTOFF SCHWARZ	
Part no.	1 221 515
Material/Surface/Colour	Plastic black
Wheel load per chock	6,500 kg
Static tyre radius	max. up to 560 mm
	2.90 kg
/	– / 42 units

HOLDER

Plastic



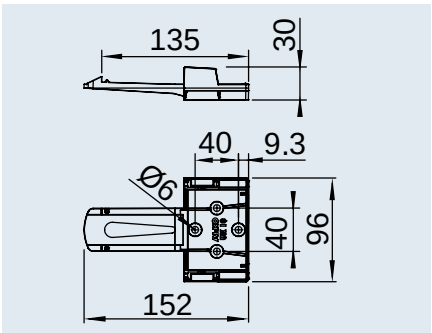

Holder HA 10 K-2 for UK 10 K-2	
SAP: HALTER UK10	
Part no.	1 237 251
Material/Surface/Colour	Plastic black
	0.03 kg
/	50 / 600 units



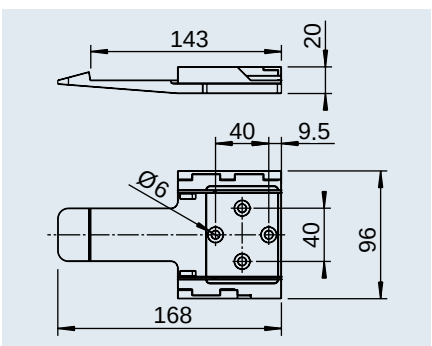

Holder HA 10 K for UK 10 K	
SAP: HALTER SCHWARZ UK10K	
Part no.	249 423*
Material/Surface/Colour	Plastic black
	0.05 kg
/	– / 1,000 units

* As of July 1, 2018, the holder HA 10 K will be removed from the product range

HOLDER

Metal



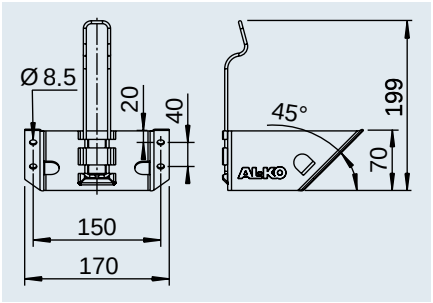

Holder HA 36 St for UK 36 steel and plastic	
SAP: HALTER UK36 VZ AL-KO	
Part no.	244 376
Material/Surface/Colour	Metal Galvanised steel
	0.50 kg
	– 600 units



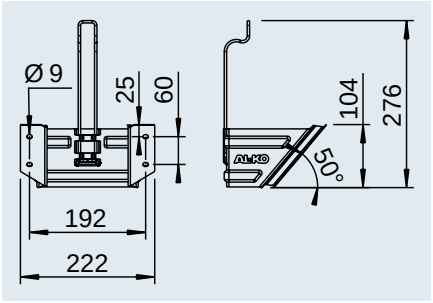

Holder HA 46 St for UK 46 steel and plastic	
SAP: HALTER UK46 VZ AL-KO - 7620776	
Part no.	244 377
Material/Surface/Colour	Metal Galvanised steel
	0.80 kg
	– 360 units



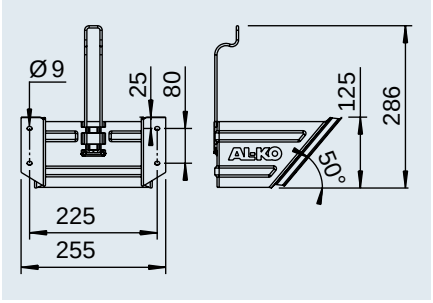

Holder HA 53 St for UK 53 steel and plastic	
SAP: HALTER UK53 VZ AL-KO - 7622417	
Part no.	244 378
Material/Surface/Colour	Metal Galvanised steel
	1.20 kg
	– 200 units



WEATHER PROTECTION

YOUR ADVANTAGE

High-quality material made of acrylic fabric with dirt- and water-repellent Cleangard coating.

Intricately-edged seams with 4 metal eyelets and 2 rubber straps for securing on the drawbar.

- Weather-resistant
- Breathable
- Colourfast



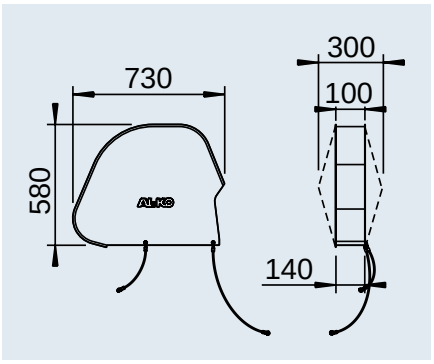

PREMIUM weather protection	
SAP: AL-KO WETTERSCHUTZ PREMIUM	
Part no.	1 730 474
Suitable for	AL-KO overrun devices V and square as well as competitor
Colour	white aluminium, similar to RAL 9006
	0.3 kg
/	– / 100 units



Weather protection	
SAP: WETTERSCHUTZ KUGELKUPPLUNG SCHWARZ	
Part no.	1 730 820
Suitable for	AL-KO and competitor coupling heads
	0.09 kg
/	– / 250 units



Weather protection	
SAP: WETTERSCHUTZ AKS KUPPLUNG SCHWARZ	
Part no.	1 730 821
Suitable for	AKS 1300 / 2004 / 3004 / 3504
	0.19 kg
/	– / 250 units

Plug holder with dual use

USE 1

Parking space for 7-pin electric plug

The narrower area of the plug holder provides a positive-locking space for the 7-pin electric plug.



USE 2

Parking space for 13-pin electric plug

The wider area of the plug holder provides a positive-locking space for the 13-pin electric plug.









Plug holder (turning tulip)	
SAP: STECKERHALTER KPL RAL3000	
Part no. units	218 260 00 04
Max. Ø electric plug	13-pin 41.5 mm 7-pin 36.0 mm
	0.07 kg
Part no. PU	1 222 699
	2.5 kg
/	35 / –

STORAGE BOX FOR CAR TRAILER

Secure and tidy

YOUR ADVANTAGE

- Lashing straps, gloves, tools, etc. are securely stored on the trailer, while still being easily accessible
- Lockable
- Protected against splash water
- Box load capacity 25 kg
- Covers on the side for opening

SCOPE OF DELIVERY

Storage box cpl. (see illustration) with mounting instructions, two keys, fixing materials not included

MATERIAL

Black plastic

MOUNTING EXAMPLE







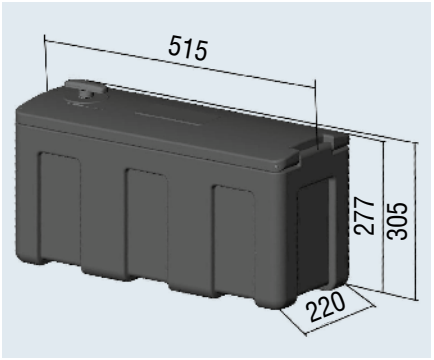



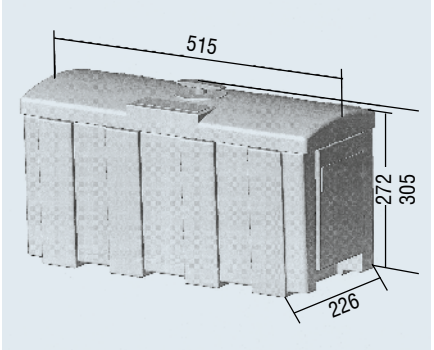

Storage box for car trailer Cover hinges on the end	
SAP: WERKZEUGBOX M LOGO AL-KO	
Part no.	1 224 324
Max. load	25 kg suspended
External dimensions LxWxH	515 x 220 x 277mm
Height inc. turning handle	305mm
Internal dimensions LxWxH	457 x 185 x 232 mm
Large opening	457 x 185mm
	3.5 kg / – / 20 units

Storage box for car trailer Cover hinges on the side	
SAP: STAUBOX DECKELSCHANIER LANGE SEITE	
Part no.	1 211 807
Max. load	20 kg suspended
External dimensions LxWxH	515 x 226 x 272 mm
Height inc. turning handle	305mm
Internal dimensions LxWxH	445 x 145 x 220 mm
	3.2 kg / – / 19 units

SPARE WHEEL CARRIER

YOUR ADVANTAGE

I More room
Accommodating the spare wheel under the trailer makes for more storage space inside.

I Driving properties
To achieve optimum driving properties, ADAC and DCC recommend transporting the spare wheel close to the axle.

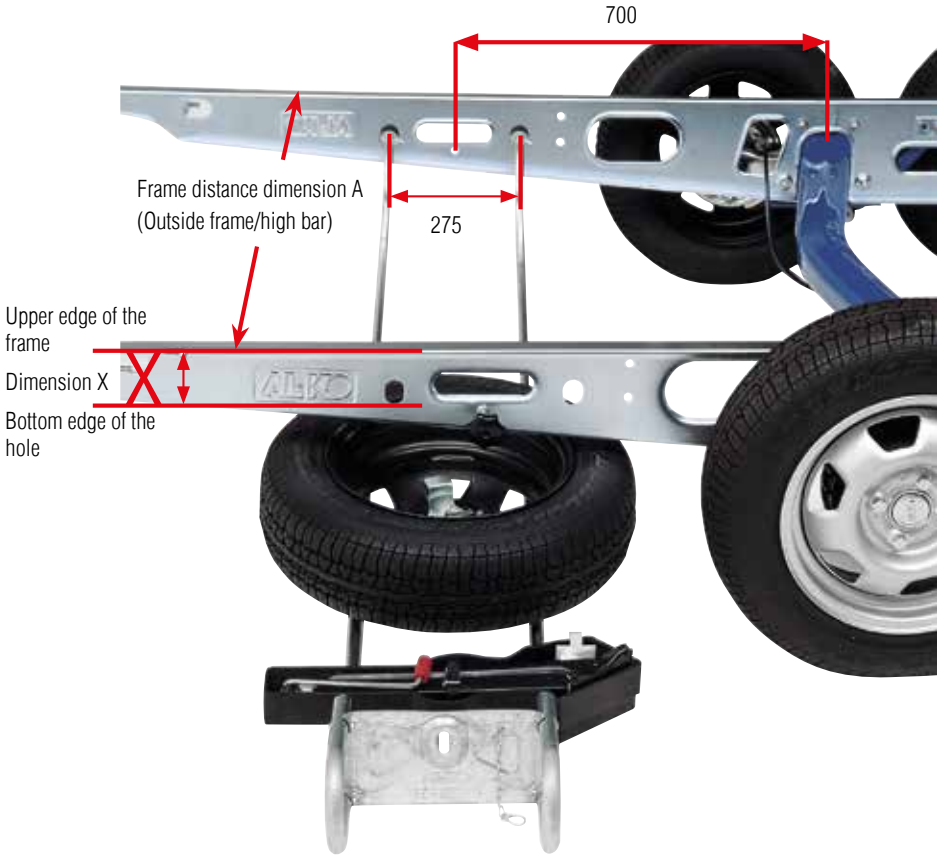

MOUNTING

On AL-KO chassis from year of manufacture 1985. The holes in the longitudinal frame (dimension X) for accommodating the spare wheel carrier are positioned so that the tyres intended for this vehicle can be attached there.
When installed properly according to the installation and operating instructions, there is no need for inspection or acceptance by an officially recognised expert (e.g. TÜV).

IMPORTANT: TÜV approval is required for mounting with holding plates.

I Operation
Unhook safety chain, open and remove star handle. Grip the spare wheel carrier with both hands and pull out until the spare wheel is easily accessible. Raise the caravan using a jack if there is insufficient clearance between the frame and ground.

Dimension X for determining the maximum possible tyre

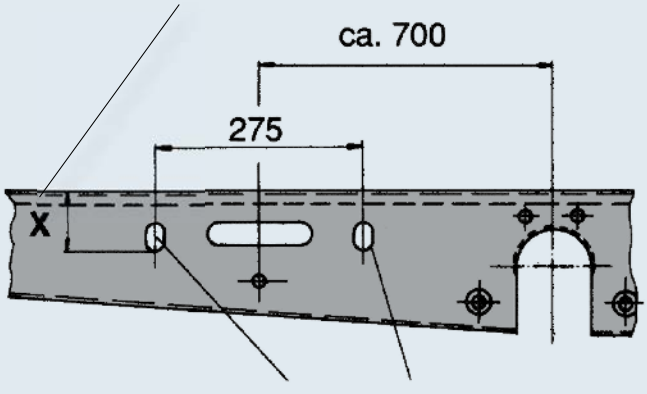

Mounting holes for spare wheel carrier

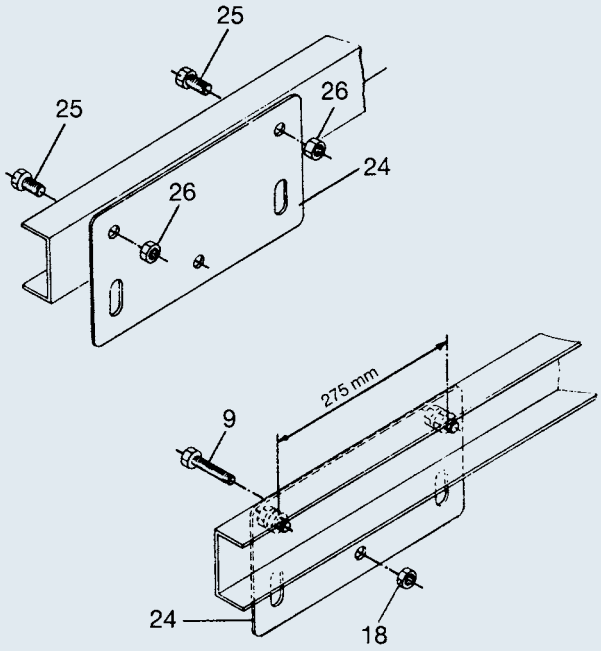

Installation notes:

The distance from the holding plates to the axle should be about 700 mm (diagram). Two holes Ø 12.5 mm are drilled 275 mm apart in both frame parts. The holes must be fitted in the middle of the web (neutral zone). The two holding plates (24) are secured with two hex bolts (25) M12x 25 and hex nuts (26) M12 self-locking.

The locking screw (9) is fitted in the right holding plate with the hex nut (18). Locking screw (9) and hex nut (18) are supplied with the spare wheel carrier.

Retrofit accessory kit EH2

Part no. 294 284 consisting of:

2 holding plates	(24)	Part no. 209 499 01
4 hex bolts	(25)	Part no. 700 460
4 hex nuts	(26)	Part no. 700 645

Spare wheel carrier EH1/BR



Retrofit accessory kit EH2



SAP: ERSATZRADHALTER EH/

Dimension X, min. mm		75	85	95	105	115	125	Frame gap mm	Imple-mentation	Part no.			
EH1	Tyre width mm*	155	165	175	185	195	205	1,050 – 1,250	A	1 555 934	6.4	–	5
								1,250 – 1,550	B	1 555 943	6.8	–	20
								1,450 – 1,850	C	1 555 955	7.7	–	20
EH1/BR		175	185	195	205	215	215	1,265 – 1,515	D	1 556005	6.8	–	20
								1,465 – 1,815	E	1 556 010	7.7	–	20
Retrofit accessory kit EH2										294 284	1.85	20	–

* Tyre widths are only guidance values due to permitted tolerances in the production of tyres.
With a tyre width of 215 mm, it is possible for jamming between the tyre and frame when the spare wheel carrier is pulled out. The ability to use the spare wheel carrier must be checked before installation!

JACK

YOUR ADVANTAGE

- **On request** as standard equipment or **can be retrofitted** to caravans with AL-KO chassis year of manufacture 1980 onwards.

- **Support**
  The AL-KO jack can also be used for supporting the caravan (leave the towing vehicle hitched up).

- **Plug-in system** No slipping due to special plug-in system (leave the towing vehicle hitched up). Special insertion pockets reinforce the frame and are additionally supported against the floor of the caravan (800 kg/1,000 kg).

Kit 1500 kg: Only for use on caravans with a tandem chassis and in combination with hydraulic jacks (min. 2000 kg load capacity, stamp Ø 28 - 40 mm, flat head or grooved, heights, see tables).



MOUNTING

From year of manufacture 1991, most caravans with AL-KO chassis have already been drilled with mounting holes.
In all other vehicles from year of manufacture 1980, you can drill the holes yourself as described in the operating instructions.

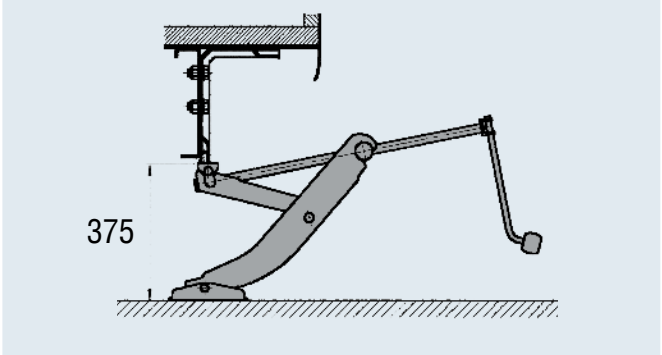

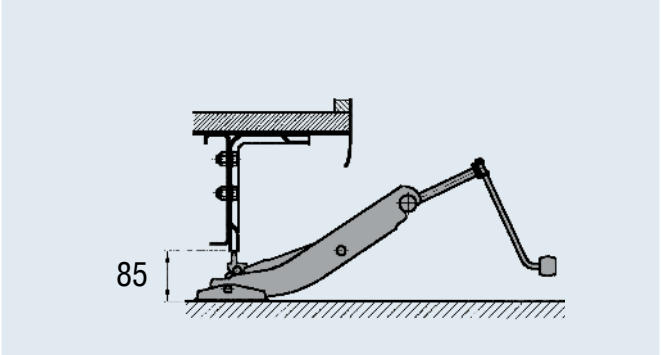



Kit 800 kg with box

1 plastic box in two parts
1 jack
2 jack bracket kits
1 bolt fixings
1 operating instructions

Jack kit 800 kg	
SAP: WAGENHEBER-SET	
Part no. with box	246 059
Part no. without box*	246 157
Load capacity stat.	800 kg
Suitable for trailers up to max. total weight	1,600 kg
Initial height	85 mm
Lifting height	290 mm
Final height	375 mm
	2.9 kg / – / 50 units

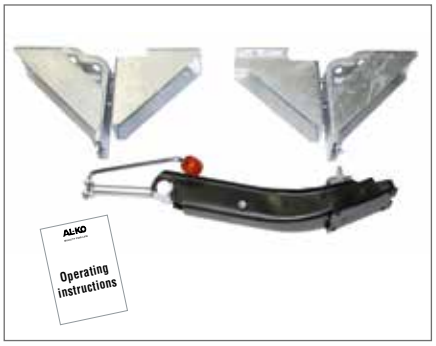

Kit 1,000 kg without box

1 jack
2 jack bracket kits
2 support brackets
1 bolt fixings
1 operating instructions

Jack kit 1000 kg	
SAP: WAGENHEBER-SET 1000KG	
Part no. with box	1 730 304
Part no. without box*	1 222 530
Load capacity stat.	1,000 kg
Suitable for trailers up to max. total weight	2,000 kg
Initial height	85 mm
Lifting height	290 mm
Final height	375 mm
	5.5 kg / – / 50 units



Kit 1,500 kg Tandem without box

2 jack bracket kits
2 reinforcement brackets
1 bolt fixings
1 operating instructions

Jack kit	Brackets	Jack
SAP	AUFNAHME WAGENHEBER VERP 2,1-3,0	WAGENHEBER TYP WEBER-HYDRAULIK A2-170
Part no. with box	1 730 240	1 730 395*
Load capacity stat.	1,500 kg	2,000 kg
Suitable for trailers up to max. total weight	3,000 kg	4,000 kg
Initial height	Max. 200 mm**	170 mm**
Lifting height	Min. 190 mm**	213 mm**
Final height		383 mm**
	4.5 kg	2.9 kg
	1 / 56	1 / 42

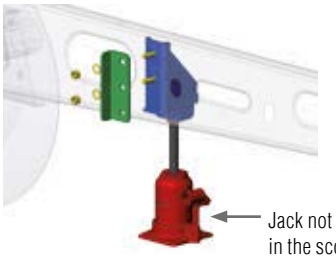

Jack not included in the scope of delivery!

* Not illustrated
** Values for hydraulic jack
*** If necessary, the final height must be adapted taking account of the initial height by using a stable underlay.

COMPACT RAMPS

made from Aluminium for small and medium loads

YOUR ADVANTAGE

- Smooth transition from loading edge to ramp
- High-grip because of non-slip perforated edge profile
- Undulating shape for smooth running
- Durable, corrosion-resistant aluminium alloy
- Light version for small and medium loads
- Non slip protection
- TÜV-tested

SAFETY

- The maximum permitted ramp gradient is 30% = 16.5°
- The ramps must be anchored on the loading surface
- Only use ramps in pairs
- Using ramps horizontally is not permitted
- Only drive on under supervision from a second person
- The ramps are exclusively to be used for loading and unloading powered vehicles with a brake
- Avoid driving on and braking rapidly, since this subjects the ramps to additional loads
- Refer to the operating instructions for additional safety notes



SCOPE OF DELIVERY

1 securing bolt per ramp with continuous thread and nut. The bolt provides protection against slipping in the gap between the side wall and base.





SAP: AUFFAHRRAMPE KPL GEBOGEN

Curved loading ramps

Part no. per pair	Type	Length L mm	Width B mm	Height S mm	Loading height min. - max. H mm	Load capacity per pair with axle distance				Weight per pair kg
						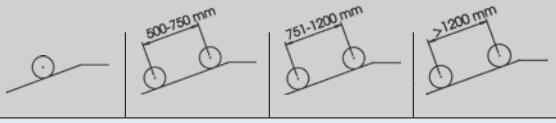				
130 568	400/1500/215	1500	215	30	200 – 250	260 kg	330 kg	400 kg	400 kg	6.8
130 586	400/2000/225	2000	225	40	300 – 380	260 kg	330 kg	400 kg	400 kg	10.2

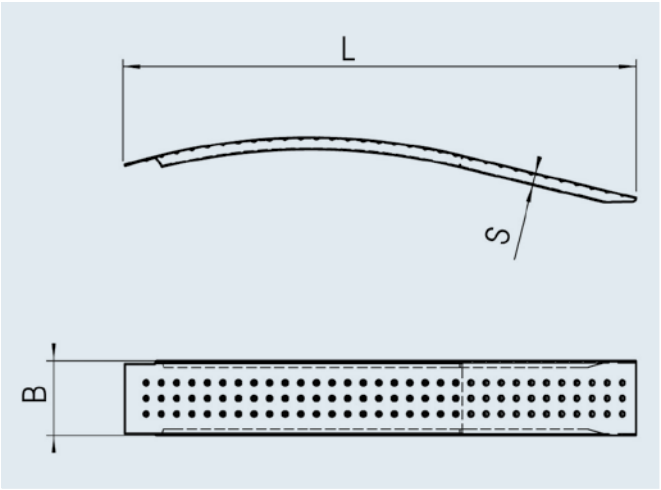

COMPACT RAMPS

made from Aluminium for small and medium loads

SAP: AUFFAHRRAMPE KPL GERADE

Straight loading ramps

Part no. per pair	Type	Length L mm	Width B mm	Height S mm	Loading height min. - max. H mm	Load capacity per pair with axle distance				Weight per pair kg
						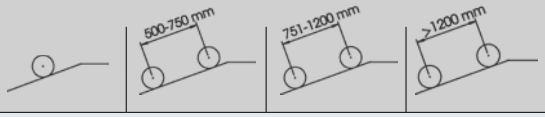				
130 569	400/1500/215	1500	215	35	300 – 400	260 kg	330 kg	400 kg	400 kg	6.8
130 585	400/2000/225	2000	225	40	400 – 500	260 kg	330 kg	400 kg	400 kg	10.2
130 590	1000/2000/260	2000	260	70	400 – 500	650 kg	750 kg	800 kg	1,000 kg	19.4
130 570	1000/2500/260	2500	260	70	600 – 700	650 kg	750 kg	800 kg	1,000 kg	26.4

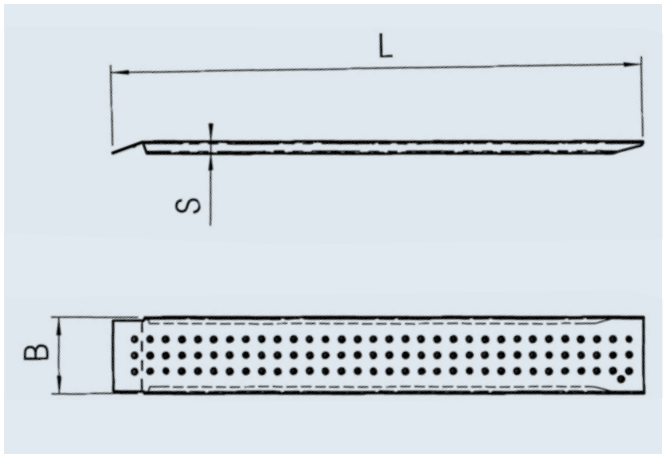



PROFESSIONAL RAMPS

made from aluminium for heavy loads

YOUR ADVANTAGE

- All ramps are CE and GS tested and certified.
  Many applications require only one ramp, not a pair of ramps (e.g. transporting motor cycles). This is why AL-KO provides individual units, offering you an optimum cost/benefit ratio.
- Not all grades of aluminium are the same! This is why AL-KO uses a combination of the alloys 6005 + 6082: 6005 offers good welding properties and optimum corrosion protection, while the outstanding strength of AL-KO ramps is achieved by using 6082 aluminium: This alloy guarantees the highest strength of all the 6000 alloys, and is normally used in bridge construction because of its very high strength.
- 100%-quality control. Each ramp is individually checked.

You should not be satisfied with anything less, because you are entitled to expect from AL-KO:

QUALITY FOR LIFE!

SAFETY

- The maximum permitted ramp gradient is 30 % = 16.5°.
- The ramps must be anchored on the loading surface.
- Only use ramps in pairs for multi-track vehicles.
- Using ramps horizontally is not permitted.
- Only drive on under supervision from a second person.
- The ramps are exclusively to be used for loading and unloading powered vehicles with brakes.







PROFI LOADING RAMPS FOR HEAVY LOADS

Version A



Supporting profile "A"

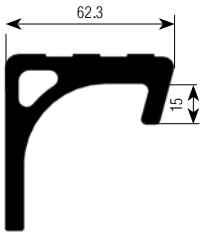

Type: 60 A
70 A
80 A

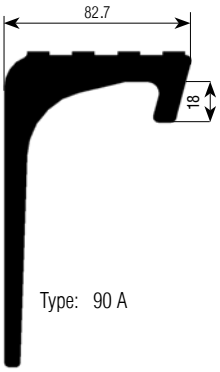

Type: 90 A

SAP: AUFFAHRRAMPE PROFI- ALU

Part no. per unit	Type	Ver-sion	Length L mm	Width External B mm	Height H mm	max. Loading height LH mm	Load capacity with axle distance X 1.00 m Unit [kg]	1.00 m Pair [kg]	1.50 m Unit [kg]	1.50 m Pair [kg]
1 224 700	60A20GH450	A	1,930	300	60	450	1,215	2,430	1,215	2,430
1 224 701	60A20GH600	A	1,928	300	60	600	1,215	2,430	1,215	2,430
1 224 702	60A20 H539	B	1,928	300	60	539	1,215	2,430	1,215	2,430
1 224 703	60A25GH450	A	2,370	300	60	450	870	1,740	950	1,900
1 224 704	60A25GH600	A	2,369	300	60	600	870	1,740	950	1,900
1 224 705	60A25 H665	B	2,439	300	60	665	870	1,740	950	1,900
1 224 706	70A20GH450	A	1,930	300	70	450	1,500	3,000	1,500	3,000
1 224 707	70A20GH600	A	1,928	300	70	600	1,500	3,000	1,500	3,000
1 224 708	70A20 H552	B	2,020	300	70	552	1,500	3,000	1,500	3,000
1 224 709	70A25GH450	A	2,370	300	70	450	1,070	2,140	1,165	2,330
1 224 710	70A25GH600	A	2,369	300	70	600	1,070	2,140	1,165	2,330
1 224 711	70A25 H679	B	2,460	300	70	679	1,070	2,140	1,165	2,330
1 224 712	80A20GH450	A	1,930	300	80	450	1,745	3,490	1,745	3,490
1 224 713	80A20GH600	A	1,928	300	80	600	1,745	3,490	1,745	3,490
1 224 714	80A20 H552	B	2,020	300	80	552	1,745	3,490	1,745	3,490
1 224 715	80A25GH450	A	2,370	300	80	450	1,250	2,500	1,355	2,710
1 224 716	80A25GH600	A	2,369	300	80	600	1,250	2,500	1,355	2,710
1 224 717	80A25 H679	B	2,460	300	80	679	1,250	2,500	1,355	2,710
1 224 718	90A20GH450	A	1,950	400	90	450	2,030	4,060	2,030	4,060
1 224 719	90A20GH600	A	1,948	400	90	600	2,030	4,060	2,030	4,060
1 224 720	90A20 H552	B	2,020	400	90	552	2,030	4,060	2,030	4,060
1 224 721	90A25GH450	A	2,391	400	90	450	1,450	2,900	1,580	3,160
1 224 722	90A25GH600	A	2,391	400	90	600	1,450	2,900	1,580	3,160
1 224 723	90A25 H679	B	2,460	400	90	679	1,450	2,900	1,580	3,160

Version B



Supplied package version B



Supporting profile "B"

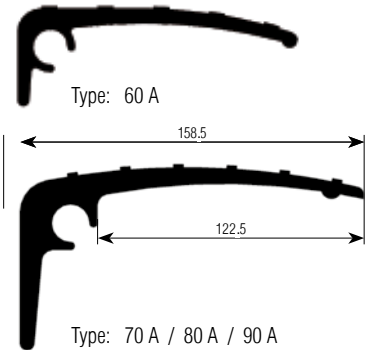

Load capacity with axle distance X 2.00 m		Inherent weight of the ramp	
Unit [kg]	Pair [kg]	Unit [kg]	Pair [kg]
1,215	2,430	10.4	20.8
1,215	2,430	10.4	20.8
1,215	2,430	11.0	22.0
950	1,900	12.6	25.2
950	1,900	12.6	25.2
950	1,900	13.0	26.0
1,500	3,000	10.7	21.4
1,500	3,000	10.7	21.4
1,500	3,000	11.6	23.2
1,165	2,330	13.0	26.0
1,165	2,330	13.0	26.0
1,165	2,330	13.9	27.8
1,745	3,490	10.7	21.4
1,745	3,490	10.7	21.4
1,745	3,490	11.6	23.2
1,355	2,710	13.0	26.0
1,355	2,710	13.0	26.0
1,355	2,710	13.9	27.8
2,030	4,060	13.7	27.4
2,030	4,060	13.7	27.4
2,030	4,060	13.7	27.4
1,580	3,160	16.3	32.6
1,580	3,160	16.3	32.6
1,580	3,160	16.4	32.8

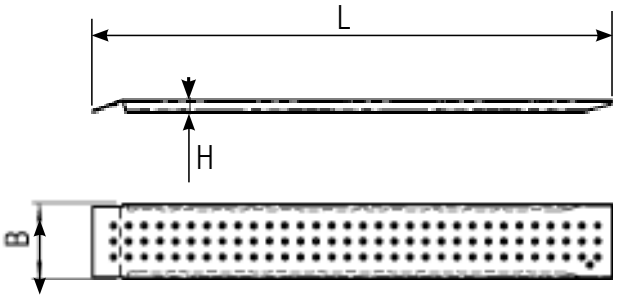

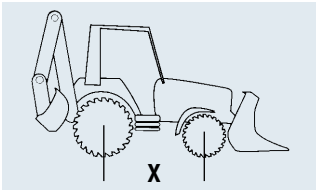

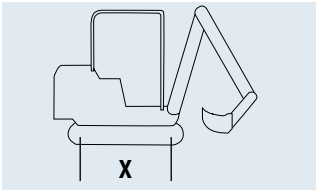

INSTRUCTIONS FOR USE

1 Before loading, make sure that the axle distance, vehicle's own weight and load distribution on the axles is within the standard bandwidth.

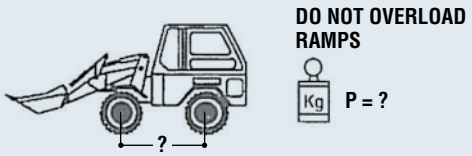

2 Do not support the ramps to increase their load bearing capacities.

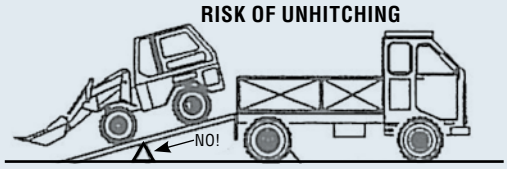

3 Check the vehicle track and adjust the distance between the axles accordingly. Make sure that the ramps are parallel.

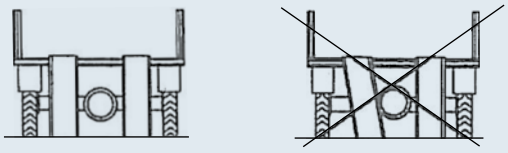

4 Lower the transport vehicle for loading, lock the wheels and engage the handbrake. Switch off the engine and remove the key. The loading surface should be horizontal.

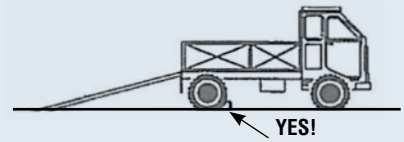

5 Lean the ramps against the truck structure and fix them in place. Check the load bearing capacity of the ramps before using them.

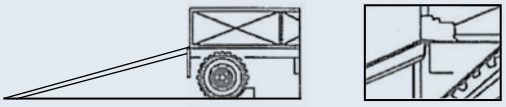

6 When using the ramps, take account of the axle load distribution: the axle under a greater load should always be higher. If there is an attachment available that can stabilise the machine, it should be lower down.

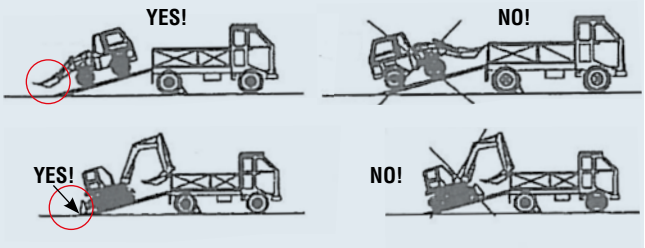

7 Lower scoops and similar attachments and empty them before the loading procedure, even if the gross weight is less than the max. permitted weight.

8 Only drive up and down the ramp under supervision of a second person.

9 Max. permitted speed on ramps: 2 m/min.
Sudden braking or starting must be avoided at all costs.

10 The ramps should not be used as running boards.

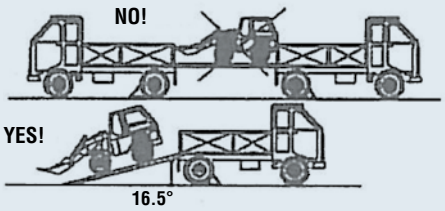

11 The max. permitted height of the higher end of the ramp – in relation to the ground – is not allowed to exceed 1/3 of the length of one ramp.

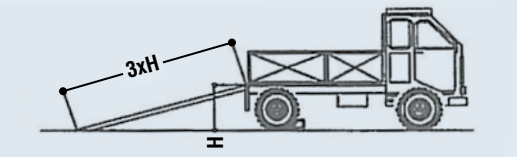

12 After loading, the ramps must be unhooked and placed on the ground. Do not allow ramps to drop onto parts of the body, fixtures or electrical cables.

13 Loading ramps with a weight of more than 30 kg must be moved using lifting gear or with the help of several persons.

Important: Please check the ramps regularly for possible cracks and gap formation.

BOAT ROLLERS

YOUR ADVANTAGE

Advantage	COMPACT boat roller	PROFI boat roller "STOLTZ"
Material	Rubber	Polyurethane
Colour	Black	Transparent yellow
Cushions shocks	Yes	No
Material abrasion on the hull of the boat possible	Yes	No
Extremely high load capacity	No	Yes
Durable and largely wear-free	No	Yes
UV-resistant	No	Yes
Scratch-proof	No	Yes
No deformation of the roller if the boat is stored on the trailer for a long time	No	Yes

Boats are expensive. As a result, you as a professional watersports enthusiast carefully look after your sports equipment in the water. But what about when it comes to transport or storage on the trailer? When transporting, loading and unloading, **appropriate precautions** must be taken to avoid damaging the precious cargo.

As Europe's leading manufacturer of trailer components, AL-KO offers you **two different ranges of professional boat rollers** for this purpose, so you can design the trailer that is optimum for you.

In the **entry-level category,** we can offer you inexpensive boat rollers based on **rubber**. As you would expect, we place the greatest emphasis on quality and safety in this segment too, so we offer you exclusively brand-name products made in Europe.

The **genuine STOLTZ** rollers in the **Profi Line** made from polyurethane offer you absolutely **premium quality;** they have been selected as the winner in many tests and in the Internet forums of the trade press, they are permanently referred to as THE best rollers for boat trailers.

Genuine STOLTZ rollers make loading and unloading child's play. The **extreme ease of movement** means that boats slip easily into the water – so you can save your strength for sports on the water!
You will be delighted to observe that using STOLTZ rollers means that **black stripes** on the hull of the boat caused by launching **are now a thing of the past.**

A **distinctly visible signal** of these famous STOLTZ rollers **is the striking, transparent yellow colour** which makes it clear to everyone that you are a professional watersports enthusiast in the know.



BOAT ROLLERS

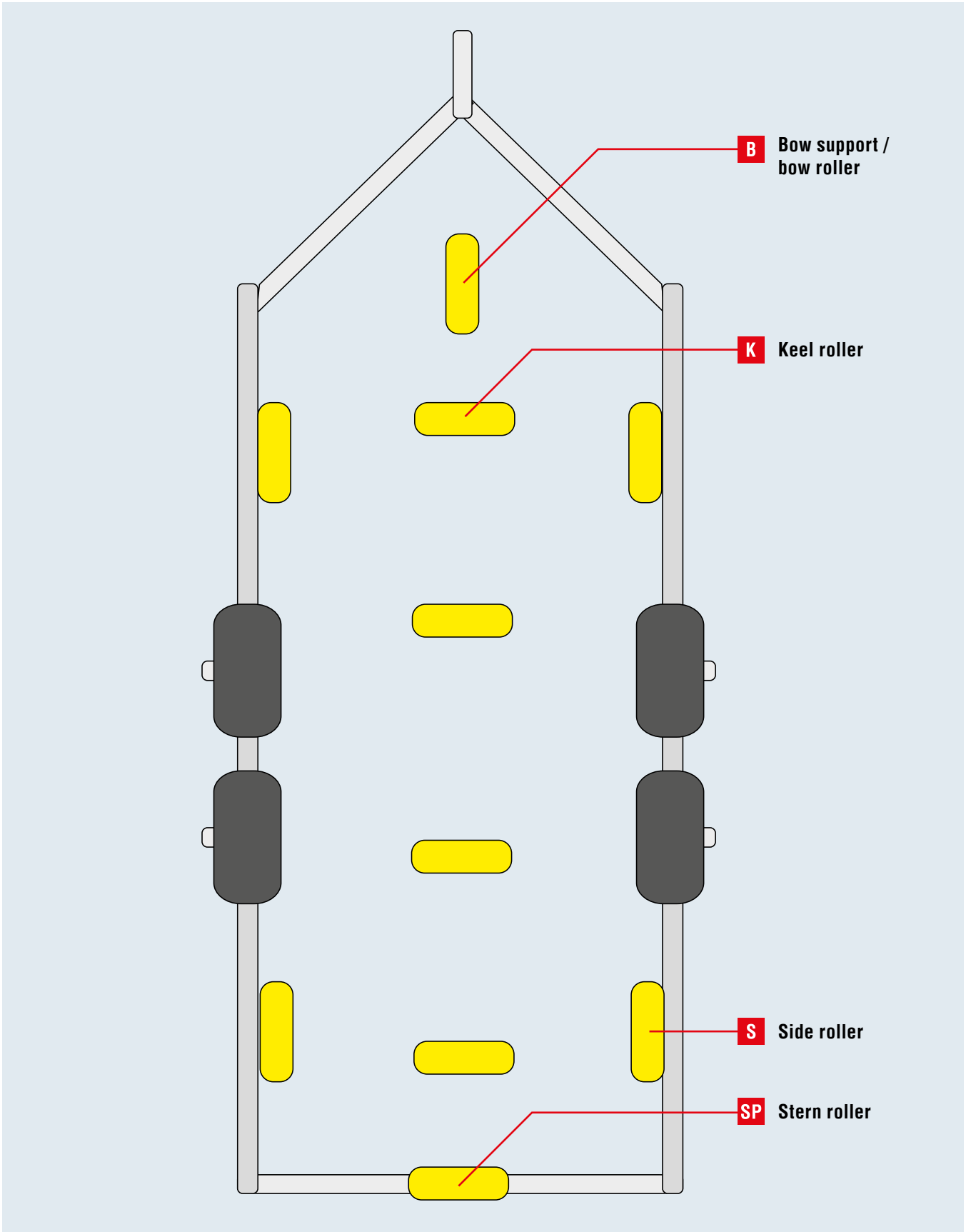

BOAT ROLLERS

SAP: KIELROLLE SCHWARZ

K



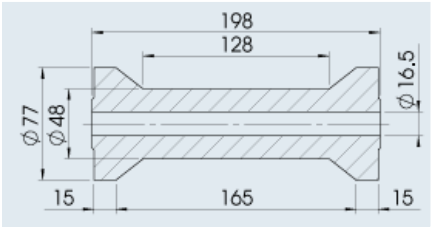

Keel roller	
Part no.	360 710
Material/Surface/Colour	Rubber/matt/black
Dimensions (D x L) / hole	Ø 77 x 198 mm / Ø 16.5 mm
	0.660 kg
	1 unit –

K



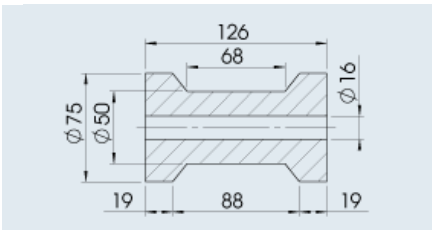

Keel roller	
Part no.	360 711
Material/Surface/Colour	Rubber/matt/black
Dimensions (D x L) / hole	Ø 75 x 126 mm / Ø 16 mm
	0.510 kg
	1 unit –

K



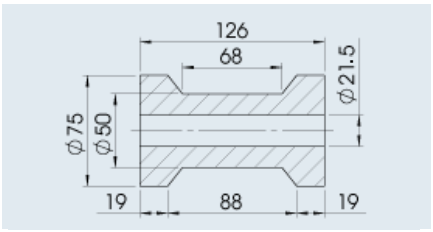

Keel roller	
Part no.	360 712
Material/Surface/Colour	Rubber/matt/black
Dimensions (D x L) / hole	Ø 75 x 126 mm / Ø 21.5 mm
	0.490 kg
	1 unit –

K



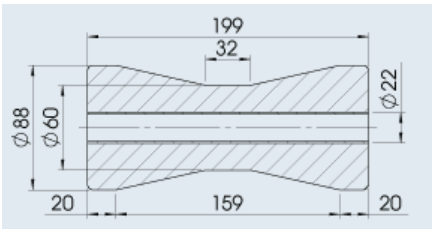

Keel roller	
Part no.	360 713
Material/Surface/Colour	Rubber/matt/black
Dimensions (D x L) / hole	Ø 88 x 199 mm / Ø 22 mm (steel tube)
	1.400 kg
	1 unit –

K



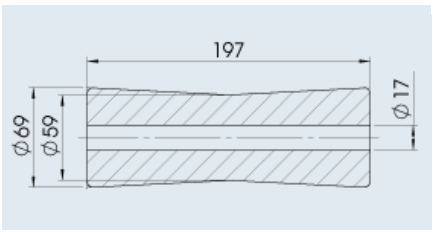

Keel roller	
Part no.	360 715
Material/Surface/Colour	Rubber/matt/black
Dimensions (D x L) / hole	Ø 69 x 197 mm / Ø 17 mm
	0.910 kg
	1 unit –

K



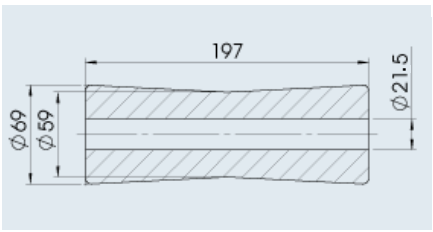

Keel roller	
Part no.	360 716
Material/Surface/Colour	Rubber/matt/black
Dimensions (D x L) / hole	Ø 69 x 197 mm / Ø 21.5 mm
	0.850 kg
	1 unit –

BOAT ROLLERS

SAP: SEITENROLLE SCHWARZ

S

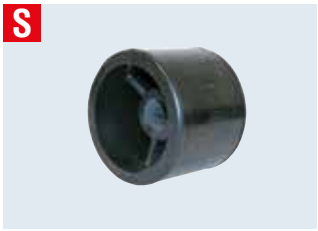

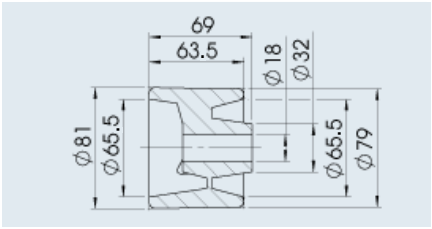

Side roller	
Part no.	360 717
Material/Surface/Colour	Rubber/matt/black
Dimensions (D x L) / hole	Ø 81 x 69 mm / Ø 18 mm
	0.270 kg
	1 unit –

S



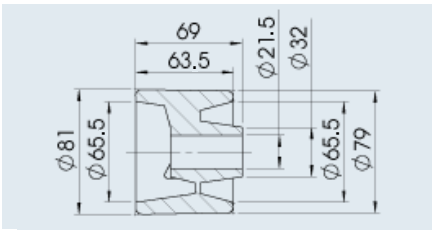

Side roller	
Part no.	360 718
Material/Surface/Colour	Rubber/matt/black
Dimensions (D x L) / hole	Ø 81 x 69 mm / Ø 21.5 mm
	0.260 kg
	1 unit –

S



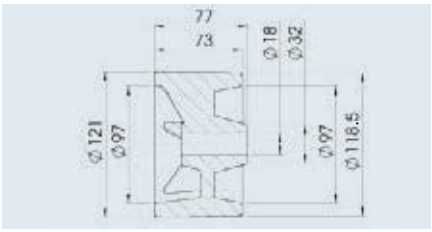

Side roller	
Part no.	360 719
Material/Surface/Colour	Rubber/matt/black
Dimensions (D x L) / hole	Ø 121 x 77 mm / Ø 18 mm
	0.740 kg
	1 unit –

S



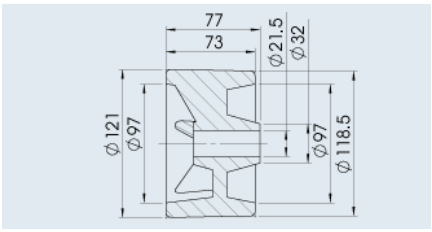

Side roller	
Part no.	360 720
Material/Surface/Colour	Rubber/matt/black
Dimensions (D x L) / hole	Ø 121 x 77 mm / Ø 21.5 mm
	0.720 kg
	1 unit –

SAP: V BUGSTOPPER GRAU

B

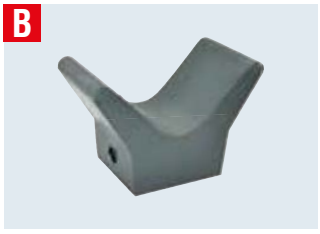

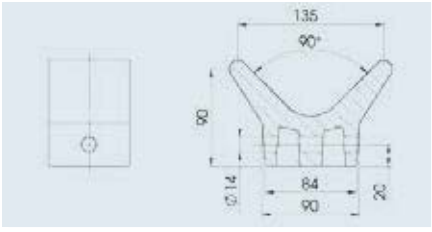

Bow buffer	
Part no.	360 722
Material/Surface/Colour	Rubber/matt/grey
Dimensions (D x L) / hole	Ø 135 x 75 mm / Ø 14 mm
	0.630 kg
	1 unit –

PROFI BOAT ROLLERS

SAP: KIELROLLE RP-



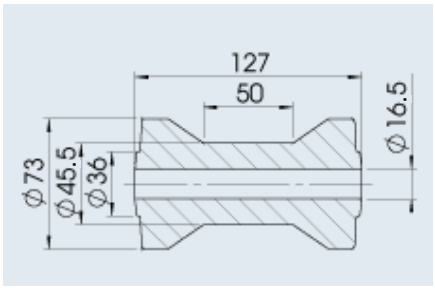

Keel roller type RP-5	
Part no.	1 224 415
Material/Surface/Colour	PU/matt/transparent yellow
Dimensions (D x L) / hole	Ø 73 x 127 mm / Ø 16.5 mm
	0.340 kg
	1 unit –



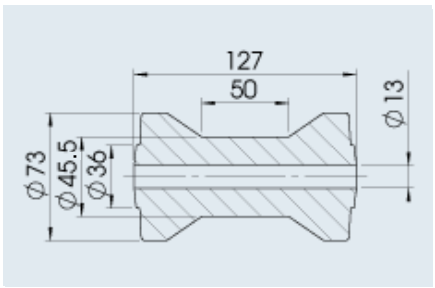

Keel roller type RP-55	
Part no.	1 224 418
Material/Surface/Colour	PU/matt/transparent yellow
Dimensions (D x L) / hole	Ø 73 x 127 mm / Ø 13 mm
	0.350 kg
	1 unit –



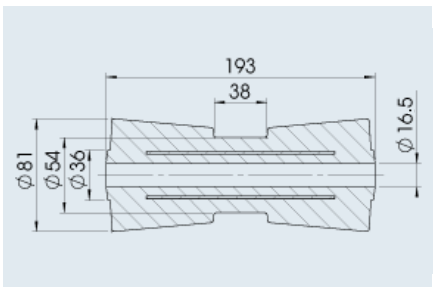

Keel roller type RP-8	
Part no.	1 224 421
Material/Surface/Colour	PU/matt/transparent yellow
Dimensions (D x L) / hole	Ø 81 x 193 mm / Ø 16.5 mm
	0.810 kg
	1 unit –



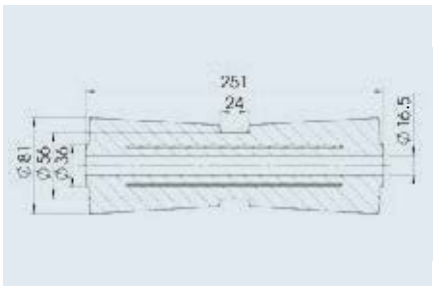

Keel roller type RP-10	
Part no.	1 224 422
Material/Surface/Colour	PU/matt/transparent yellow
Dimensions (D x L) / hole	Ø 81 x 251 mm / Ø 16.5 mm
	1.120 kg
	1 unit –



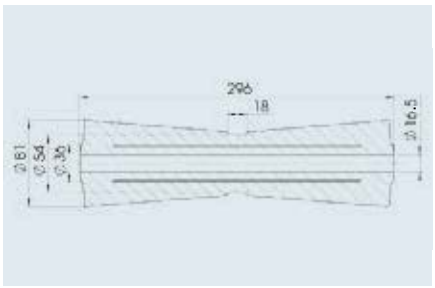

Keel roller type RP-12	
Part no.	1 224 425
Material/Surface/Colour	PU/matt/transparent yellow
Dimensions (D x L) / hole	Ø 81 x 296 mm / Ø 16.5 mm
	1.370 kg
	1 unit –

PROFI BOAT ROLLERS

K



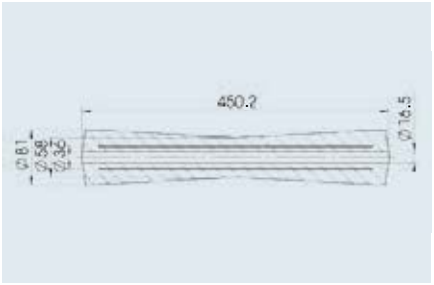

SAP: KIELROLLE RP-

Keel roller type RP-18	
Part no.	1 224 426
Material/Surface/Colour	PU/matt/transparent yellow
Dimensions (D x L) / hole	Ø 81 x 450.2 mm / Ø 16.5 mm
	1.930 kg
	1 unit –

K



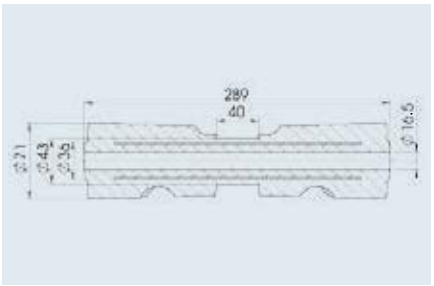

Keel roller type RPSC-12	
Part no.	1 224 424
Material/Surface/Colour	PU/matt/transparent yellow
Dimensions (D x L) / hole	Ø 71 x 289 mm / Ø 16.5 mm
	0.960 kg
	1 unit –

SAP: ROLLE RP-

K
S



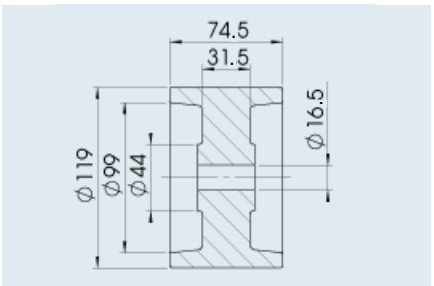

Keel roller type RP-53A	
Part no.	1 224 461
Material/Surface/Colour	PU/matt/transparent yellow
Dimensions (D x L) / hole	Ø 119 x 74.5 mm / Ø 16.5 mm
	0.600 kg
	1 unit –

K
S



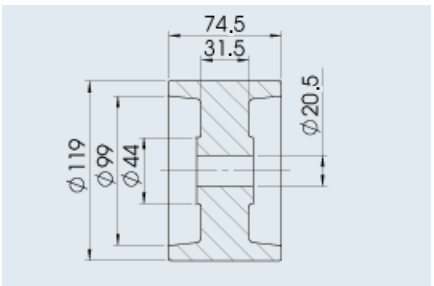

Keel roller type RP-54	
Part no.	1 224 462
Material/Surface/Colour	PU/matt/transparent yellow
Dimensions (D x L) / hole	Ø 119 x 74.5 mm / Ø 20.5 mm
	0.590 kg
	1 unit –

SAP: BUGROLLE RP-33

B



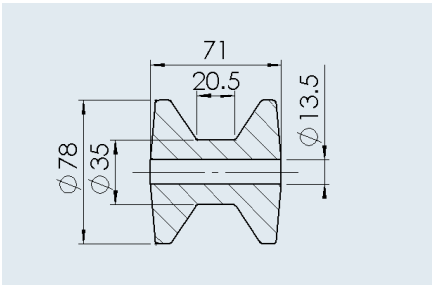

Bow roller type RP-33	
Part no.	1 224 431
Material/Surface/Colour	PU/matt/transparent yellow
Dimensions (D x L) / hole	Ø 78 x 71 mm / Ø 13.5 mm
	0.210 kg
	1 unit –

PROFI BOAT ROLLERS

B
SP



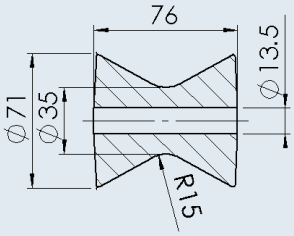

SAP: V ROLLE RP-335

V-roller type RP-335

Part no.	1 224 432
Material/Surface/Colour	PU/matt/transparent yellow
Dimensions (D x L) / hole	Ø 71 x 76 mm / Ø 13.5 mm
	0.190 kg
	1 unit –



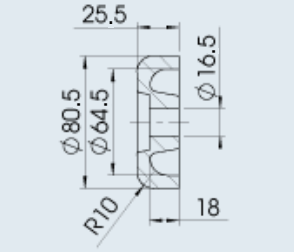

SAP: ROLLE RP-

End cap for RP 8/10/12/18 - type RP-32

Part no.	1 224 444
Material/Surface/Colour	PU/matt/transparent yellow
Dimensions (D x L) / hole	Ø 80.5 x 25.5 mm / Ø 16.5 mm
	0.090 kg
	1 unit –



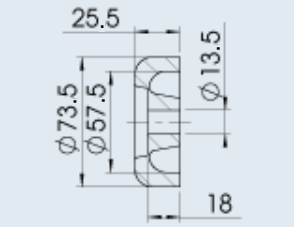

End cap for RP-33+RP-335 type RP-325

Part no.	1 224 433
Material/Surface/Colour	PU/matt/transparent yellow
Dimensions (D x L) / hole	Ø 73.5 x 25.5 mm / Ø 13.5 mm
	0.080 kg
	1 unit –

S



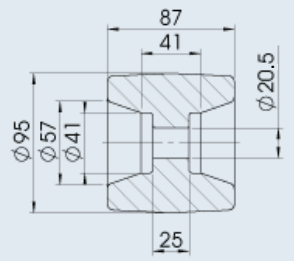

Wobble roller type RP-44

Part no.	1 224 460
Material/Surface/Colour	PU/matt/transparent yellow
Dimensions (D x L) / hole	Ø 95 x 87 mm / Ø 20.5 mm
	0.550 kg
	1 unit –

B



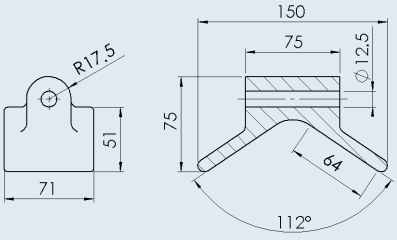

SAP: V BUGSTOPPER RP-3

V bow buffer type RP-3

Part no.	1 224 429
Material/Surface/Colour	PU/matt/transparent yellow
Dimensions (D x L) / hole	150 x 71 mm / Ø 12.5 mm
	0.220 kg
	1 unit –

PROFI BOAT ROLLERS

B



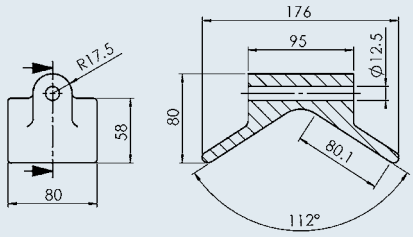

SAP: V BUGSTOPPER RP-404

V bow buffer type RP-404

Part no.	1 225 124
Material/Surface/Colour	PU/matt/transparent yellow
Dimensions (D x L) / hole	176 x 80 mm / Ø 12.5 mm
	0.330 kg
	1 unit –

SP



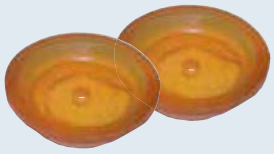

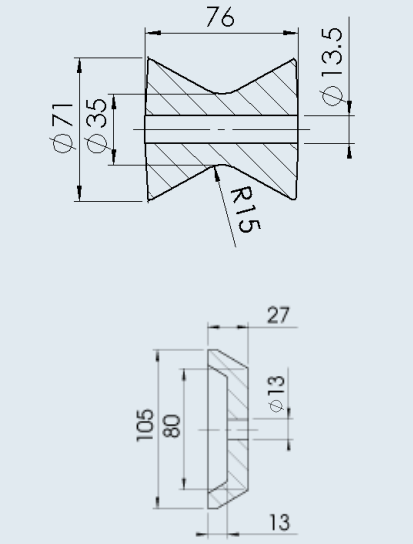

SAP: V ROLLE RP-335

Set of stern rollers large type RP-335

Part no.	1 224 432
Material/Surface/Colour	PU/matt/transparent yellow
Dimensions (D x L) / hole	Ø 71 x 76 mm / Ø 13.5 mm
	0.190 kg
	1 unit –

SAP: ENDKAPPE RP-435A - 2STÜCK

End cap RP-435A (2 units)

Part no.	1 224 434
Material/Surface/Colour	PU/matt/transparent yellow
Dimensions (D x L) / hole	Ø 105 x 27 mm / Ø 13 mm
	0.140 kg
	2 units –

SP

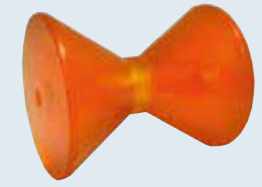

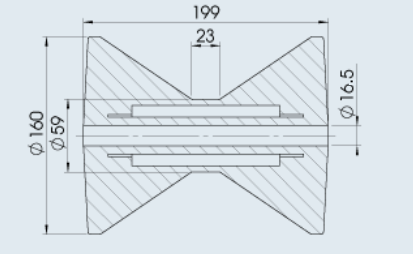

SAP: ROLLE RP-87

V-roller type RP-87

Part no.	1 224 452
Material/Surface/Colour	PU/matt/transparent yellow
Dimensions (D x L) / hole	Ø 160 x 199 mm / Ø 16.5 mm
	2.190 kg
	1 unit –

18. AUTHORISATION AND INSTALLATION NOTES

AUTHORISATION AND INSTALLATION NOTES

General notes on European registration regulations	594 – 595
Brake calculation	596
Criteria for stable driving properties for a trailer	597
Position of the trailer coupling point coupling point position in the trailer	598
Permitted articulation for trailer coupling heads	599
AL-KO axles – Bodywork regulations	600
Axle Bowden cables – Mounting	601
Axle shock absorbers – Mounting	602 – 603
Lowering axles – Mounting instructions	604 – 608
Hydraulic component sets – AL-KO recommendations	609 – 611
Chassis with height-adjustable drawbar for trailers with pneumatic brakes	612
Technical notes for trailers with pneumatic brakes	613 – 615
Installation suggestions for trailers with pneumatic brakes	616 – 618
Tyres and rims for trailers with pneumatic brakes	619
Tyres for trailers up to 3.5 t – car as towing vehicle	620
Installation and setting instructions for the mechanical brake system	621 – 624
Notes	*625 – 626*

GENERAL NOTES

on European registration regulations in the car trailer area

ECE Directive

The overrun devices and wheel brakes in this catalogue comply with the ECE-R13 / ECE-R55 guidelines with all supplements.

COUNTRY-SPECIFIC REGULATIONS FOR TRAILER REGISTRATION CAN BE FOUND IN:



Belgium / Netherlands

	To be requested from:
I In all cases: ECE-tested drawbar, drawbar shaft and hitches	corresponding manufacturer
I In the case of ECE type approval: UN/ECE-tested brake system	corresponding manufacturer
I In case of an individual acceptance or NKS test (national small series), an RDW test report may be sufficient for the Netherlands	corresponding manufacturer



Bulgaria

	To be requested from:
I Brake calculation according to ECE-R13 Directive	corresponding manufacturer



Denmark

	To be requested from:
I Brake calculation according to ECE-R13 guideline	Overrun device manufacturer



Germany

	To be requested from:
I Brake calculation according to ECE-R13 guideline	Manufacturer
I Type approval according to ECE-R55-01 for all vehicle connecting parts, e.g. coupling head, drawbar, drawbar installation and drawbar	



France

	To be requested from:
Original warranty for	
I Confirmation of permitted axle load	Axle manufacturer
I Strength calculation for drawbar according to directive dated 28/02/1986	Drawbar manufacturer
I Brake calculation according to ECE-R13 guideline	Overrun device manufacturer



United Kingdom

	To be requested from:
I Brake calculation according to ECE-R13 guideline	Overrun device manufacturer



Italy

	To be requested from:
I Brake calculation according to ECE-R13 guideline	Overrun device manufacturer
I Coupling head with I-test no. or according to Directive ECE-R55	corresponding manufacturer

All documents must be issued in Italian. These documents can be requested from the corresponding trailer importer at our branch in Vintl.



Austria

	To be requested from:
I Brake calculation according to ECE-R13 Directive with EC supplement	Overrun device manufacturer
I Special regulation on trailer loads (mass of motor vehicle in relation to mass of trailer)	Please find out from the corresponding authorities.

	**Poland** I Technical report for overrun device and wheel brake according to ECE-R13 Directive	**To be requested from:** Ministry of Transport
	**Romania** I Brake calculation according to ECE-R13 Directive	**To be requested from:** corresponding manufacturer
	**Russia** I Brake calculation according to ECE-R13 Directive I GOST 37.001.220 - 97 of 1997 (Russian industry standard for car trailers)	**To be requested from:** corresponding manufacturer corresponding manufacturer
	**Sweden** I Brake calculation according to ECE-R13 Directive	**To be requested from:** Overrun device manufacturer
	**Switzerland** Original warranty for I Confirmation of permitted axle load I Confirmation of nose load and pulling force on the drawbar as well as overrun devices I Confirmation of nose load and pulling force of the coupling head (also DIN drawbar eye) I Schematic drawing of the service and handbrake system with specification of the ratio and effective brake surface area	**To be requested from:** Axle manufacturer Overrun device manufacturer corresponding manufacturer Overrun device manufacturer
	**Slovakia** I Certificate number for axle, overrun device, coupling head, wheels and lighting (according to Directive 315/1996)	**To be requested from:** Ministry of Transport
 	**Spain/Portugal** I Brake calculation, according to ECE-R13 Directive from the overrun device manufacturer, diagram for central tube drawbars with braked and unbraked trailers, corresponding manufacturer's general operating permit for all vehicle-connecting parts, e.g. coupling head, drawbar, drawbar installation	**To be requested from:** corresponding manufacturer
	**Czech Republic** I Brake calculation according to ECE-R13 Directive I Czech report for coupling head, overrun device, axle	**To be requested from:** Overrun device manufacturer Corresponding manufacturer (or importer)

This information is in line with the status of our knowledge as at January 2018. Technical modifications reserved!

BRAKE CALCULATION

according to ECE-R13 Directive

NOTE

Please provide us with the following information to carry out the brake calculation:

1. Type of overrun device, e.g. 161 S vers. A
2. Type of wheel brake, e.g. 2051 vers. A
3. Single axle or tandem trailer = number of wheel brakes
4. Permitted gross weight of the trailer, e.g. 1300 kg
5. Tyres used, e.g. 175 R 14

ECE-R13 Annex 12 App. 4

Report on the compatibility of the overrun device, the transmission device and the brakes on the trailer

Calculation no.:	693767 02a		
Author		Date:	

1. Overrun device		**2. Brakes**	
Manufacturer	ALOIS KOBER GMBH	Manufacturer	ALOIS KOBER GMBH
Type	161 S vers. A	Type	2051 vers. A,b
ECE test report no.	361-0047-97	ECE test report no.	361-0031-92
Min. perm. gross weight G_{Amin}	950 kg	Perm. gross weight G_{BO}	750 kg
Max. perm. gross weight G_{Amax}	1600 kg	Braking torque M*	1700 Nm
Perm. stat. nose load S	100 kg	Min. dyn tyre radius R_{Min}	0.280 m
Overrun travel s‘	85 mm	Max. dyn tyre radius R_{Max}	0.321 m
Efficiency η_{H0}	0.940	Min. brake application stroke s_{B*}	1.6 mm
Response threshold K_A	330 N	Travel ratio i_g	15.55
Max. compression force D_1	800 N	Reset force P_0	0 N
Max. pulling force D_2	2750 N	Characteristic value ρ	720 mm
Tensile force K	200 N	Max. braking torque M_r	21 Nm
Travel ratio i_{HO}	= (L1) / (L2) = (90) / (27) = 3.33	Max. permitted travel s_r	27 mm

3. Transmission device			
ECE test report no.	361-120-12	Travel ratio i_{H1}	1.00
		Efficiency η_{H1}	1.00

4. Trailers			
Manufacturer		Min. gross weight G_{Amin}	900 kg
Factory brand		Max. gross weight G_{Amax}	1500 kg
Type			
Type of drawbar connection:	Trailer with rigid drawbar	Min. dyn tyre radius R_{Min}	0.280 m
Number of brakes	**n = 2**	Max. dyn tyre radius R_{Max}	0.321 m

5. Allocation - Test results

Max. perm. gross weight G_A	Perm. drawbar force $D^*=0.1 \bullet g \bullet G_A$	Brake force $B = 0.49 \bullet g \bullet G_A$	Response threshold $100 \bullet KA / (G_A \bullet g)$ $2 < X < 4$	Force transmission (with R_{Max} = 0.321 m) i_{HK}	Largest compression force $100 \bullet D_1 / (G_A \bullet g)$ $X \le 10$	Largest pulling force $100 \bullet D_2 / (G_A \bullet g)$ $10 < X < 50$
[kg]	[N]	[N]				
950	932	4567	3.54	2.96	8.58	29.51
1000	981	4807	3.36	2.92	8.15	28.03
1100	1079	5288	3.06	2.85	7.41	25.48
1200	1177	5768	2.80	2.80	6.80	23.36
1300	1275	6249	2.59	2.76	6.27	21.56
1400	1373	6730	2.40	2.72	5.82	20.02
1500	1472	7210	2.24	2.69	5.44	18.69

Maximum technically permissible gross weight for the overrun device G'_A =	G_{Amax} =	1600 kg	(≥ 1500)
Maximum technically permissible gross weight for all trailer brakes G_B =	$G_{BO} \bullet n$ =	1500 kg	(≥ 1500)
Braking torque of the brakes M_{BRMax} =	$M^* \bullet n / (B_{max} \bullet R_{Max})$ =	1.47 Nm	(≥ 1.00)
Braking torque when pushing back the trailer including the rolling resistance of MR_{max} =	$0.08 \bullet g \bullet G_{Amin} \bullet R_{Min} / n$ =	98.88 Nm	(≥ 21.00)
Total ratio i_H =	$i_{Ho} \bullet i_{H1}$ =	3.33	
Total efficiency η_H =	$\eta_{Ho} \bullet \eta_{H1}$ =	0.940	
Force ratio i_{HK} =	$(B \bullet R_{Max} / \rho + n \bullet P_0) / (D^* - K) / \eta_H$ =	see table	(≤ 3.33)
Travel ratio i_{HW} =	$s‘ / (s_B^* \bullet i_g)$ =	3.42	(≥ 3.33)
Ratio when pushing back the trailer =	$s‘ / i_H$ =	26 mm	(≤ 27)

An overload protection device in accordance with paragraph 3.6 of this Annex is not fitted to the overrun devices or brakes.

6. Differential travel at standard brake compensation

Max. permissible travel at compensation (forwards)	s_{cf} =	18 mm
Max. permissible travel at compensation (backwards)	s_{cr} =	27 mm
Max. permissible differential travel at compensation	s_{cd} =	32.4 mm

7. The performance of this test and the disclosure of the results were carried out in accordance with the relevant provisions of Annex 12 to ECE Directive No. 13, as last amended by Amendment No. 11 with supplement 7.

CRITERIA FOR STABLE DRIVING PROPERTIES

for trailer

CAR

1. Heavy weight
2. Large wheelbase
3. Small overhang
4. Correct tyre pressure
5. Correct function of the shock absorbers

Trailers

1. Low weight
2. Long drawbar
3 Low centre of gravity
4. Utilise max. permitted nose load
5. Large tyres
6. Wheel shock absorbers
7. Optimum loading (heavy items close to the axle)
8. AL-KO hexagonal rubber suspension axle system
9. AKS stabiliser – swaying and pitching movements are effectively suppressed

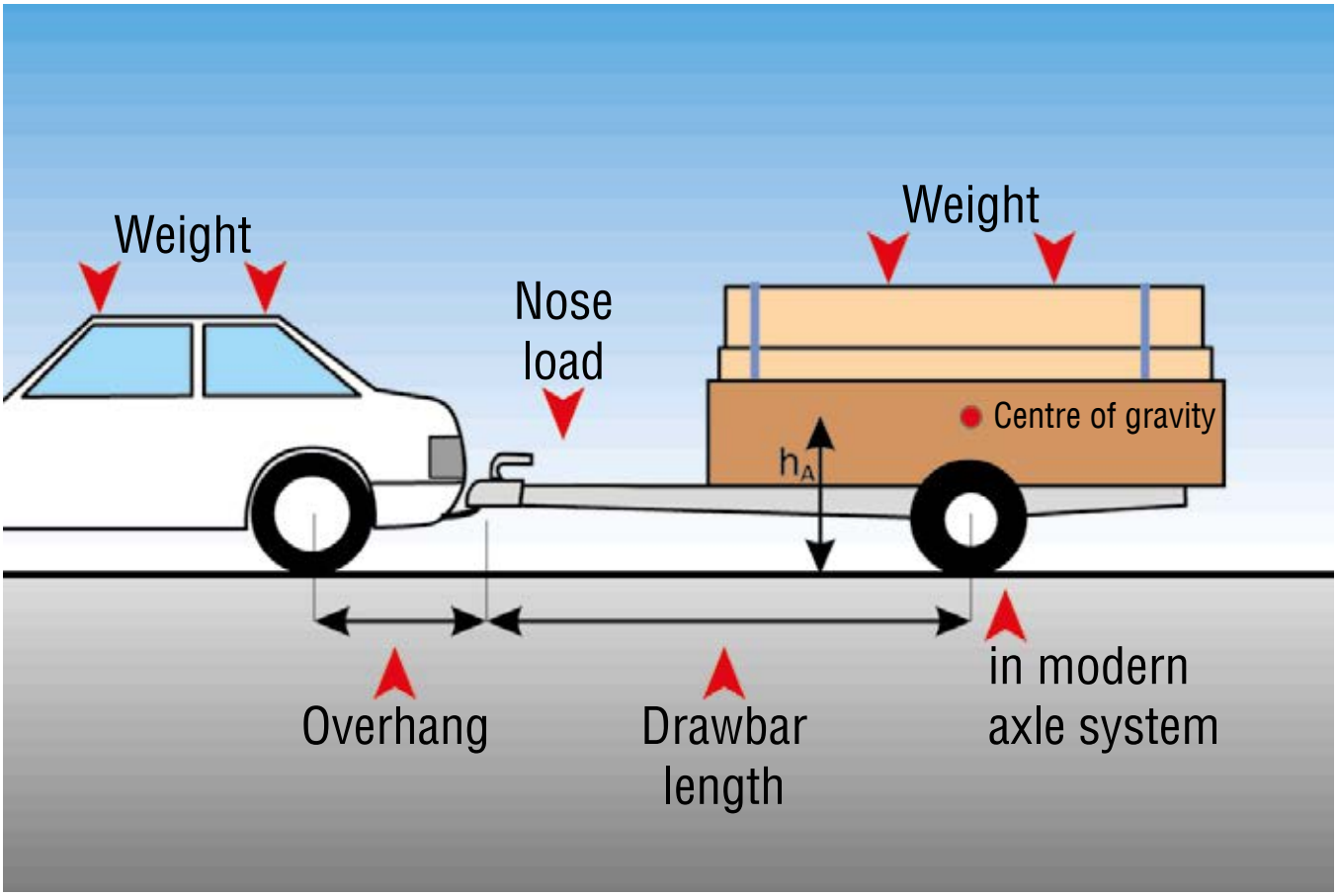

COUPLING POINT POSITION IN THE TRAILER

Nose load and axle position

YOUR ADVANTAGE

Coupling point position in the finished trailer

Important to remember!
According to ECE-R55, the coupling point position in the finished trailer should be 430 ± 35 mm above the horizontal plane on which the wheels of the trailer rest.
Parameters:

- Trailer body aligned horizontally.
- Trailer loaded to the full permitted gross weight.
- Tyre pressure as specified by the manufacturer.

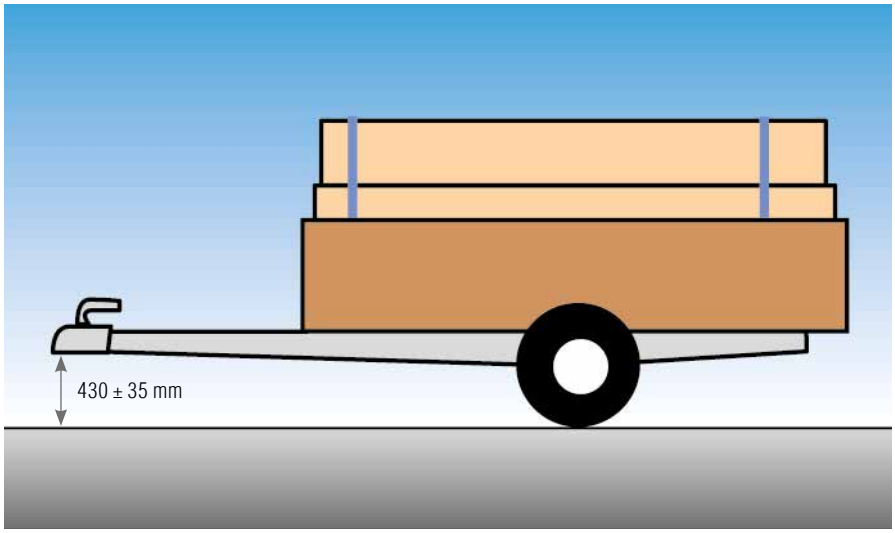

YOUR ADVANTAGE

Nose load and axle position

Determination of the axle position
to regulate the nose load
(recommended 25–50 kg)

Axle position: $B = \frac{S \cdot A}{G_A}$

Example:
Single-axle trailer with 1,000 kg gross weight should be given the nose load of 50 kg.
(Dimension A = 1,800 mm)
Searching for dimension B?

$$B = \frac{S \cdot A}{G_A} = \frac{50\ kg \cdot 1800\ mm}{1000\ kg} = 90\ mm$$

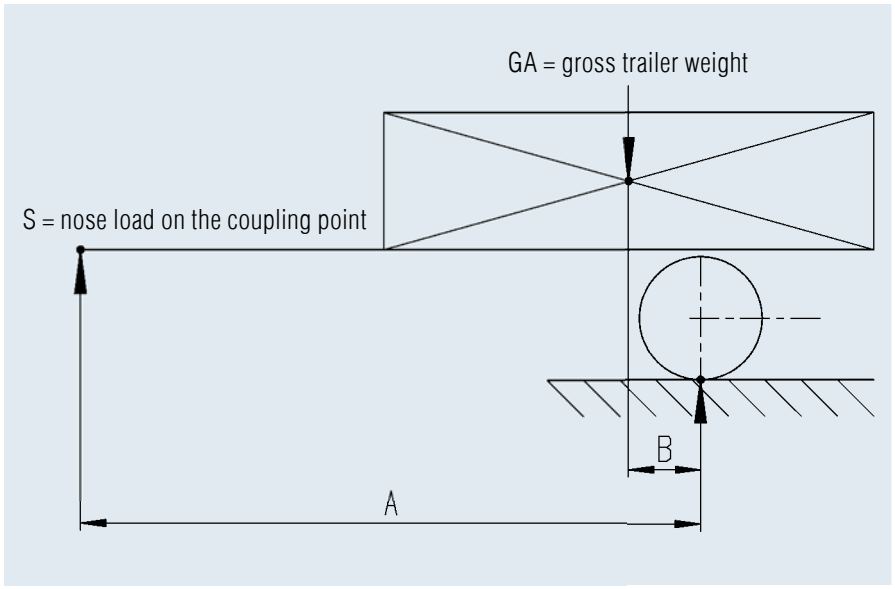

PERMITTED ARTICULATIONS

for trailer coupling heads

Permitted articulations for coupling heads

Important: Exceeding the articulation range overloads the components and means correct function is no longer guaranteed.

Vertical ±25°

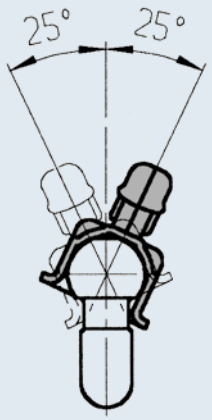

Horizontal ±20°

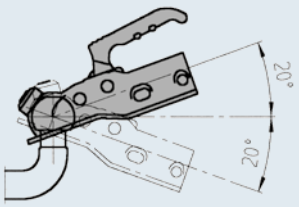

§ Acceptance of the mounting

All hitches are ECE-tested, which means they can also be retrofitted or converted. It is a prerequisite for this that the mounting positions of the old and new hitches, and their load capacity, must match.

As a rule, the hitch type is not defined in the vehicle registration document, i.e. there is no need for an entry to be made for the new hitch. In individual cases, the old hitch type is documented. In this case, the mounting of the new hitch must be checked (by an officially recognised expert) and registered.

AL-KO AXLES

Bodywork regulations

TECHNOLOGY

- Axle:
  Trailing arm (rubber and steel spring)
- Swing arm length:
  of 130 mm – 200 mm (dimension h)
- Swing arm position:
  0° – 35° (dimension i)

- **Technical notes**
  Wheel arch sizes for Delta semi-trailing arm axles, please contact the delivery plant.

Wheel arch clearance = dimension X mm

Swing arm length h	Position 1 Minimum dimension ~X	Position 2 perm. GA ~X	Position 3 Max. deflection ~X
130	110	60	20
145	120	70	20
160	130	80	20
175	140	85	20
200	150	90	20

DRIVING DIRECTION

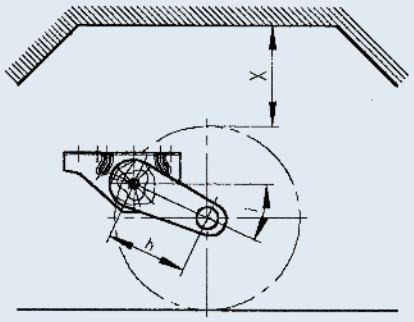

Position 1 = Resetting, i.e. axle not installed (original delivery condition)

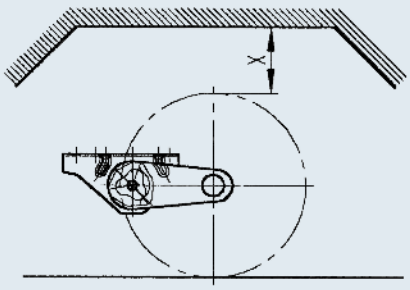

Position 2 = Nominal load, i.e. axle installed and fully loaded (= perm. GA)

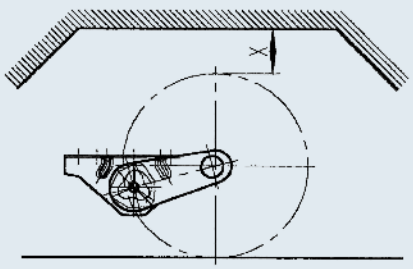

Position 3 = maximum deflection

Frame bodywork regulations

Our axles are equipped with different clamping mount variants. Please consider that the vertical crosspiece of your frame must be located directly on the vertical crosspiece of our axle bracket *(see graphics)*.

Failure to comply represents a risk of accidents (the axle bracket can break).

Clamping mount variant

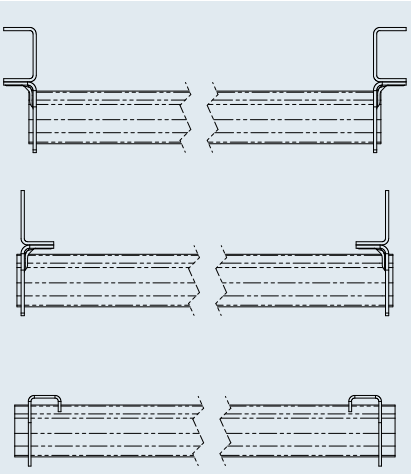



In axles with a tall bearing block, we recommend reinforcing the axle bracket according to the diagram.

AXLE BOWDEN CABLES

Mounting instructions

HOOK IN BOWDEN CABLE

1. Remove cover cap

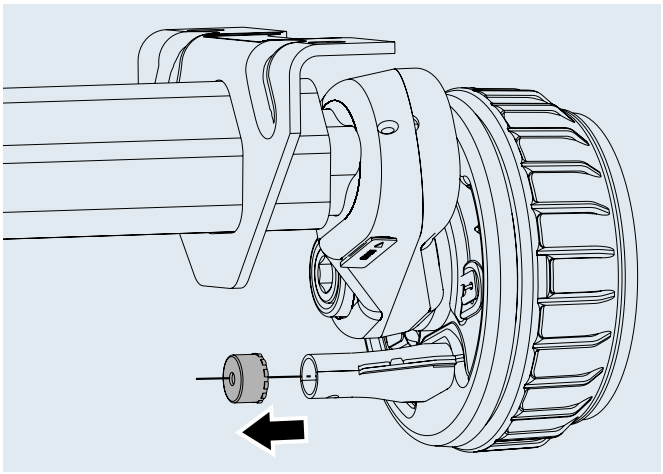

2. Remove top part

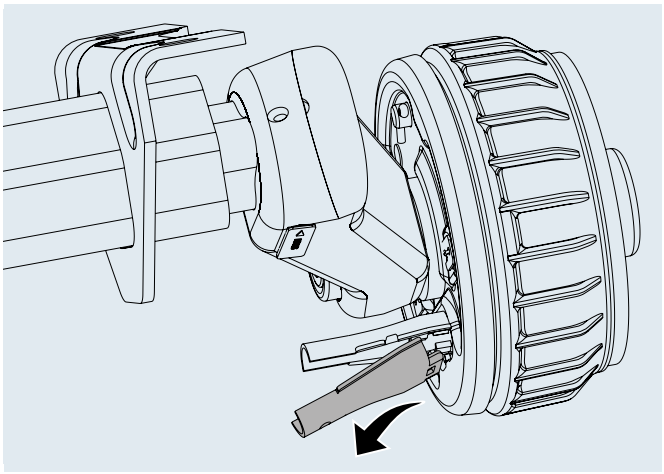

3. Hook in Bowden cable nipple

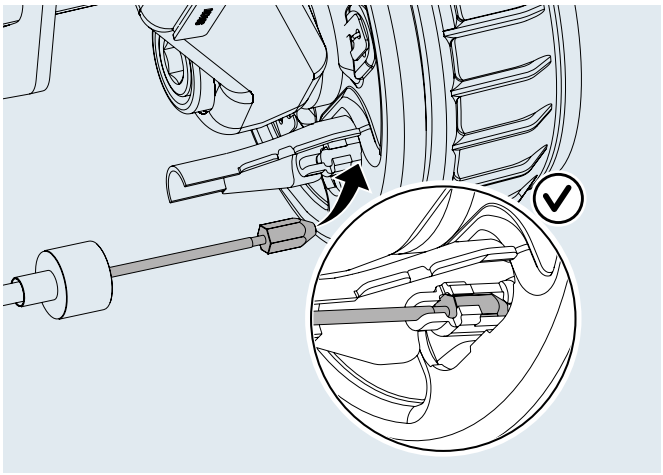

4. Insert top part

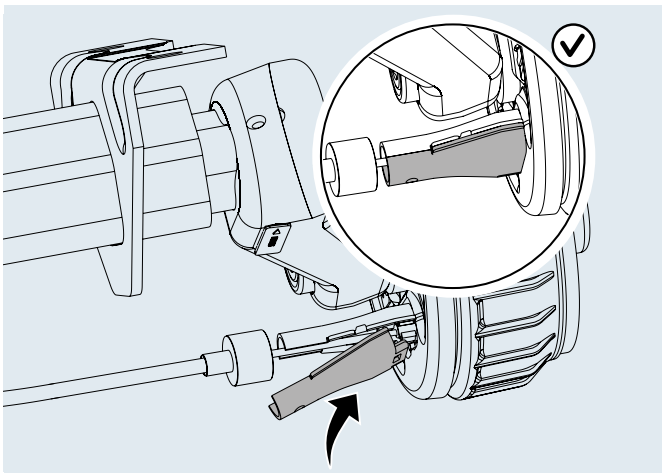

5. Push grommet over the top

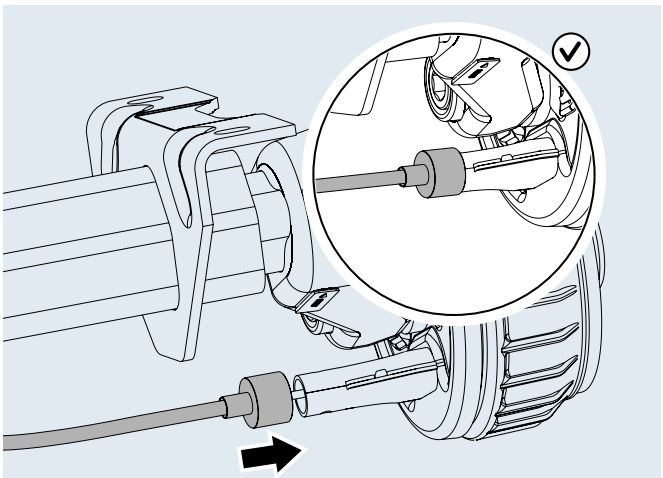

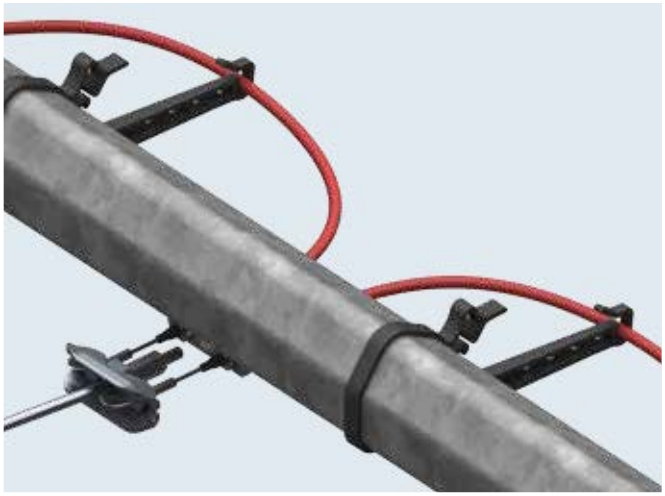

AXLE SHOCK ABSORBER

Mounting

AL-KO axle shock absorbers can be used for almost all trailer axles.
The sketches (page 603 below) inform you about which installation variants are available.

Attachment to the swing arm on AL-KO axles
On AL-KO axles, there are three attachment options for the shock absorber brackets on the swing arm:

1. Bolt-on shock absorber brackets
In certain forged swing arms, mounting holes are provided that make it possible to subsequently screw on a shock absorber bracket.

2. Plug-on shock absorber bracket



On axles with hollow swing arm. This equates to trouble-free retrofitting without welding.
In various hollow swing arms, the mounting holes are provided making installation of the shock absorbers easy.

3. Shock absorber bracket for welding on



Welded shock absorber brackets for axles with forged swing arms.

For axles with forged swing arms, shock absorber brackets are welded during the building of the axle. They can also be welded by a specialist workshop during retrofitment.

In axles with a 5° swing arm position, it is also possible to retrofit a shock absorber. Please contact us directly regarding the add-on guidelines.

Counter-mounting on the vehicle frame of the trailer manufacturer
Attachment of the shock absorber on the vehicle frame must be coordinated with the vehicle manufacturer. According to the installation situation, AL-KO uses holding bars that are welded onto the frame by the vehicle manufacturer (part no. 1 312 110) for this purpose.

Conceivable applications
- Long high-volume bodies with a high centre of gravity (high-loader)
- Trailer for transporting mini diggers (risk of exceeding payload capacity)
- Turntable drawbar trailers (risk that the payload will not be evenly distributed when loading).

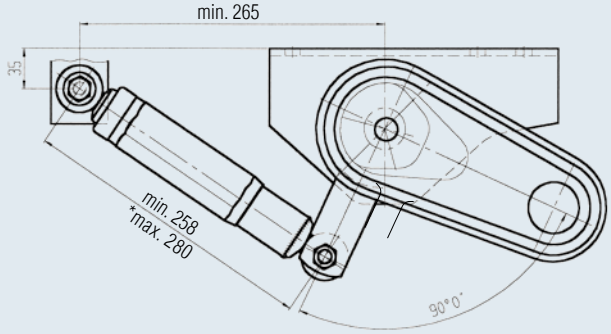

Important:
Always mount bolt head on the tyre side!
Distance between bolt head and tyre at least 16 mm!
Failure to comply represents a danger of accident!

Installation dimensions in side view with unladen axle link and a *25° swing arm position!

SHOCK ABSORBER BRACKET



1 211 502
Bolt-on



244 088
Plug-in



1 211 257
Plug-in



208 631 02 02
For welding on



1 312 110
For welding on

Shock absorber brackets for AL-KO axle links and holding bars for trailer frame (25° or 20° swing arm position)

Axle type	possible swing arm versions	Type of retrofit	Outside mounting Dimen-sion X	Outside mounting part no. shock absorber brackets for axle links	Inside mounting dimen-sion Y	Inside mounting part no. shock absorber brackets for axle links	Part no. holding bars for trailer frame
B 700	Solid swing arm with mounting hole	Bolt-on shock absorber bracket	20-50mm	per set = 2 units 1 211 502 (straight)	–	–	per unit 1 312 110
B 850	Hollow swing arm with mounting hole	Plug-in shock absorber bracket	40-70 mm	per unit 244 088 (straight)	0-50mm	per set = 2 units 1 211 257 (with spacer bush)	per unit 1 312 110
B 1000 B 1200	Hollow swing arm with mounting hole	Plug-in shock absorber bracket	40-70 mm	per unit 244 088 (straight)	0-50mm	per set = 2 units 1 211 257 (with spacer bush)	per unit 1 312 110
B 1600	Hollow swing arm with mounting hole	Plug-in shock absorber bracket	40-70 mm	per unit 244 088 (straight)	0-50mm	per set = 2 units 1 211 257 (with spacer bush)	per unit 1 312 110
B 1000 B 1200	Forged swing arm	Welded Shock absorber bracket	50-80 mm	per unit 208 631 02 02 (straight)	20-60 mm	per unit 228 468 02 02 (cranked)	per unit 1 312 110
B 1600 B 1800	Forged swing arm	Welded Shock absorber bracket	50-80 mm	per unit 208 631 02 02 (straight)	20-60 mm	per unit 228 468 02 02 (cranked)	per unit 1 312 110
B 2500	Forged swing arm	Welded Shock absorber bracket	40-70 mm	per unit 208 631 02 02 (straight)	10-50mm	per unit 228 468 02 02 (cranked)	per unit 1 312 110

Shock absorber mounting from outside

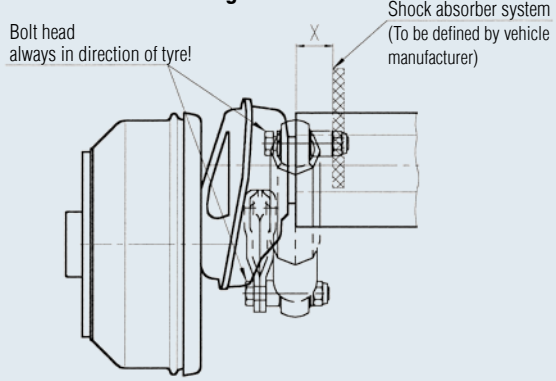

Dimension X: from outside edge of axle tube to shock absorber system

Shock absorber mounting from inside

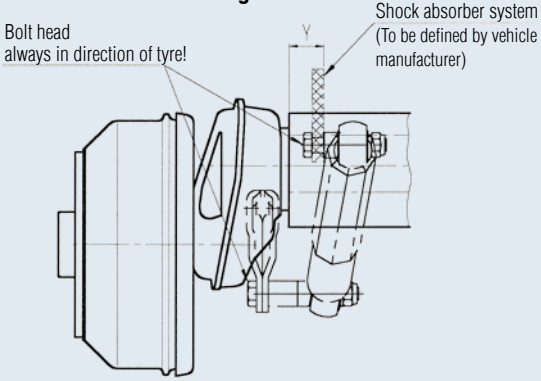

Dimension Y: from outside edge of axle tube to shock absorber system (inner side)

LOWERING AXLES

Mounting the cylinder in a single axle trailer

Mounting the cylinder in a single axle trailer

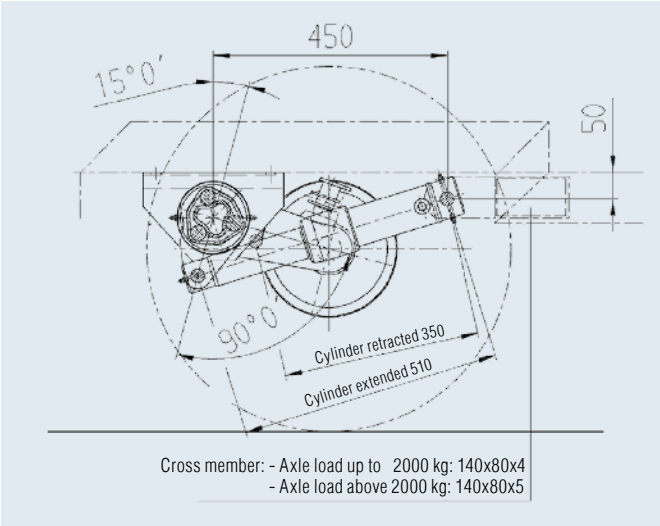

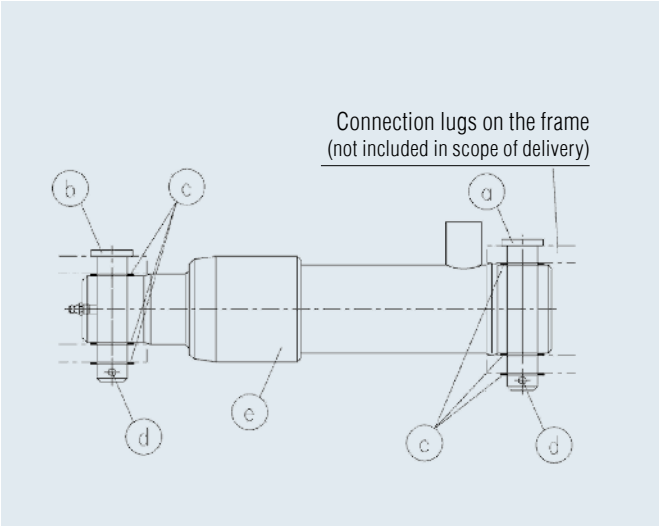

Supplied with the axle		
Item	**Quantity**	**Designation**
a	2	Bolt
b	2	Bolt
c	12	Washer
d	4	Split pin
e	2	Hydraulic cylinder

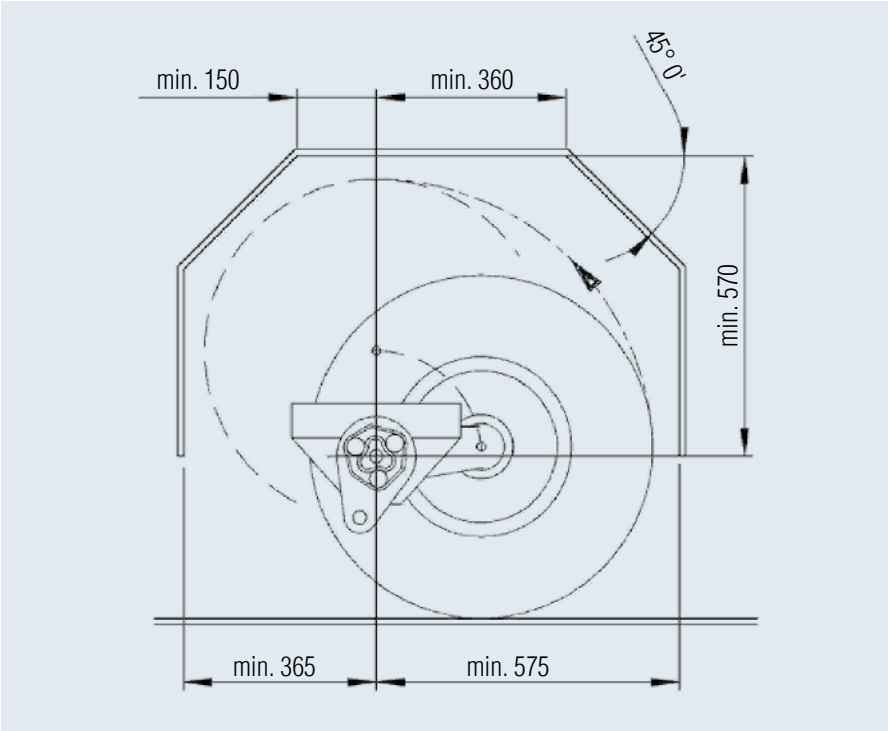

Note the wheel arch clearances

The wheel arch must be configured accordingly with other tyres *(see diagram)*.
Particular attention must be paid to the articulations *(see diagram)*.

The specified dimensions apply to
215 R 14 C tyres!

LOWERING AXLES

Mounting of the cylinder for tandem axles

Mounting of the cylinder for tandem axles

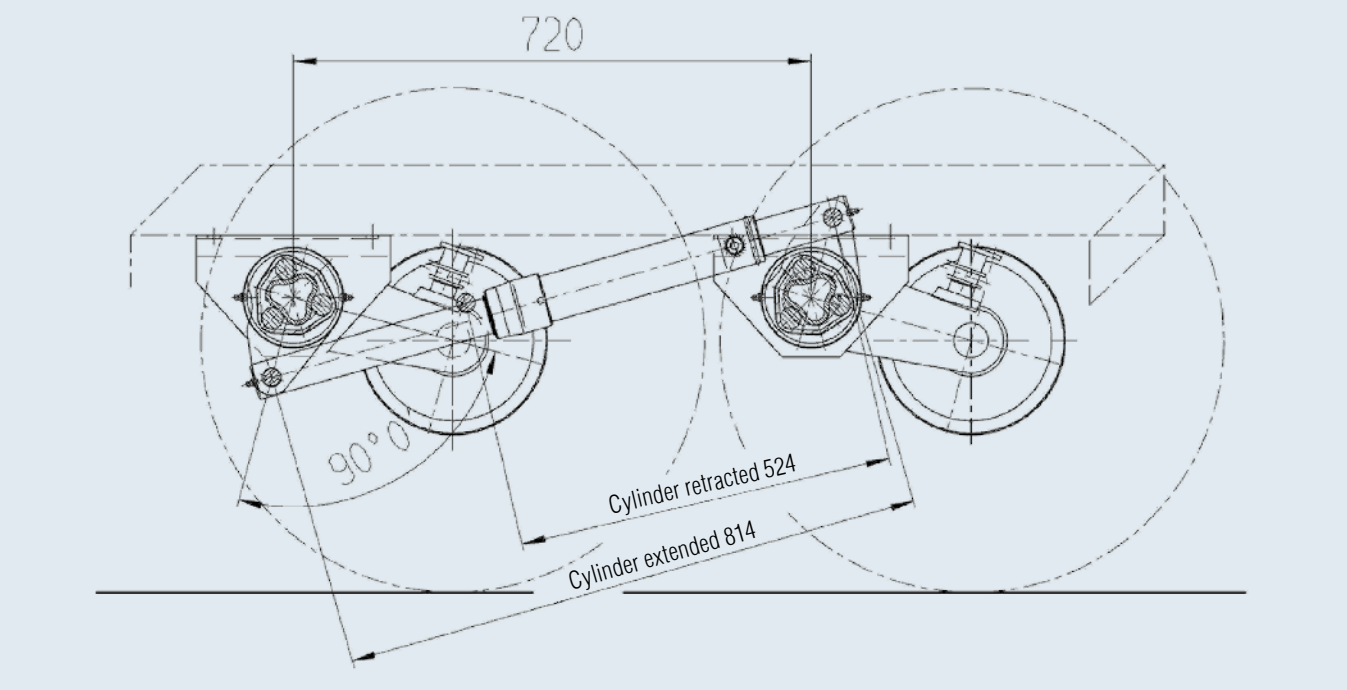

Mounting Jockey wheel

- In the lowered condition, the lowest point is the bottom edge of the frame. As a result, the jockey wheel must be mounted as high up as possible.
- The jockey wheel is involved in the lowering procedure. As a result, a very stable version should be used.

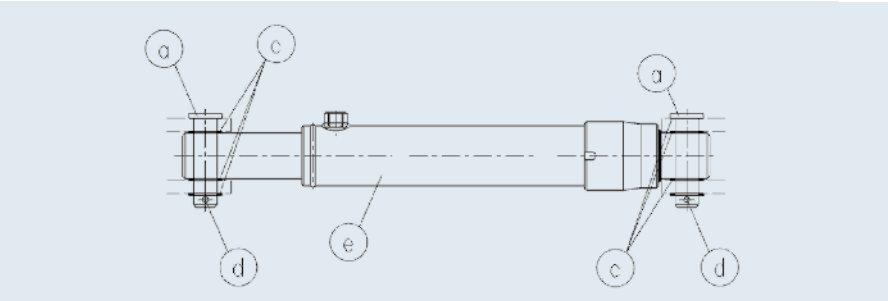

Supplied with the axle		
Item	**Quantity**	**Designation**
a	4	Bolt
c	12	Washer
d	4	Split pin
e	2	Hydraulic cylinder

Mounting Axles

- In tandem axles, the axle distance (front-rear axles) of 720 ±1 mm must be strictly maintained.
- The tyre radius is not allowed to be less than R stat. 300 mm
- In catalogue axles, the frame width or body width is not allowed to project more than 30/40 mm beyond the support centre on either side. Larger body widths on request.
- The cylinder spacing must be observed without fail (especially in tandem axles if the frame is offset to the inside away from the support centre). Other spacings on request.
- AL-KO axles have a toe-in, which means they must be installed trailing.

LOWERING AXLES

Mounting Axle Bowden cables

Single axle trailer

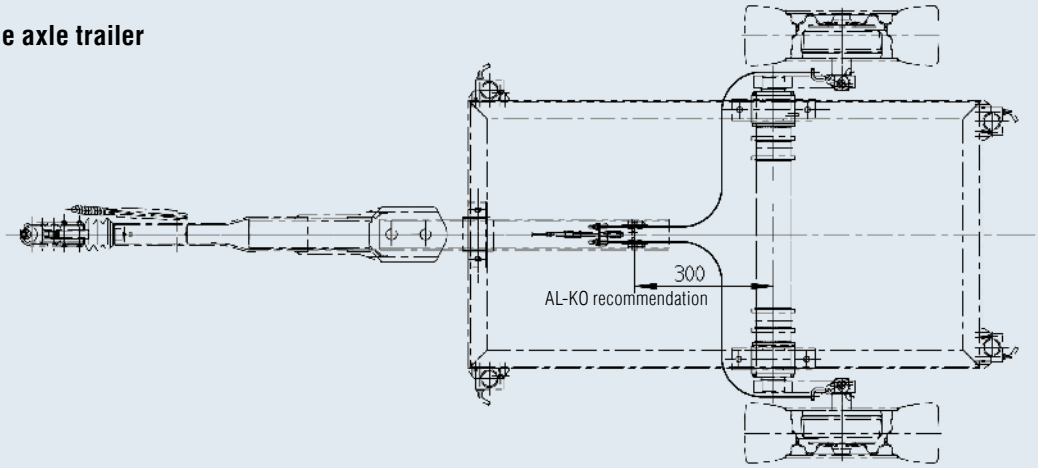

Tandem

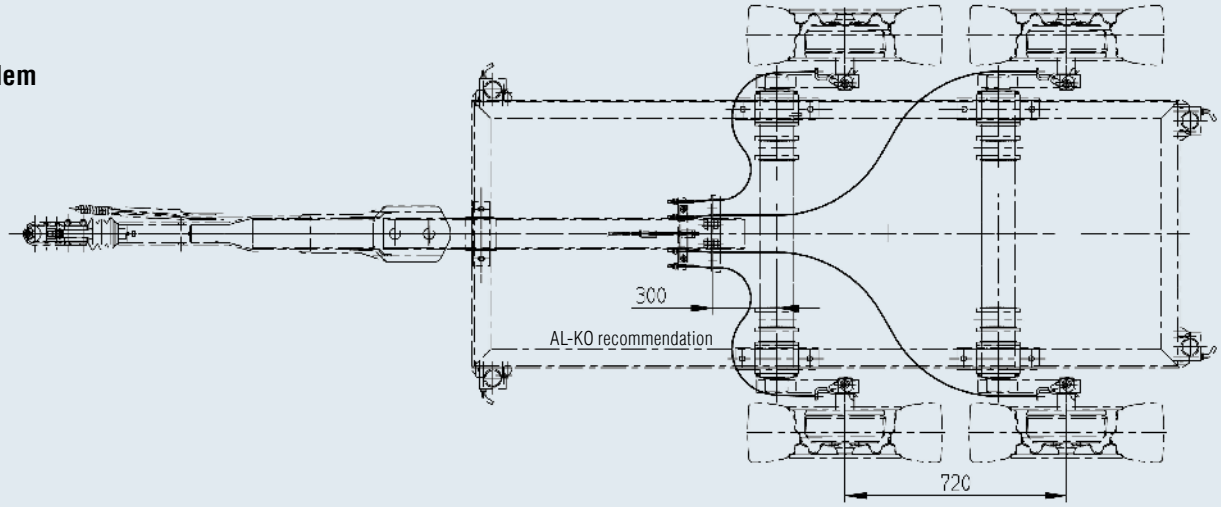

Bowden cable allocation: Longlife with hook-in eye

for single-axle trailers

System from / to (mm)	Wheel brake 2051/2361 Part no. Bowden cable	Sleeve (mm)	Cable (mm)	Wheel brake 3062/3081 Part no. Bowden cable	Sleeve (mm)	Cable (mm)
Up to 1,650	247 285	1,020	1,216	278 196 04 03	1,040	1,300
1,650 – 2,050	247 287	1,320	1,516	278 196 04 05	1,340	1,600
2,050 – 2,450	247 288	1,430	1,626	224 609	1,760	2,020

for tandem-axle trailers

System from / to (mm)	Wheel brake 2051/2361 Front axle Part no. Bowden cable	Sleeve (mm)	Cable (mm)	Rear axle -ax Bowden cable	Sleeve (mm)	Cable (mm)
Up to 1,650	247 285	1,020	1,216	247 289	1,620	1,816
1,650 – 2,050	247 287	1,320	1,516	247 290	1,790	1,986
2,050 – 2,450	247 288	1,430	1,626	1 224 570	2,170	2,366

- Bowden cables are supplied with the axles.
- Avoid excessively tight bends or kinks when routing Bowden cables!
- Appropriately large radii must be maintained!
- The Bowden cables must be mounted or guided so as to avoid chafing on the Bowden cables.

LOWERING AXLES

Mounting Recovery device

Recovery device
Part no. 288 675 up to 2500 kg (M10)
Part no. 288 676 above 2500 kg (M12)

The recovery device is supplied with the axles.

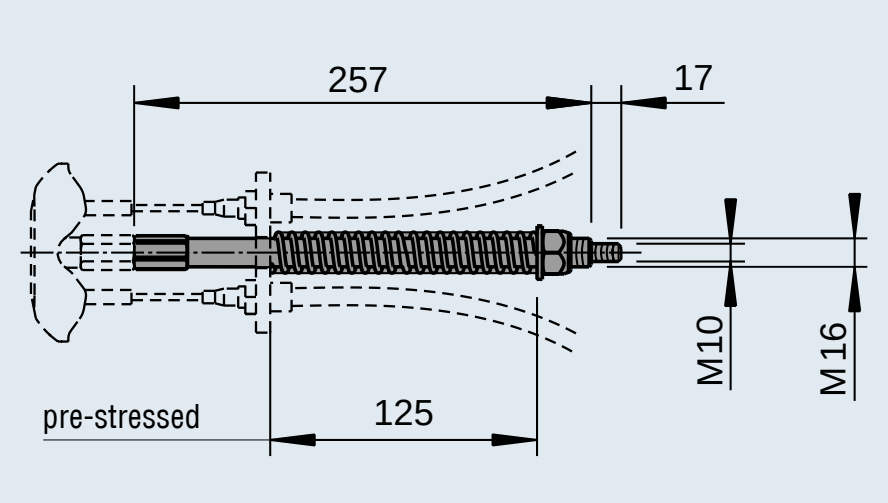

SAFETY AND MAINTENANCE

Safety instructions:

- Affix a warning notice on all sides of the trailer.
  For example:
  "Important: This trailer lowers!"
- Work on the hydraulic system is only permitted when the trailer is lowered or the frame has been supported (risk of accidents due to lowering)
- The valve lever on the pump must be in the middle position when driving (risk of lowering)
- The hand lever on the pump is not allowed to be connected to the pump when driving (danger of misuse)

Maintenance notes:

- It is recommended for the body to be lowered after driving, because this allows the scrapers to clean the piston rods of the cylinders by removing salt, dust and moisture
- Apply grease to the grease nipple on the axle brackets at least once a year
- Apply grease to the grease nipple on the hydraulic cylinders at least once a year
- Apply grease to the grease nipple on the bowden cable deflection on the swing arm at least twice a year

Hydraulics
The hydraulic components are supplied by a third party company. Ordering, delivery and payment is handled by the hydraulic suppliers directly.

The information on the following pages is intended to help you select the most suitable system for your application.

If you have further questions about the hydraulic system, the specific supplier will be able to provide the additional support.

LOWERING AXLES

Hydraulic pumps

Variants/weight ranges

The hydraulic components are <u>not</u> supplied by AL-KO.

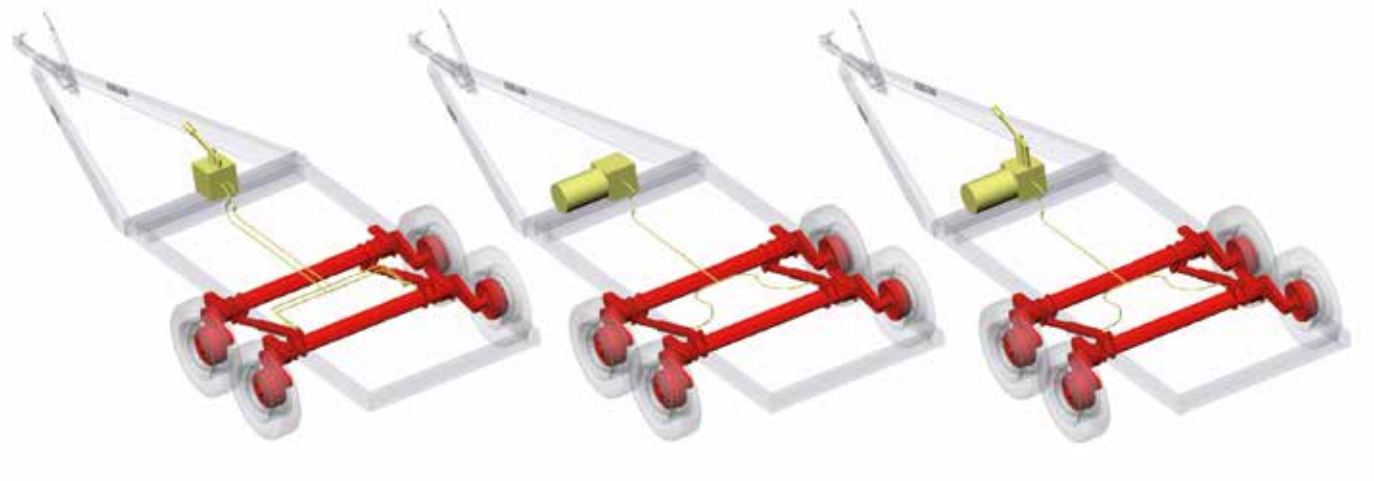

VARIANT 1

Mechanical hydraulic pump

Single axles	1350/1500/1600/1800/ 2500/3000/3500 kg
Tandem	2000/2700/3000/3500 kg

VARIANT 2

Electrical hydraulic pump <u>without</u> emergency operation

Single axles	1350/1500/1600/1800/ 2000/2500/3000/3500 kg
Tandem	2000/2700/3000/3500 kg

VARIANT 3

Electrical hydraulic pump <u>with</u> emergency operation

Single axles	1350/1500/1600/1800/2000/ 2500/3000/3500 kg
Tandem	2000/2700/3000/3500 kg

SCOPE OF DELIVERY

AL-KO (highlighted in red)
Axles with loose hydraulic cylinder

Hydraulic supplier (highlighted in yellow)
Pump unit with hoses and valves.



Lowered position Driving position



Driving position

HYDRAULIC COMPONENT SET

Hand pump



Hydraulic components are <u>not</u> supplied by AL-KO.

Hydraulic components with parts list

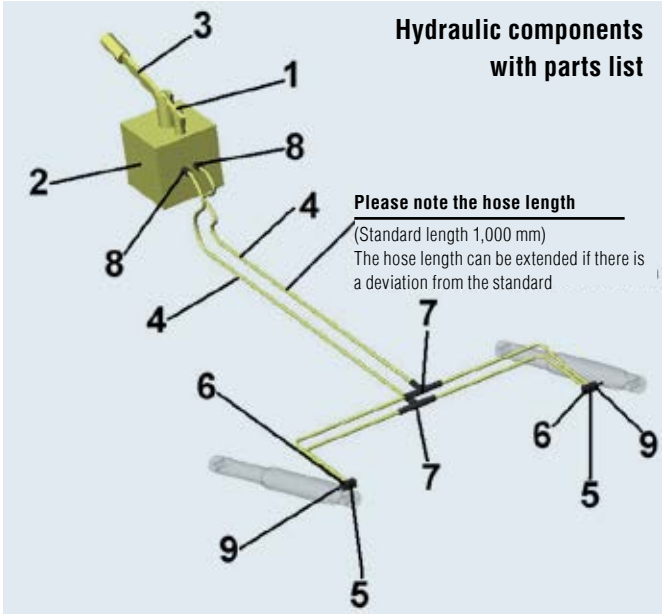

Please note the hose length

(Standard length 1,000 mm)
The hose length can be extended if there is a deviation from the standard

Hydraulic diagram

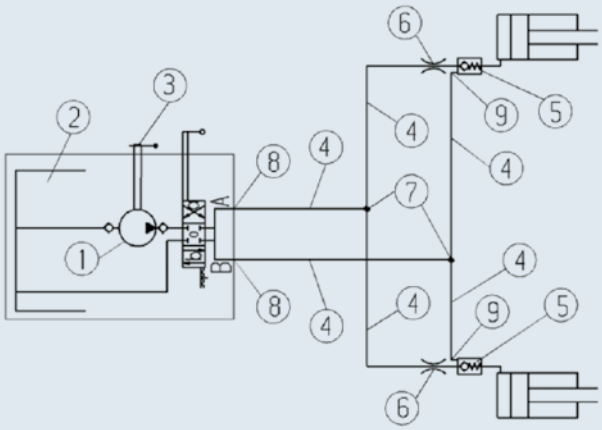

Item	Units	Designation	Stiefel no.	AL-KO no.
	1	Complete set with all items listed below	100 187 528	1 222 213
1	1	Double-action hand pump		
2	1	2 l tank		
3	1	Hand lever		
4	6	HP hose 1000lg.DKOL 12/DKOL 1290 size		
5	2	unlockable Check valve		
6	2	Straight screw-in L 12/ 3/8" with orifice		
7	2	T piece 12 L		
8	2	Straight screw-in L 12/ 3/8"		
9	2	Straight screw-in L 12/ 1/4"		

ONLY AVAILABLE IN GERMANY

HYDRAULIC COMPONENT SET

Electrical unit without emergency hand pump



The hydraulic components are <u>not</u> supplied by AL-KO.

Hydraulic components with parts list

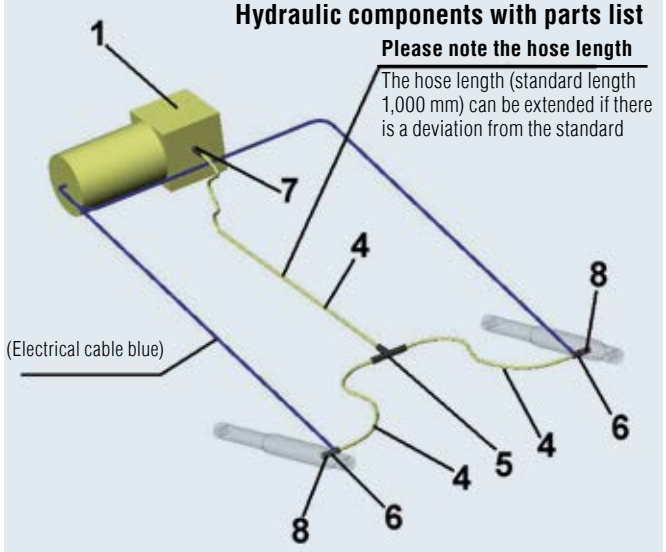

Please note the hose length

The hose length (standard length 1,000 mm) can be extended if there is a deviation from the standard

Items 2 and 3 not shown in the drawing

Hydraulic diagram

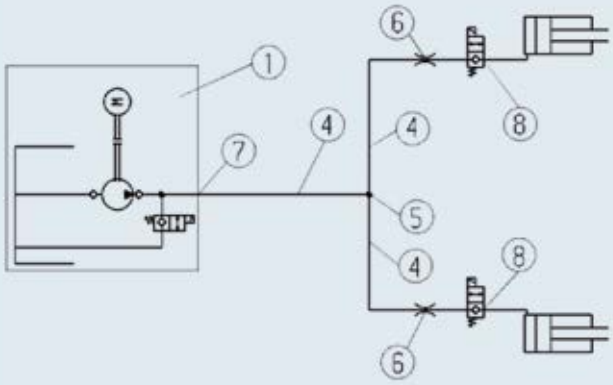

Items 2 and 3 not shown in the drawing

Item	Units	Designation	Stiefel no.	AL-KO no.
	1	Complete set with all items listed below	100 187 675	1 222 214
1	1	DC unit 12VDC with 2/2-way poppet valve		
2	1	Cable set with 7-pin plug		
3	1	Switch box		
4	3	HP hose 1000lg.DKOL 12/DKOL 1290 size		
5	1	T piece 12 L		
6	2	Straight screw-in L 12/ 3/8" with orifice		
7	1	Straight screw-in L 12/ 1/4"		
8	2	2/2-way poppet valve with banjo bolt		

ONLY AVAILABLE IN GERMANY

HYDRAULIC COMPONENT SET

Electrical unit with emergency hand pump (not illustrated)

Important notes about the emergency hand pump!

The emergency hand pump can only be used for lifting the trailer (not lowering) if the electrical unit has failed.

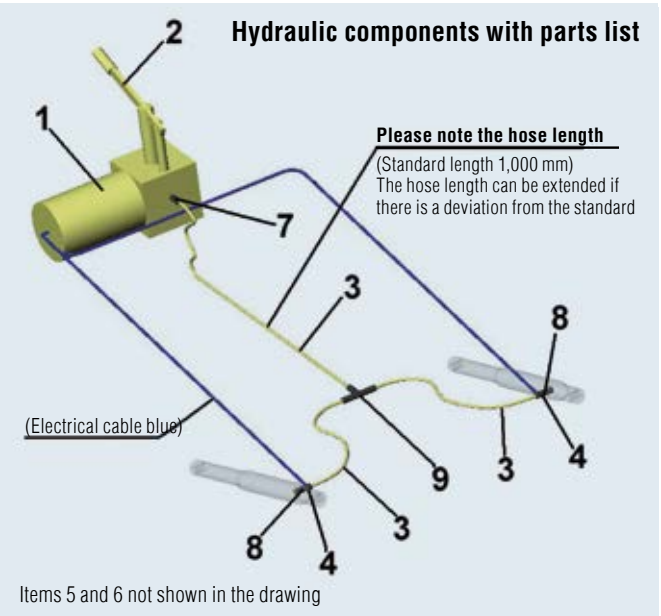

Items 5 and 6 not shown in the drawing

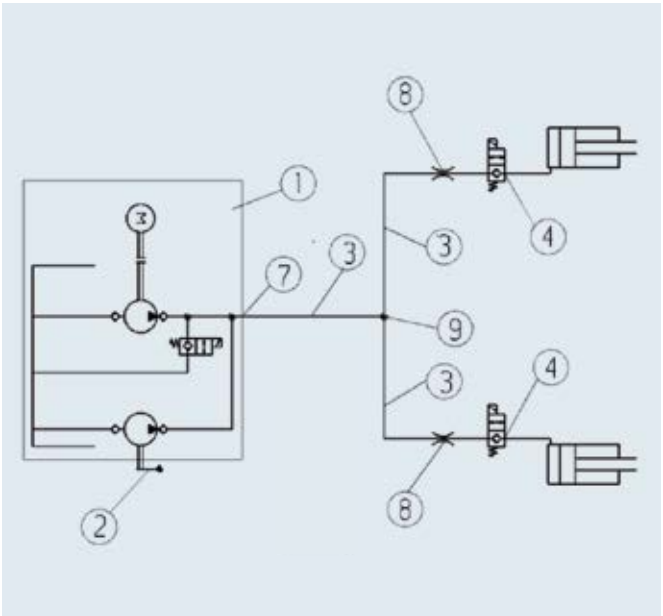

Item	Units	Designation	Stiefel no.	AL-KO no.
	1	Complete set with all items listed below	100 219 872	1 222 318
1	1	Emergency unit		
2	1	Hand lever		
3	3	Hose		
4	2	2/2-way poppet valve with banjo bolt		
5	1	Switch box		
6	1	Socket		
7	1	Straight screw-in L 12/ 1/4"		
8	2	Straight screw-in L 12/ 3/8" with orifice		
9	1	T-piece		

ONLY AVAILABLE IN GERMANY

CHASSIS WITH HEIGHT-ADJUSTABLE DRAWBAR

for trailers with pneumatic brakes

YOUR ADVANTAGE

180 kg more payload
In comparison to straight axles with leaf suspension, you save up to 180 kg of net weight at a total carrying weight of 5 tons.
That means more payload for your customers.

Height-adjustable drawbar
If you have different towing vehicles in your fleet with different hitch heights, No problem. The AL-KO drawbars are height adjustable.

No weight compensation required up to 6500 kg
When using the combination of AL-KO height-adjustable drawbar with AL-KO tandem axles, no weight compensation is required (TÜV report can be requested if required).

Robust
- High articulation stability in the toothed washers due to doubling of teeth.
- Robust box section.



Application examples





Standard
- Automatic adjustment of the brake pads (Directive 71/320/EEC dated 01/10/1994).
- Manoeuvring handle welded onto intermediate piece.
- Holder for blank coupling welded onto intermediate piece.
- Exchangeable hitch components (DIN eye/NATO eye).

ALB preparation
AL-KO axles are prepared for fitting an automatic anti-lock brake (ALB).
For this purpose, the brake drum is provided with a sensor wheel spline profile, and the brake back plate with a pressed-in bush.

In tandem axles, only the rear axle is used for controlling the ALB, i.e. the holes for the sensor are only in place on the rear axle in the brake backing plate for this reason. The sensors are not supplied by AL-KO (Wabco / Knorr / Haldex, etc.).

TECHNICAL NOTES: TRAILER WITH PNEUMATIC BRAKES

Rubber suspension axles

TECHNOLOGY

Assembly of brake cylinders for axles with rubber suspension

Single axle trailer	1,800 kg wheel brake 2361 AR
Tandem axle trailer	3,500 kg wheel brake 2361 AR
Tri-axle trailer	4,300 kg wheel brake 2361 AR
Tri-axle trailer	5,400 kg wheel brake 2361 AR

View from front

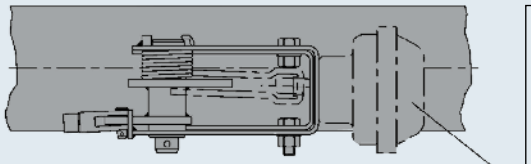

Diaphragm brake cylinder type:
9 is not a part supplied by AL-KO and must be ordered from WABCO, Knorr or Haldex

View from top

Standard brake lever (included in the scope of delivery)
for standard tyre (R dyn. 314 mm or larger),
e.g. tyre 185 R 14 C

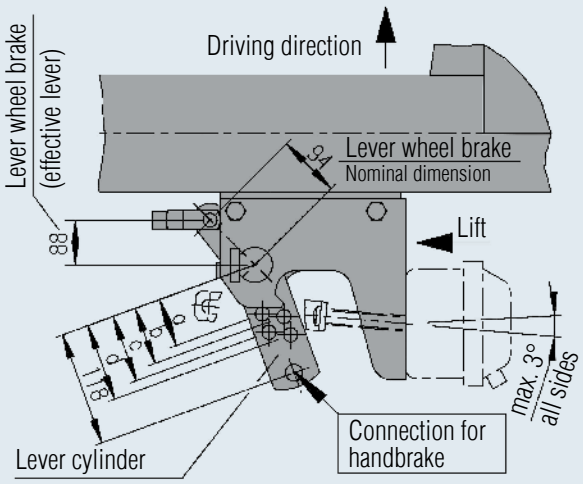

Special brake lever (must be ordered separately)
for very small tyres (R dyn. 240 mm to R dyn. 260 mm),
e.g. tyres 195/50 R 13 C

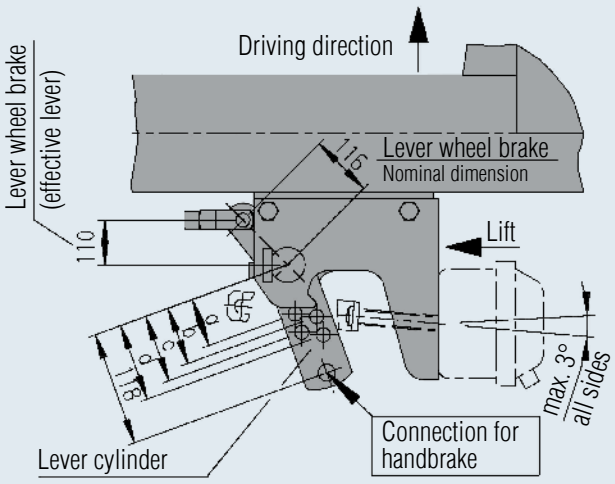

Standard brake lever

		Lever cylinder	Lever wheel brake Nominal dimension	Lever wheel brake eff. Lever (for brake calc.)
Single axle trailer	GA 1,800 kg	a = 50 mm	94 mm	88 mm
Tandem axle	GA 3,500 kg	a = 50 mm	94 mm	88 mm
Tri axle	GA 4,300 kg	a = 50 mm	94 mm	88 mm
Tri axle	GA 5,400 kg	a = 50 mm	94 mm	88 mm

Special brake lever

		Lever cylinder	Lever wheel brake Nominal dimension	Lever wheel brake eff. Lever (for brake calc.)
Single axle trailer	GA 1,800 kg	a = 50 mm	116 mm	110 mm
Tandem axle	GA 3,500 kg	a = 50 mm	116 mm	110 mm
Tri axle	GA 4,300 kg	a = 50 mm	116 mm	110 mm
Tri axle	GA 5,400 kg	a = 50 mm	116 mm	110 mm

TECHNICAL NOTES: TRAILER WITH PNEUMATIC BRAKES

Rubber suspension axles and steel spring axles

TECHNOLOGY

Mounting brake cylinder for axles with rubber suspension

Single axle trailer	3,000 kg wheel brake 3062 AR
Single axle trailer	4,000 kg wheel brake 3081 AR/B
Tandem	5,000 kg wheel brake 3062 AR
Tandem	6,000 kg wheel brake 3062 AR
Tandem	7,500 kg wheel brake 3081 AR/B

View from front

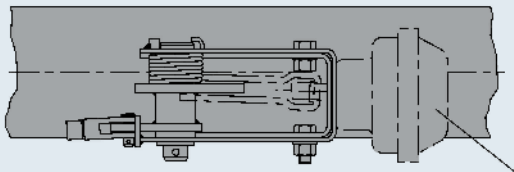

Diaphragm brake cylinder type: 9 is not a part supplied by AL-KO and must be ordered from WABCO, Knorr or Haldex

View from top

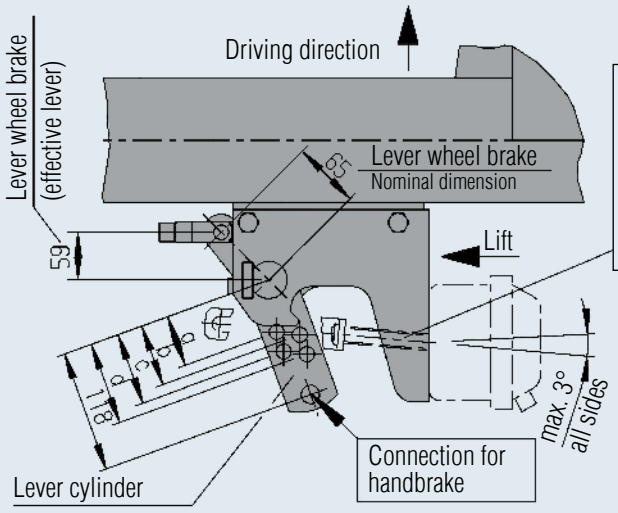

Pushrod of diaphragm cylinder must be shortened to dimension 95-110 mm by the vehicle builder – depending on which hole the fork head is attached to!

		Lever cylinder	Lever wheel brake Nominal dimension	Lever wheel brake eff. Lever (for brake calc.)
Single axle trailer	GA 3000 kg - axle type BL 3000 rubber suspension	c = 70 mm	65 mm	59 mm
Single axle trailer	GA 4000 kg - axle type BT 4000 steel suspension	d = 80 mm	65 mm	59 mm
Tandem axle	GA 5000 kg - axle type BL 2700 rubber suspension	a = 50 mm	65 mm	59 mm
Tandem axle	GA 6500 kg - axle type BL 3000 rubber suspension	b = 60 mm	65 mm	59 mm
Tandem axle	GA 7500 kg - axle type BT 4000 steel suspension	c = 70 mm	65 mm	59 mm

TECHNICAL NOTES: TRAILER WITH PNEUMATIC BRAKES

Rubber suspension axles and steel spring axles

TECHNOLOGY

- AL-KO axles have a toe-in, which means they must be installed trailing.
- According to ECE-R13 Directive, the brake system of trailers with more than 3.5 t permitted gross weight must be equipped with an automatic anti-lock brake (ALB)!
- AL-KO axles above (GA) 3.5 t are prepared for installation of ALB.
- In tandem or tri-axles, only the rear axle is prepared for installation of the sensors on the brake backing plate for controlling the automatic anti-lock brake (ALB).
- The sensors are not supplied. Suppliers: WABCO, Knorr, Haldex.

The following information is required for the brake calculation:

- Permitted gross weight of the trailer
- Intended nose load on the coupling point
- Unladen weight of the trailer
- Single axle trailer, tandem, tridem or semi-trailer
- Wheel brake AL-KO 2361AR or wheel brake AL-KO 3062AR or wheel brake AL-KO 3081AR vers. A or vers. B
- Diaphragm cylinder: Type 9
  WABCO no. 423 102 900 0
  Knorr no. K010241
  Haldex no. 120 311 101
- Specify brake lever ratio
- Copies of wheel brake ECE test report (provided by AL-KO on request)

WABCO
Sensor part no.: 441 032 905 0
Clamping bush part no.: 899 759 815 4

KNORR
Sensor part no.: 0 486 001 032 100
Clamping bush part no.: ⌶16774

HALDEX
Sensor part no.: 364 208 001
Clamping bush part no.: 059 5123 09

- Please request the brake calculation from Wabco, Knorr or Haldex (manufacturers of the pneumatic system).

Brake diagram recommendation

WABCO

Single axle trailer no.:	841 601 101 0
Tandem no.:	841 601 174 0
Tri-axle no.:	841 601 251 0

KNORR

Single axle trailer no.:	BC1A2P-AGK
Tandem no.:	BC2A2P-AGK
Tri-axle no.:	BC3A2P-AGK

HALDEX

Single axle trailer no.:	380 098 190
Tandem no.:	380 095 320
Tri-axle no.:	380 095 330

Deflection diagrams (for setting the ALB controller)

Rubber suspension axle AL-KO BL 1900-9

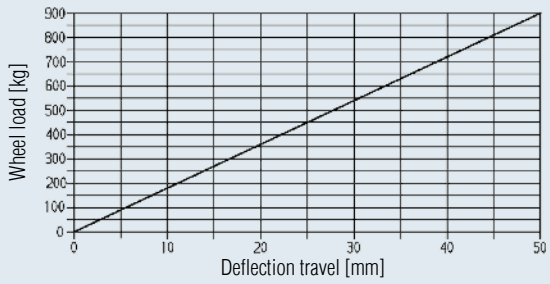

Rubber suspension axle AL-KO BL 3000-2

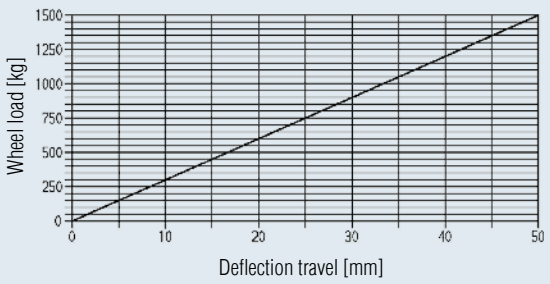

Rubber suspension axle AL-KO BL 2700-2

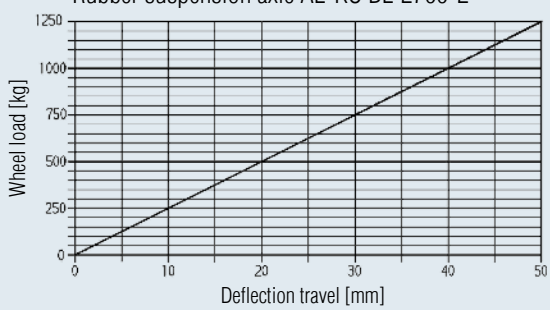

Steel spring axle AL-KO BT 4000

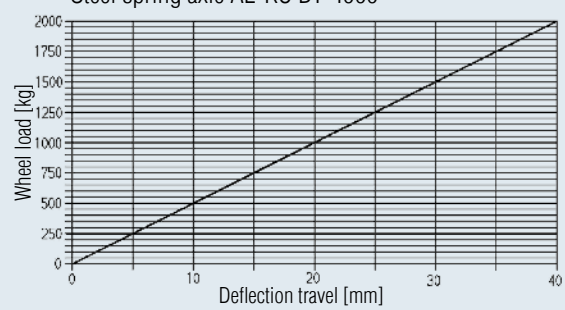

INSTALLATION SUGGESTIONS

for trailers with pneumatic brakes

Installation suggestion up to GA 1.8 t (with single axle with rubber suspension max. axle load 1.8 t)

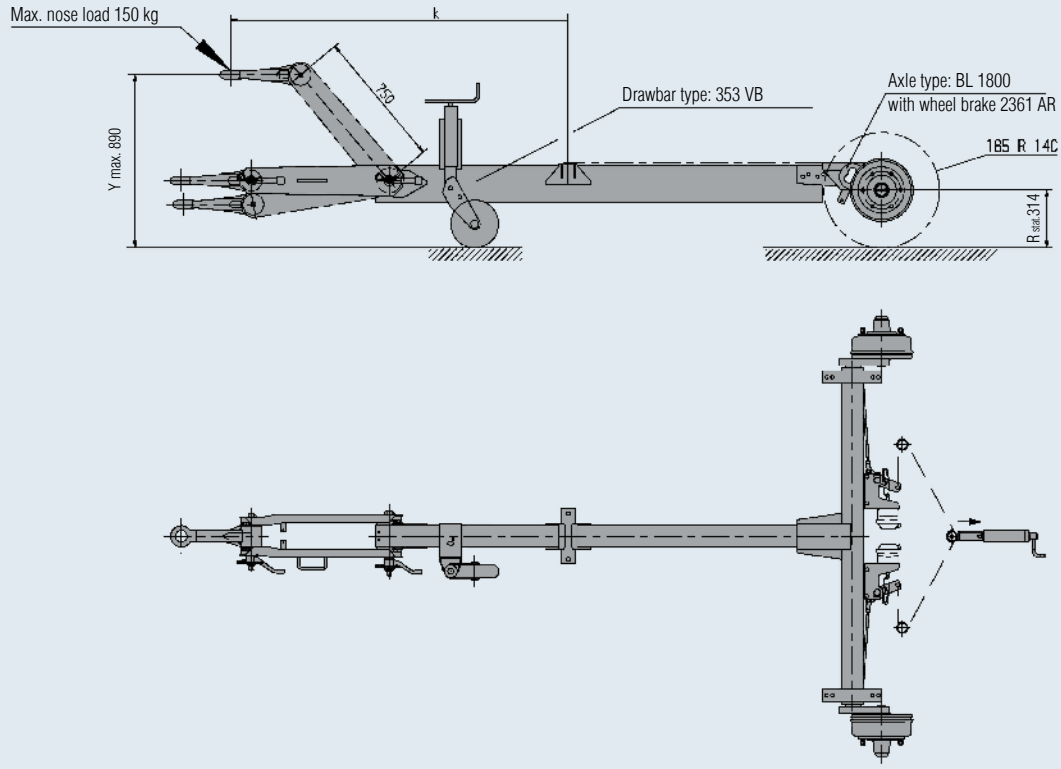

Installation suggestion up to GA 3.5 t (with tandem axle with rubber suspension max. axle load 3.5 t)

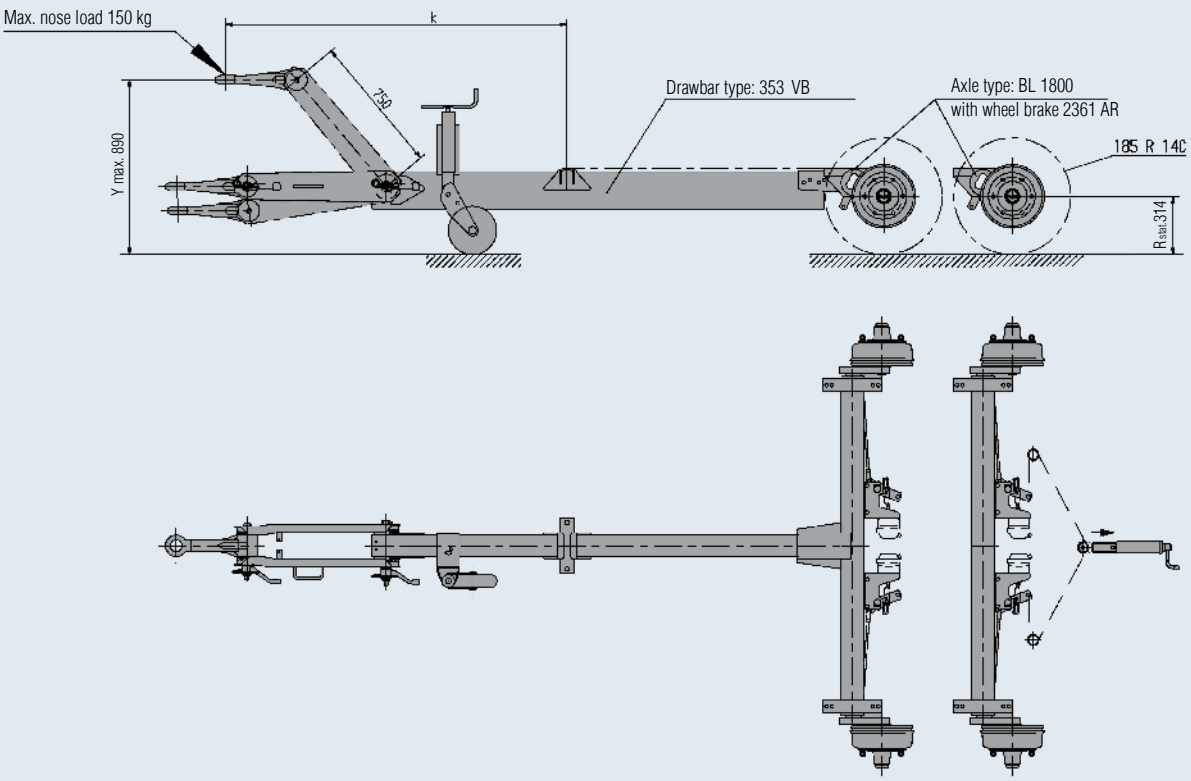

INSTALLATION PROCESSES

for trailers with pneumatic brakes

Installation suggestion up to GA 4.8 t (with tridem axles with rubber suspension axle max. axle load 4.3 t)

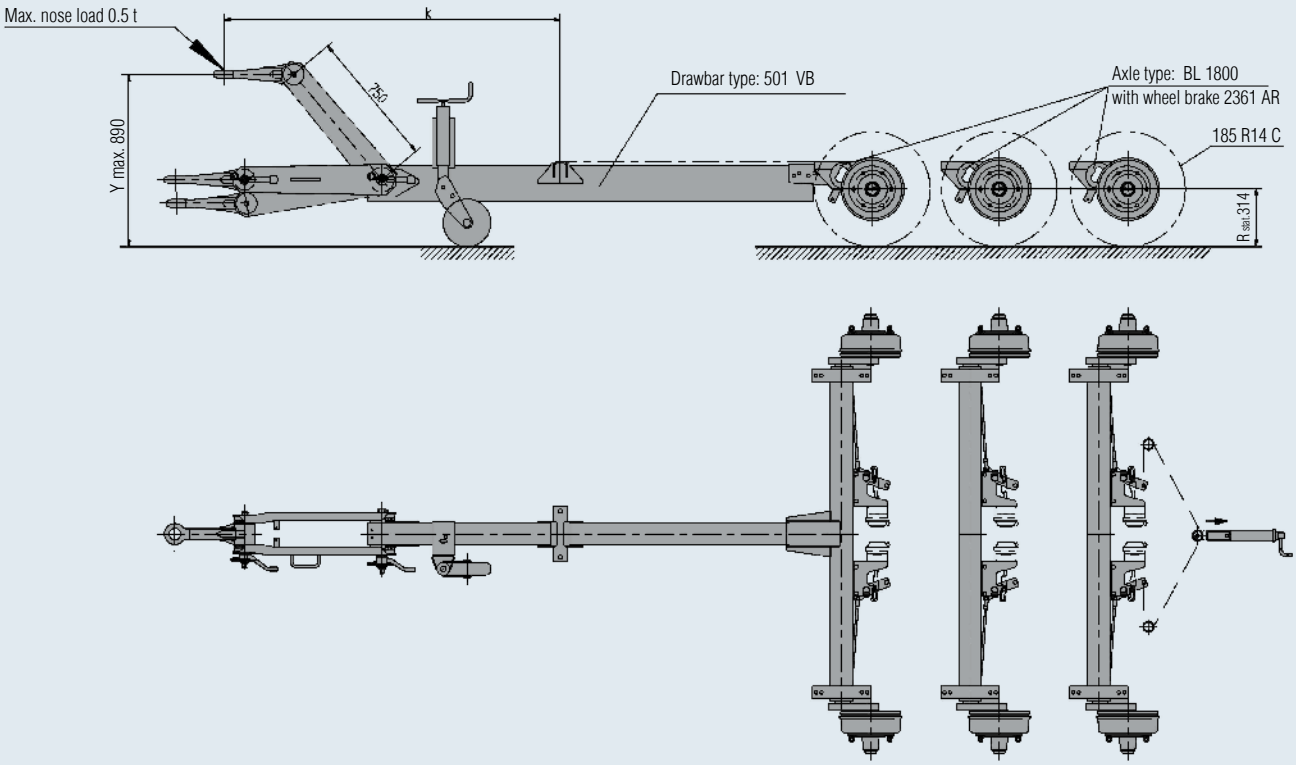

Installation suggestion up to GA 6.0 t (with tridem axles with rubber suspension axle max. axle load 5.4 t)

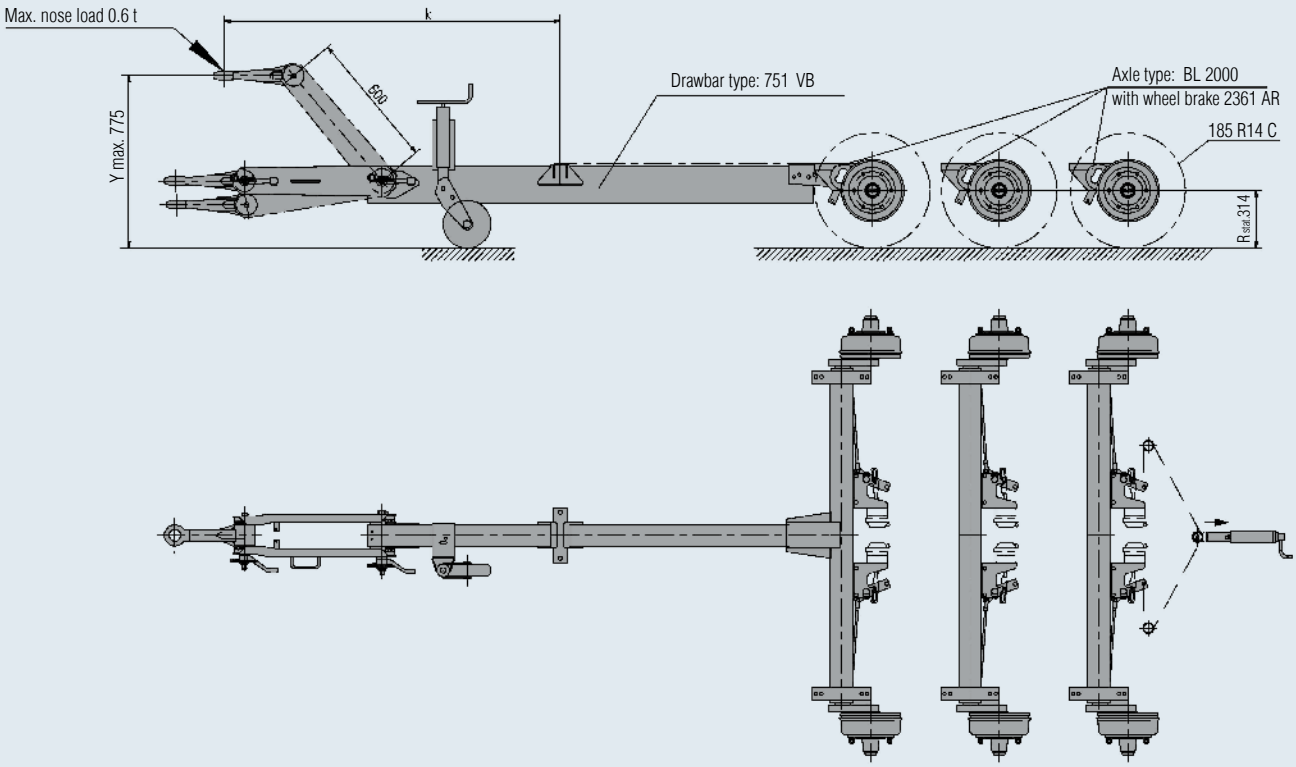

INSTALLATION PROCESSES

for trailers with pneumatic brakes

Installation suggestion up to GA 4.5 t (with single axle with steel spring axle max. axle load 4.0 t)

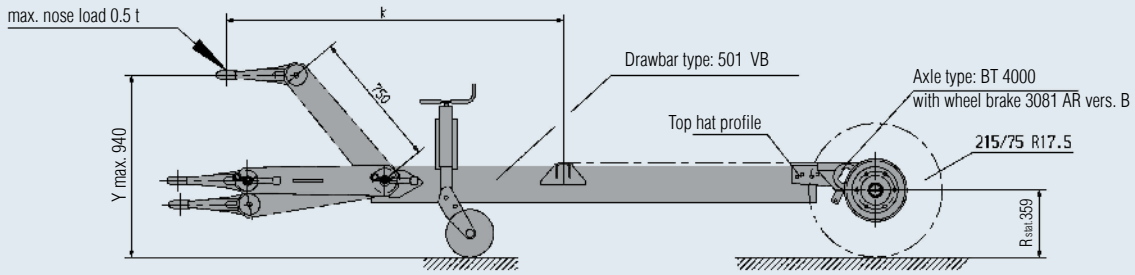

If the drawbar is bolted directly onto axles above GA 5.0 t by means of a top hat profile, we recommend:

a) Welding additional cross members into the frame as reinforcement and

b) Additionally bolting these onto the drawbar!

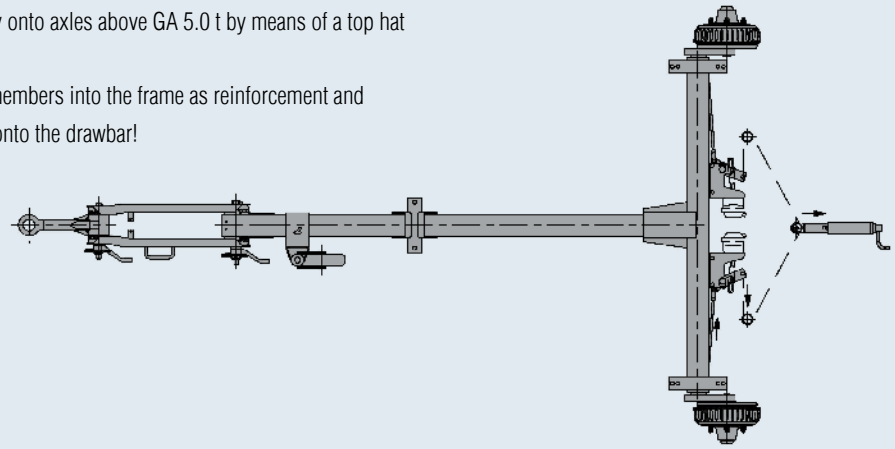

Installation suggestion up to GA 5.0 t / GA 6.5 t (with tandem with rubber suspension max. axle load 5.0 t or 6.0 t)

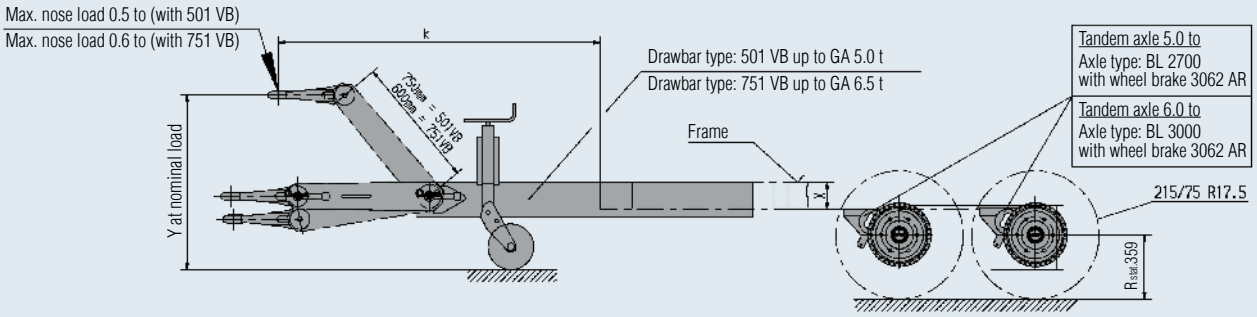

Y = 940 mm (501 VB)

Attachment of the drawbar directly to the axle by means of a top hat profile *(see figure above)*

Y = 825 mm (751 VB)

Attachment of the drawbar directly to the axle by means of a top hat profile *(see figure above)*

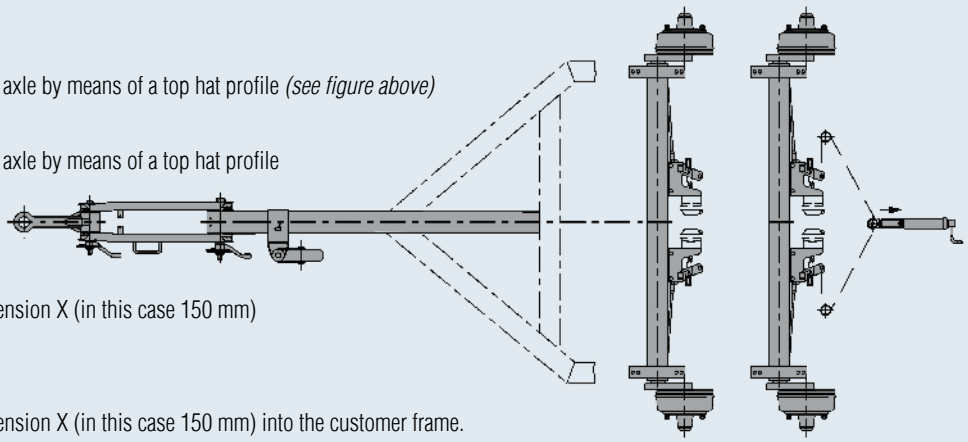

Y = 1090 mm (501 VB)

If the drawbar is moved upwards by dimension X (in this case 150 mm) into the customer frame.

Y = 875 mm (751 VB)

If the drawbar is moved upwards by dimension X (in this case 150 mm) into the customer frame.

TYRES AND RIMS

for trailers with pneumatic brakes

Permitted gross weight of the trailer (tyre table for permitted maximum speed 80 km/h)	AL-KO axle type B = rubber suspension axle with mechanical brakes BL = rubber suspension axle with pneumatic brakes BRA = lowering rubber suspension axle down to 210 mm ASB = lowering rubber suspension axle down to 270 mm BT = steel spring axle (lowering or with pneumatic brakes)	Recommended tyres Tyre size	R stat. mm	R dyn. mm	PR*	Load capacity kg	 bar	Recommended rims Size	 Wheel connection
Single axle up to max. 1800 kg	B 1800 / BRA 1800 / ASB 1800 / BL 1800	185 R 14 C 195 R 14 C	300 302	320 321	8 8	900 900	4.5	5.5J x 14 6.5J x 14	112 x 5 112 x 5
Single axle up to max. 2,500 kg	B 2500 / BRA 2500 / BL 2700	215 R 14 C (Bridgest) 7.00 R 16 C	310 361	331 377	8 12	1250 1285	 6.00	6J x 14 6.00G-16	205 x 6 205 x 6
Single axle up to max. 3,000 kg	BRA 3000 / BL 3000	7.50 R 16 C 225 / 75 R 16 C 215 / 75 R 17.5	371 338 359	389 358 371	12	1500 1575 1600	6.75 6.75 7.00	6.00G-16 6J x 16H2 17.5 x 4.00	205 x 6 205 x 6 205 x 6
Single axle up to max. 3,500 kg	BT 3500 (lowering)	235 / 75 R 17.5	363	387		2 725	9.00	17.5 x 6.75	205 x 6
Single axle up to max. 4,000 kg	BT 4000 (with pneumatic brakes)	235 / 75 R 17.5	363	387		2725	9.00	17.5 x 6.75	205 x 6
Tandem axle up to max. 3,500 kg	2 x BRA 1800 / 2 x BL 1800	185 R 14 C 195 R 14 C	300 320	320 321	8 8	900 900	4.50	5.5J x 14 5.5J x 14	112 x 5 112 x 5
Tandem axle up to max. 5,000 kg	2 x BL 2700	215 R 14 C (Bridgest) 7.00 R 16 C	310 361	331 377	8 12	1250 1285	 6.0	6J x 14 6.00G-16	205 x 6 205 x 6
Tandem axle up to max. 6,500 kg	2 x BL 3000	7.50 R 16 225 / 75 R 16 215 / 75 R 17.5	371 338 371	389 358 371	12	1500 1575 1600	6.75 6.75 7.00	6.00G-16 6J x 16H2 17.5 x 6.00	205 x 6 205 x 6 205 x 6
Tandem axle up to max. 7,500 kg	2 x BT 4000 (with pneumatic brakes)	235 / 75 R 17.5	363	387		2725	9.00	17.5 x 6.75	205 x 6
Tri-axle up to max. 4,300 kg	3 x BL 1800	195 / 50 R 13 C 185 R 14 C	240 300	255 320	8 8	900 900	6.25 4.50	5.5J x 13 5.5J x 14	112 x 5 112 x 5
Tri-axle up to max. 5,400 kg	3 x BL 2000	195 / 50 R 13 C 185 R 14 C	240 300	255 320	8 8	900 900	6.25 4.50	5.5J x 13 5.5J x 14	112 x 5 112 x 5

* = Ply rating = number of layers in carcass

All tyre and rim information is subject to correction. Contact the dealer or manufacturer to confirm the load rating of tyres and rims.

The tyres and rims specified in the table are only excerpts from tyre and rim handbooks. If you have further detailed questions about tyres and rims, please contact your tyre and rim dealer or your tyre and rim manufacturer.

The vehicle manufacturer must coordinate the tyres and rims with the axle. AL-KO's warranty does not apply. Tyres and rims are not included in the AL-KO delivery range.

TYRES

for trailers up to 3.5 to – car as towing vehicle

For trailer and caravan towed by car – permitted maximum speed 100 km/h

Car tyres with belt construction				
Tyre designation	Normal version		Radius	
	Max. tyre load capacity kg	Air pressure bar	R stat. mm	R dyn. mm
135 R 12	320	2.4	238	253
145 R 12	400	2.5	246	263
155 R 12	455	2.5	249	267
145 R 13	425	2.5	256	275
155 R 13	480	2.5	263	281
165 R 13	525	2.5	270	290
175 R 13	585	2.5	275	295
175/70 R 13	525	2.7	264	282
185/70 R 13	585	2.7	271	290
195/70 R 13	660	2.7	275	295
175/70 R 14	550	2.7	277	294
185/70 R 14	615	2.7	284	303
195/70 R 14	675	2.7	289	309
205/70 R 14	760	2.7	295	317
215/70 R 14	805	2.7	300	323
165 R 14	550	2.5	283	302
175 R 14	615	2.5	288	308
185 R 14	660	2.5	294	316
195 R 14	715	2.5	300	323
205 R 14	780	2.5	308	333
175/65 R 14	525	2.7	268	283
185/65 R 14	585	2.7	273	290
195/65 R 14	660	2.7	278	296
195/65 R 15	675	2.7	291	308
205/65 R 15	735	2.7	296	314
175 R 14C	815	4.5	289	306
185 R 14C	895	4.5	296	314
195 R 14C	1,000	4.5	302	321
205 R 14C	1,080	4.5	310	331
215 R 14 C	1,250	4.5	316	337

The data specified in the table is taken from tyre handbooks.
For other details, please refer to the tyre handbooks or contact your tyre dealer/tyre manufacturer.
Please note: Tyres and rims are not included in the AL-KO delivery range.

INSTALLATION AND SETTING INSTRUCTIONS

on the AL-KO automatic reverse mechanical brake system

Version without spring accumulator

Type RB 1637, RB 2051, RB 2361

1. Mount overrun device and axle on chassis.
2. Release handbrake lever completely.
3. Pull out the overrun device's drawbar tube fully towards the front.
4. Screw brake rod (2) at least 15 mm into the articulated head (1) of the overrun device and lock with hex nut (3).
5. Hook the Bowden cable into the wheel brake.
6. Connect Bowden cables (5) with adapter bracket (8) and lock with hex nut M12x1.5 (9).
7. Pass Bowden cables (8) into the compensation profile (7).
8. Insert brake rod (2) into compensation profile (4).
9. Put on the spacer (11).
10. Secure adapter bracket.
    For brake rod M10
    Screw long nut (6) onto brake rod (2) and tighten by hand.
    For brake rod M8
    Put washer (12) on brake rod (2).
    Screw nut (13) onto brake rod (2) and tighten by hand.
11. Firmly apply and release the handbrake lever 3 times.
12. Turn the wheel forwards, tightening the long nut (6) or nut (13) until brake resistance can be felt.
    The wheel needs to be turnable by hand in the driving direction.
13. Lock long nut (6) or nut (13) with hex nut (7) or alternatively use brake rod holder (10).

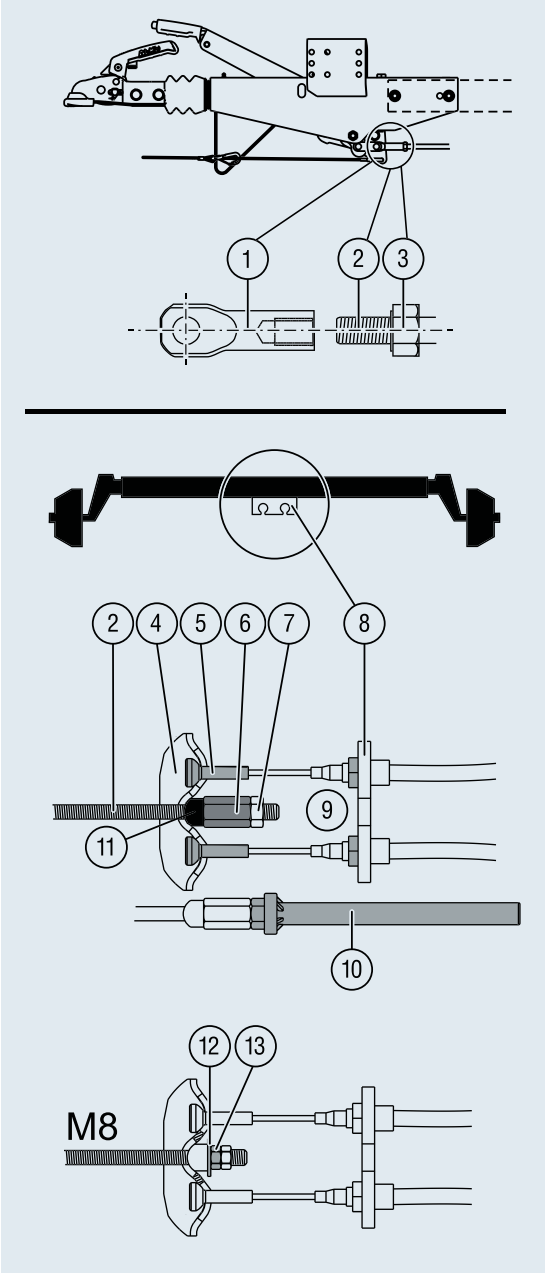

Tightening torques	
M 8	12 Nm
M 10	20 – 25 Nm
M 12	40 – 45 Nm

AL-KO brake rod holder	
Brake rod	Part no.
M 10	228827

Version with spring accumulator

Type RB 3062, RB 3081

1. Mount overrun device and axle on chassis.
2. Release handbrake lever completely.
3. Pull out the overrun device's drawbar tube fully towards the front.
4. Push handbrake bar (4) and spring cylinder (5) onto brake rod (2).
5. Screw hexagon nuts (3; 6) onto brake rod.
6. Screw brake rod (2) at least 15 mm into the fork head (1) of the overrun device and lock with hex nut (3).
7. Pull brake rod backwards until relay lever makes contact.
8. Turn hexagon nut (6) up to 1 mm against the spring cylinder. and lock with a second hexagon nut.
9. Hook the Bowden cable into the wheel brake.
10. Connect Bowden cables (8) with adapter bracket (9) and lock with hex nut M16x1.5 (10).
11. Connect brake rod (2) with compensation profile (7).
12. Pass Bowden cables (8) into the compensation profile (7).
13. Screw on ball nut M10 (14) and tighten. Lock with hex nut M10 (15).
14. Connect the spacer (16).
15. Screw long nut (6) onto brake rod (2) and tighten by hand.
16. Firmly apply and release the handbrake lever 3 times.
17. Turn the wheel forwards, tightening the long nut (13) until brake resistance can be felt. The wheel needs to be turnable by hand in driving direction.
18. Lock long nut (13) with hex nut (12) or alternatively use brake rod holder (11).

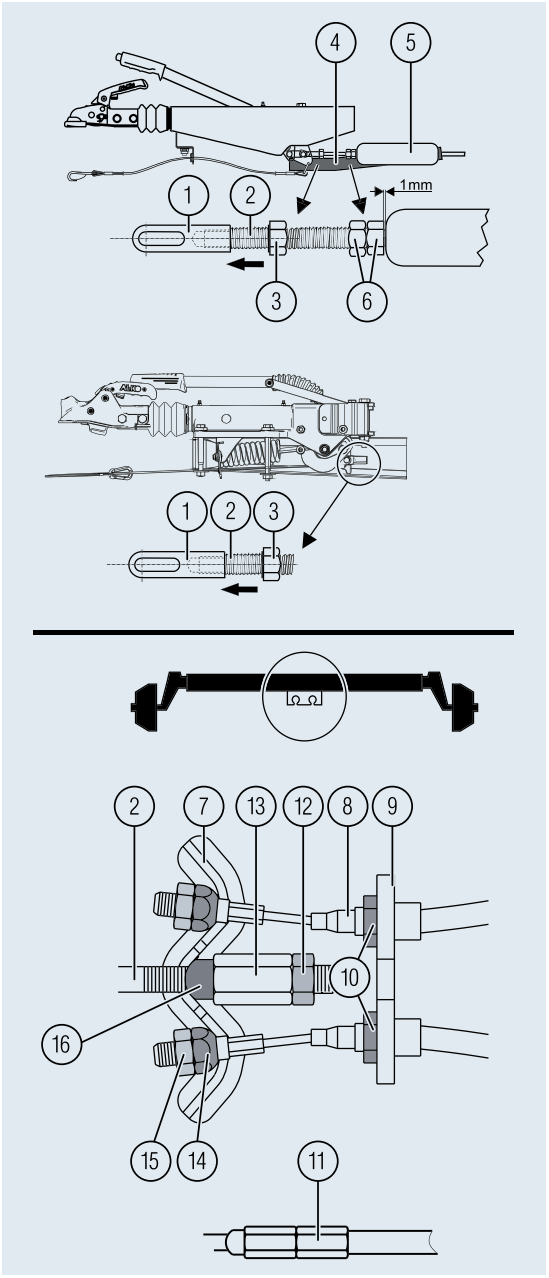

Tightening torques	
M 10	20 – 25 Nm
M 12	40 – 45 Nm
M 16	90 – 100 Nm

AL-KO brake rod holder	
Brake rod	Part no.
M 12	28867601

INSTALLATION AND SETTING INSTRUCTIONS

on the mechanical brake system AL-KO automatic reverse

Version without spring accumulator incl. height-adjustable version

Type RB 1637, RB 2051, RB 2361

1. Mount height-adjustable overrun device with drawbar and axle on chassis.
2. Raise drawbar to the highest setting.
3. Release handbrake lever completely (A).
4. Pull out the overrun device's drawbar tube fully towards the front.
5. Screw brake rod (2) at least 15 mm into the articulated head (1) of the overrun device and lock with hex nut (3).
6. Pull brake rod backwards until relay lever makes contact.
   – The Bowden cable needs to be tight.
   – The relay lever in the overrun device needs to lie against the drawbar tube.
7. Inserting the Bowden cable into the wheel brake
8. Connect Bowden cables (5) with adapter bracket (8) and lock with hex nut M12x1.5 (9).
9. Pass Bowden cables (5) into the compensation profile (4).
10. Insert brake rod (2) into compensation profile (4).
11. Connect the spacer (11).
12. Secure adapter bracket.
13. Screw long nut (6) onto brake rod (2) and tighten by hand.
14. Firmly apply and release the handbrake lever 3 times.
15. Turn the wheel forwards, tightening the long nut (6) until brake resistance can be felt.
    The wheel needs to be turnable by hand in driving direction.
16. Lock long nut (6) with hex nut (7) or alternatively use brake rod holder (10).

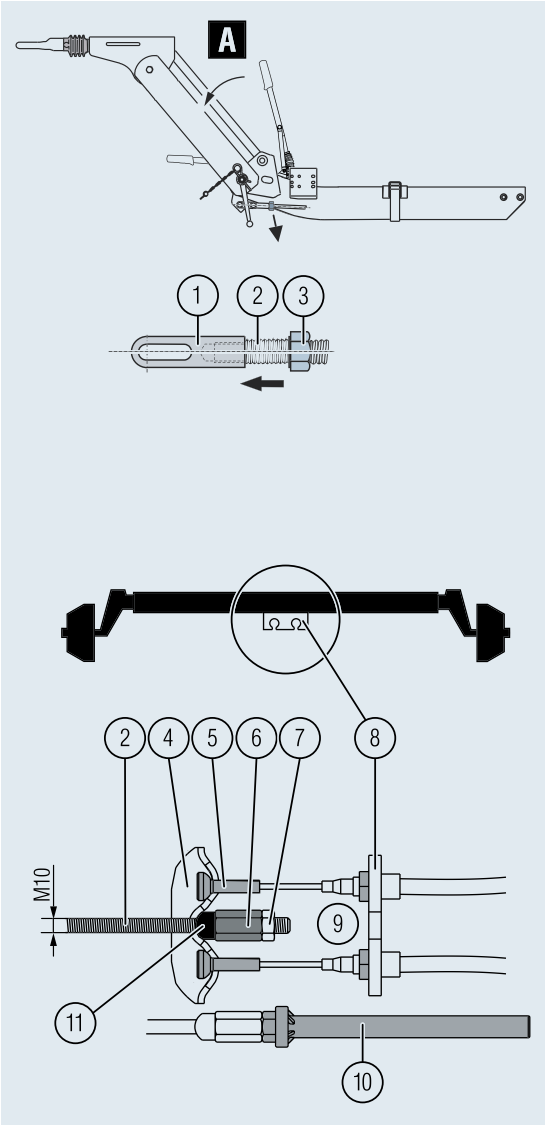

Version without spring accumulator incl. height-adjustable version

Type RB 3062, RB 3081

1. Mount height-adjustable overrun device with drawbar and axle on chassis.
2. Raise drawbar to the highest setting.
3. Release handbrake lever completely (A).
4. Pull out the overrun device's drawbar tube fully towards the front.
5. Screw brake rod (2) at least 15 mm into the articulated head (1) of the overrun device and lock with hex nut (3).
6. Pull brake rod backwards until relay lever makes contact.
   – The Bowden cable pull needs to be tight.
   – The relay lever in the overrun device needs to lie against the drawbar tube.
7. Hook the Bowden cable into the wheel brake.
8. Connect Bowden cables (8) with adapter bracket (9) and lock with hex nut M16x1.5 (10).
9. Connect brake rod (2) with compensation profile (7).
10. Pass Bowden cables (8) into the compensation profile (7).
11. Screw on ball nut M10 (14) and tighten.
    Lock with hex nut M10 (15).
12. Connect the spacer (16).
13. Screw long nut (6) onto brake rod (2) and tighten by hand.
14. Firmly apply and release the handbrake lever 3 times.
15. Turn the wheel forwards tightening the long nut (13) until brake resistance can be felt.
    The wheel needs to be turnable by hand in driving direction.
16. Lock long nut (13) with hex nut (12) or alternatively use brake rod holder (10).

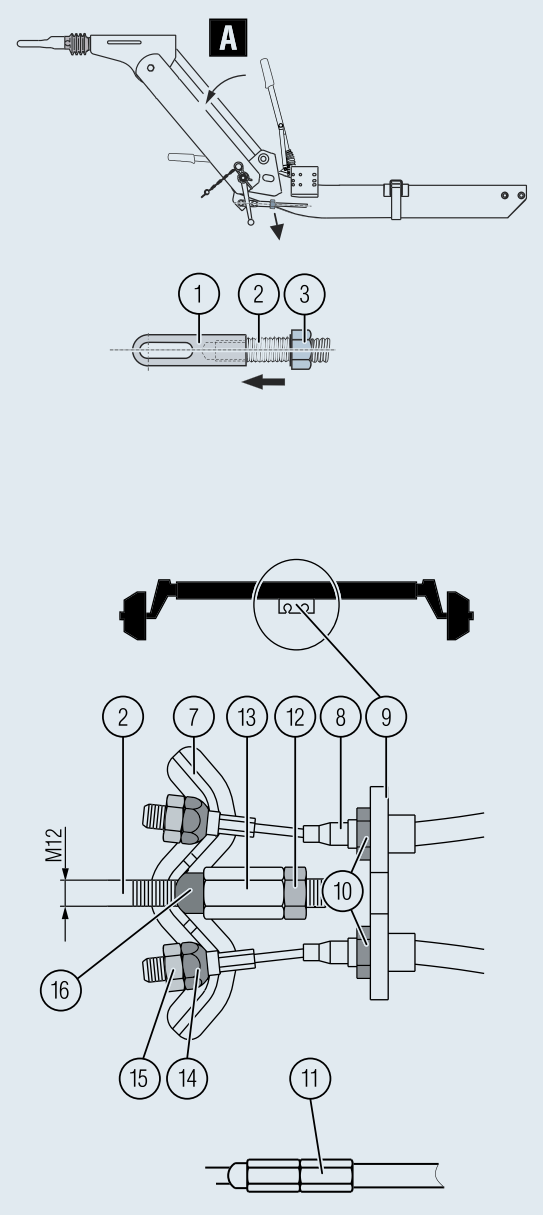

Tightening torques	
M 10	20 – 25 Nm
M 12	40 – 45 Nm
M 16	90 – 100 Nm

AL-KO brake rod holder	
Brake rod	Part no.
M 10	228827
M 12	28867601

NOTES

NOTES

ALOIS KOBER GMBH
Ichenhauser Str. 14
89359 Kötz
Germany
Fon +49 8221 97-0
info@alko-tech.com
www.alko-tech.com

AL-KO Kober Limited
South Warwickshire Business Park
Kineton Road, Southam, Warwickshire, CV47 0AL
United Kingdom
Phone: +44 (0)1926 818500
mail.uk@alko-tech.com
www.alko-tech.com/uk

Part No. 499692 – Subject to changes in response to technical progress.
No liability accepted for mistakes and printing errors. Edition 04/2018